FF. 931.210.105

DWG. NO. ELN 2020 SHEET NO. SK-S 106

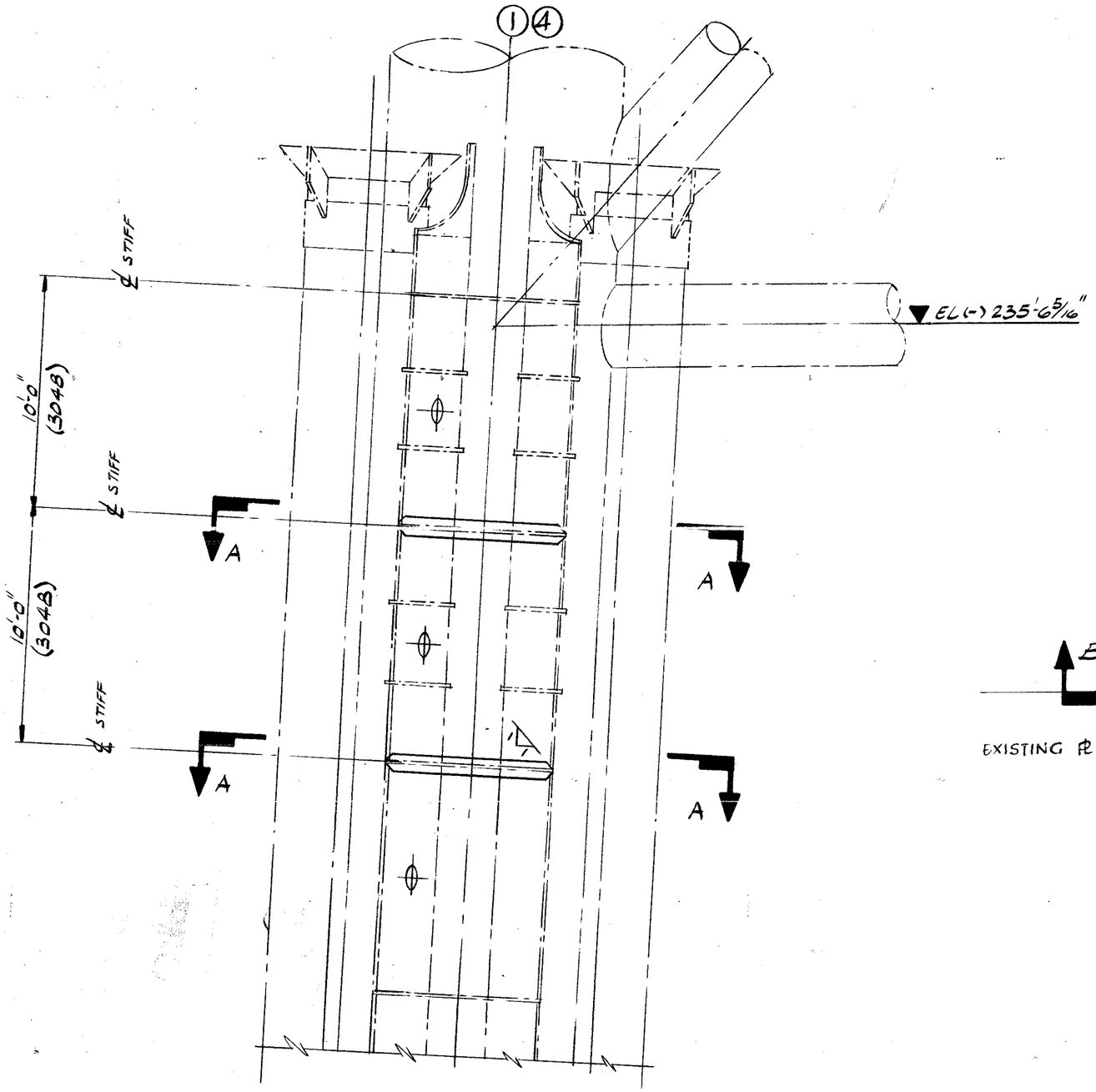


PART ELEVATION OF PILE SLEEVES
COL LINE 1 (COL LINE 4 SIM)
(SCALE 1/4" : 12")

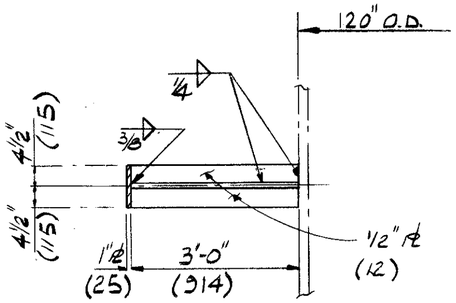


SECTION B-B
(SCALE 1/2" : 12")

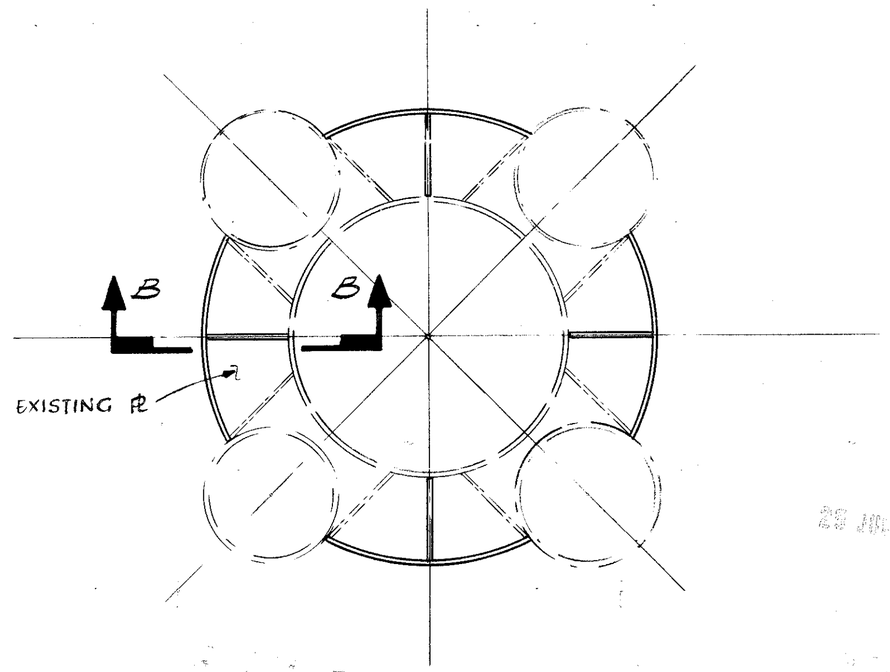


SECTION A-A
(SCALE 1/4" : 12")

elf norge a.s
dwg no: FF. 931.210.105
rev. : 0 date : 10.10.74
item:

| NO | BY | DATE | REVISION | DATE | CHK. | APP. |
|---|---|---|---|---|---|---|
| | | | | | | |

McDERMOTT — HUDSON
LONDON — ENGLAND

| DATE | DRAWN BY | APPROVED: |
|---|---|---|
| 31-MAY-74 | CAPhelps | |
| SCALE | CHECKED BY | APPROVED: |
| AS NOTED | | |

ELF-NORGE A.S. NORWAY
DRILLING PLATFORM Nº1
ADDITIONAL REINFORCEMENT TO BOTTLE LEGS.

DWG. NO. ELN 2020
SHEET NO. SK-S-106

GAF 4754/73