elf aquitaine norge a/s

CDP 1

SUBSEA

AS BUILT FILE

10/1

JERNBETON-DORIS

ELF AQUITAINE NORGE A/S

FRIGG FIELD

CONCRETE DRILLING PLATFORM

C.D.P. 1

SUMMARY OF STEEL ITEMS EMBEDDED IN CONCRETE TO BE CHECKED ON PLATFORM

Document N° STA B.1049
Rev.1 - February 1984

TABLE OF CONTENTS

		Page
A -	GENERALITES	1
B -	IMPORTANT NOTES	2
C -	DETAILED SCOPE OF WORK	3
	PART I	
	PART II	
	PART III	

A - GENERALITES

- During a meeting held in E.A.N. offices on the 6th of December 1983, it has been discussed the necessity to make a document which will summarized all steel items embedded in concrete (base plates, ladders, supports, guides, pad-eyes, etc...) where there is a doubt about presence or present condition.

- The aim of this document is to help E.A.N. and the diving company contracted to carried out maintenance works on the platform.

  At present time the document will help EAN/OCD people to plan their inspection programme for the 1984 diving season.

- This document is made in relation with another document called "As Built Drawings for CDP 1 Platform" now under completion.

B - IMPORTANT NOTES

- Steel items to be inspected are clearly shown on sketch with colored pen marks.

- Detail of steel items are also given for information at the end of each part.

- All additional steel items not shown or omitted on the sketches must be reported in order to update the final as built drawing.

C - DETAILED SCOPE OF WORK

This document is splitted in three parts :

PART I

Inspection outside breakwater wall for all cells A.B.C.D.E.F. from top of breakwater wall down to construction joint at level -31.335 M.L.W.

- Inspection can be done visually and reported.
- Still pictures can be taken.
- Measurement can be taken (sketches to be issued).
- Inspection on outside B.W.W. can be done from a diving vessel or a zodiac boat.

PART II

Inspection inside breakwater wall for all cells A.B.C.D.E. and F. from top of breakwater wall down to solid ballastat level -40 m M.L.W.

- This inspection can be carried out from the diving module.
- Diving inspection report.
- Still pictures can be taken.

PART III

Inspection inside all cells A.B.C.D.E. and F, from the top of breakwater wall down to solid ballast at -40 m M.L.W.

- This inspection can be carried out from the diving module.
- Diving inspection report.
- Still picture to be taken.

JERNBETON-DORIS

- PART I -

INSPECTION OUTSIDE BREAKWATER WALL FOR ALL CELLS A.B.C.D.E.F., FROM TOP OF BREAKWATER WALL DOWN TO CONSTRUCTION JOINT AT LEVEL -31.335 M M.L.W.

Document N° STA B.1049
Rev.1 - February 1984

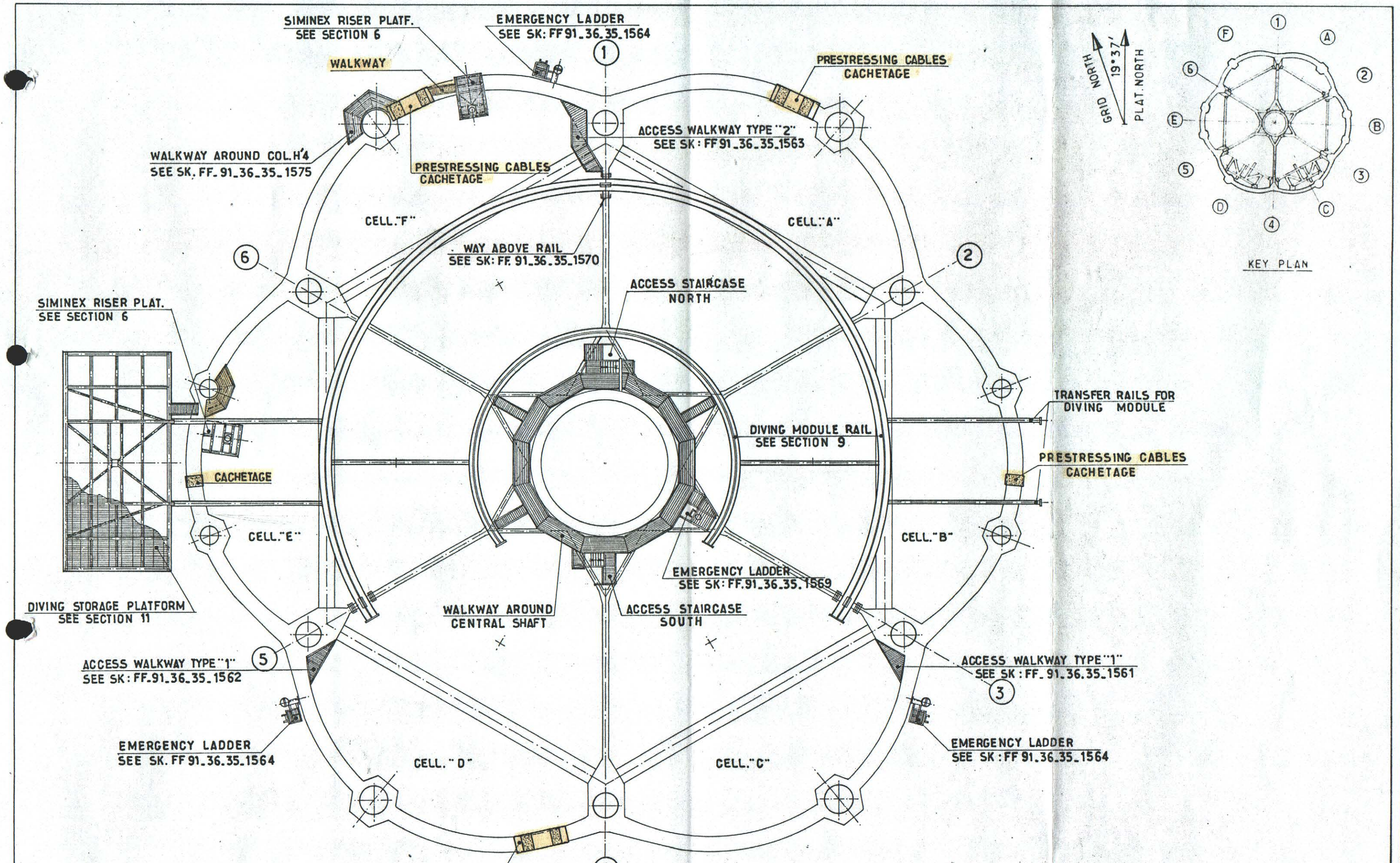

NOTE: FOR HANDRAIL GENERAL ARRANGEMENT
SEE SK: FF 91_36_35_1576

Rev.	Date	DESCRIPTION	by	app.
1	12/83	UPDATED	mira	J.L.C

Contractor JVD 1029. 70. 01

elf aquitaine norge a/s
p.o.box 168
4001 Stavanger

elf
FRIGG FIELD

Job no.	Installation	System
	CDP 1	UNDERWATER
Scale 1:250	GENERAL ARRANGEMENT ON TOP OF BREAKWATER WALL _ LEV. + 107.00 m.	
Dwgr. no FF 91_36_35_1560	1	

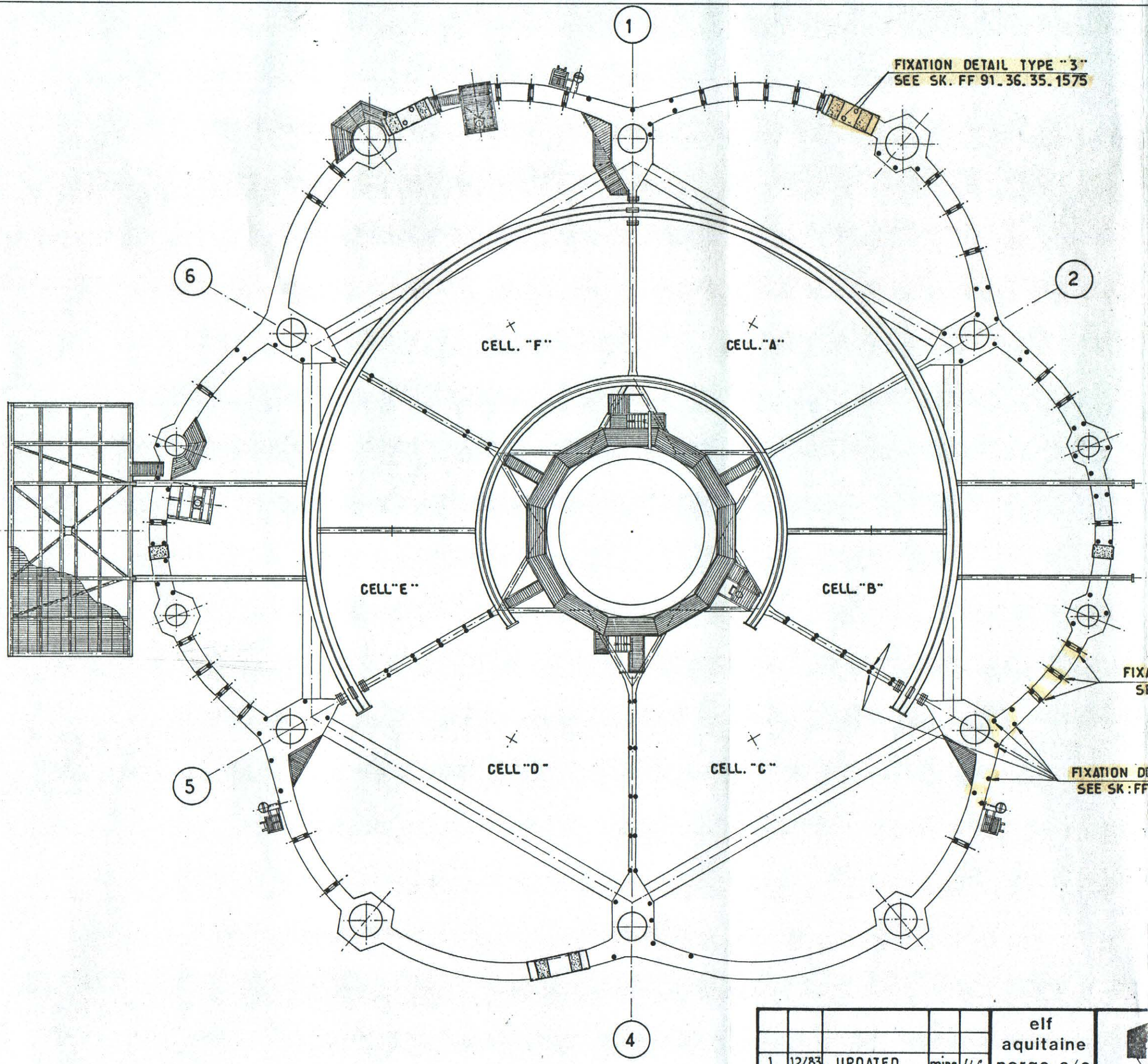

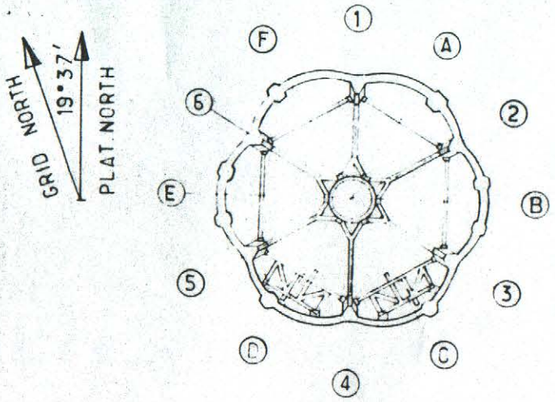

KEY PLAN

LEGENDE :

- ● - DETAIL "1"
- ▭ - DETAIL "2"
- ○ - DETAIL "3"

NOTE : SEE GENERAL COMMENTS IN PARAGRAPH III

Rev.	Date	DESCRIPTION	by	app.
1	12/83	UPDATED	miro	JLC

Contractor JVD 1029. 70_13

elf aquitaine norge a/s
p.o.box 168
4001 Stavanger

elf
FRIGG FIELD

Job no.	Installation	System
	CDP 1	UNDERWATER
Scale —	HANDRAIL GENERAL ARRANGEMENT ON TOP OF BREAKWATER WALL (107.00m)	
Dwgr. no FF 91_36_35_1572	1	—

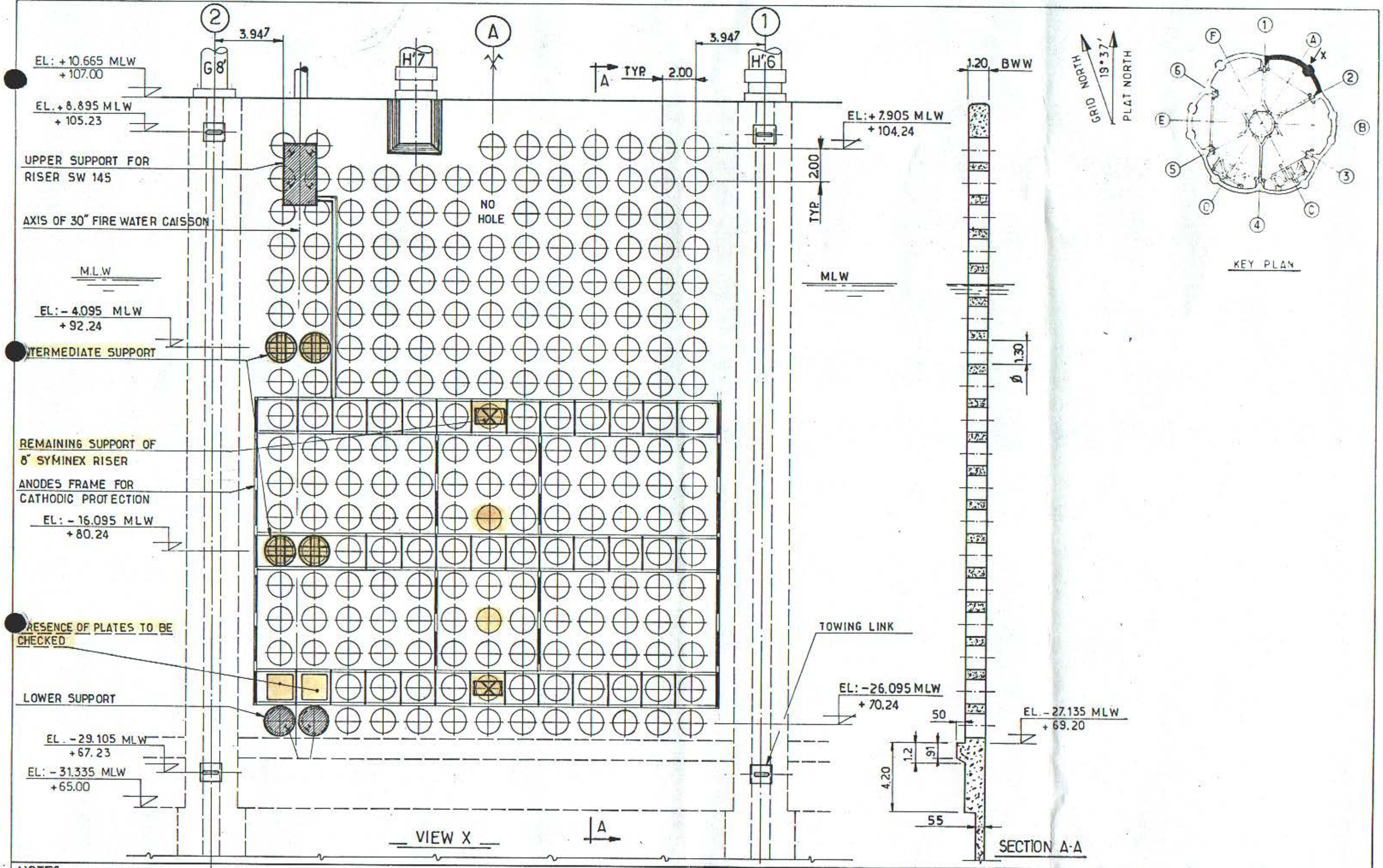

NOTES

UPPER SUPPORT RISER SW 145	SEE SK. FF 91-36-35-1514	
INTERM. SUPPORT " "	"	"HOLD" NO CONST. DRG. FOUND.
LOWER SUPPORT " "	"	1515
ANODES FRAME	"	1611
SYMINEX RISER	"	1549
TOWING LINK	"	1152

Rev.	Date	DESCRIPTION	by	app
1	16.83	UPDATED	HLC	HLC

Contractor JVD 1029 · 30 · 06

elf aquitaine norge a/s
p.o.box 168
4001 Stavanger

elf
FRIGG FIELD

Job no.	Installation	System
	CDP 1	UNDERWATER
Scale 1: 200	BREAK WATER WALL — CELL A — DEVELOPED EXTERNAL VIEW	
Dwgr. no FF 91-36-35-1135	Rev. 1	Sheet /

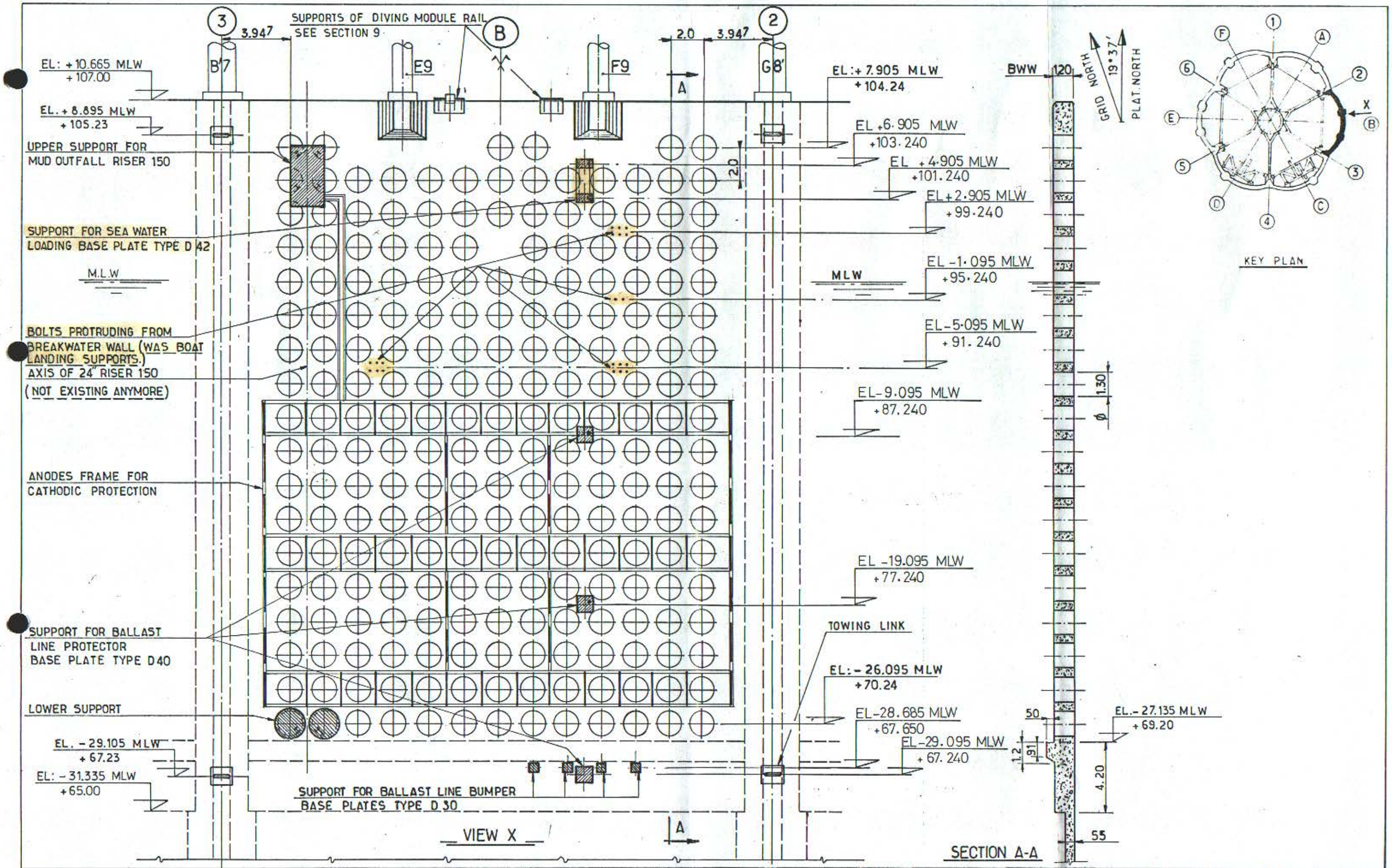

NOTES

RISER 150 SUPPORTS	SEE SK. FF.91.36.35-1524
SEA WATER LOADING SUPPORT	" 1153
BALLAST LINE PROTECTION SUPPORT	" 1154.1155
ANODES FRAME	" 1612
BALLAST LINE BUMPER	DOESNOT EXIST ANYMORE
TOWING LINK	FF 91.36.35.1152
BALLAST LINE PIPE DOESN'T EXIST ANYMORE.	

Rev.	Date	DESCRIPTION	by	app.
1	10.83	UPDATED	J.LC	J.LC

Contractor JVD 1029.30.07

elf aquitaine norge a/s
p.o.box 168
4001 Stavanger

elf
FRIGG FIELD

Job no.	Installation	System
	CDP 1	UNDERWATER
Scale 1:200	BREAK WATER WALL — CELL B — DEVELOPED EXTERNAL VIEW	
Dwgr. no FF 91-36-35-1136	Rev. 1	Sheet

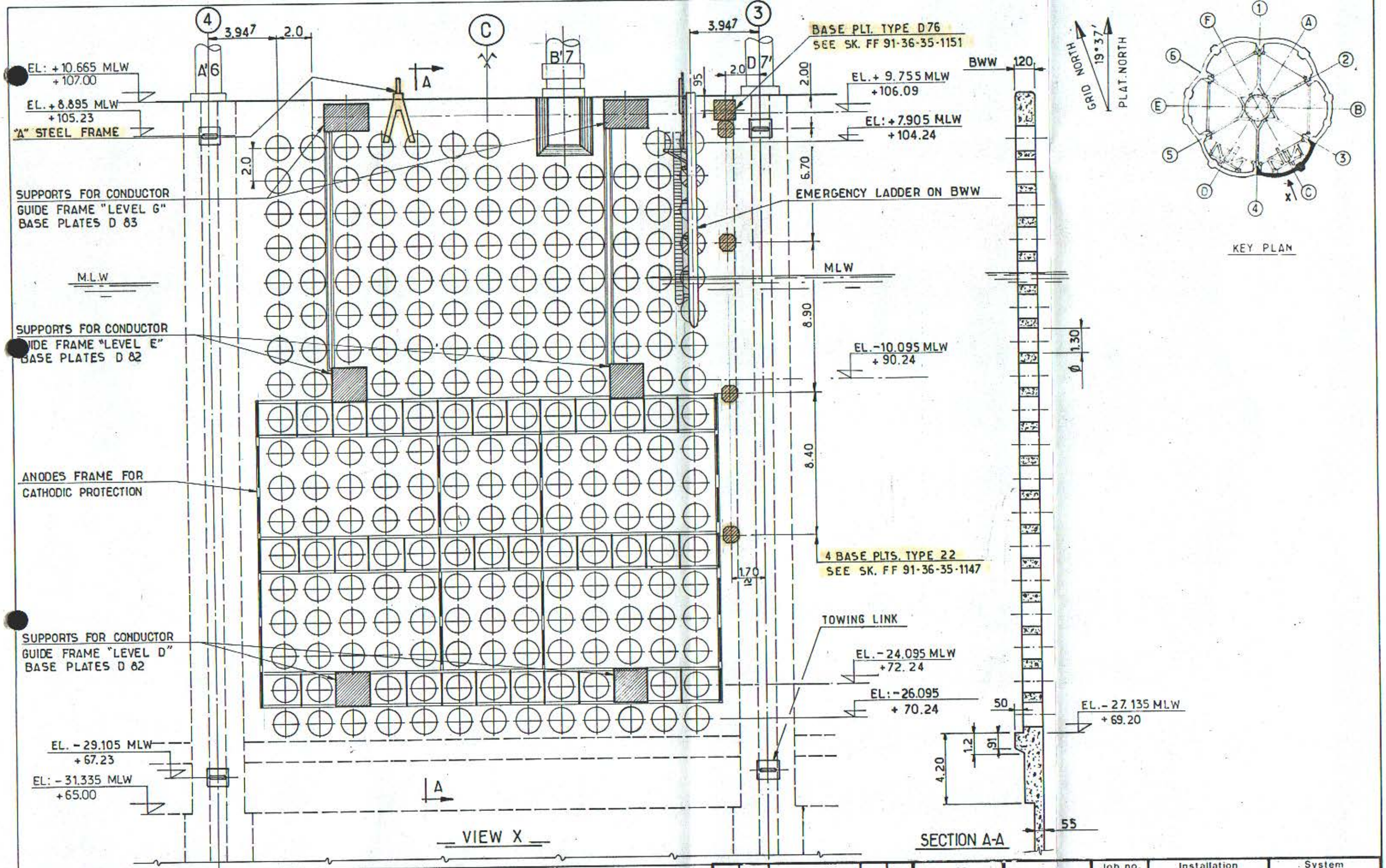

NOTES

FOR TOWING LINK	"	1152
SUPPORTS LEVEL G	SEE SK. FF 91-36-35	-1160.1161
" LEVEL E	"	1160.1161
" LEVEL D	"	1160-1161
ANODES FRAME	"	1613
LADDER ON BWW	"	1564 to 1568
"A" STEEL FRAME	DRAWING DETAIL AND PURPOSE TO BE PROVIDED.	

Rev.	Date	DESCRIPTION	by	app.
1	10-83	UPDATED	MC	MC

Contractor JVD 1029 30 08

elf aquitaine norge a/s
p.o.box 168
4001 Stavanger

elf
FRIGG FIELD

Job no.	Installation	System
	CDP 1	UNDERWATER
Scale 1: 200	BREAK WATER WALL — CELL C — DEVELOPED EXTERNAL VIEW	
Dwgr. no FF 91-36-35-1137	Rev. 1	Sheet /

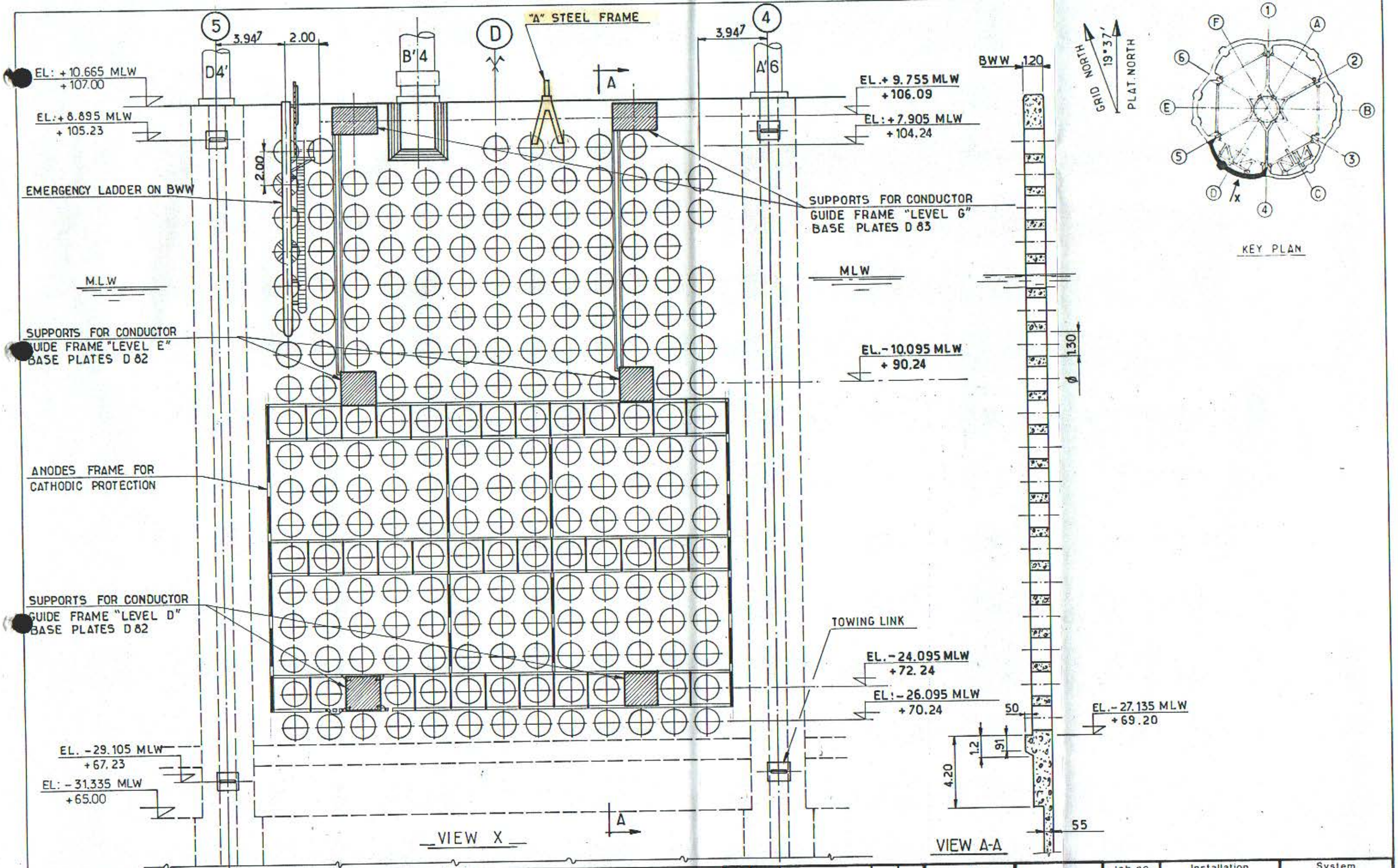

NOTES

TOWING LINK ——— " ——— 1152
SUPPORTS LEVEL G ——— SEE SK. FF 91-36-35 -1160 . 1161
——"—— LEVEL E ——— " ——— -1160 . 1161
——"—— LEVEL D ——— " ——— -1160 . 1161
ANODE FRAME ——— " ——— -1614
LADDER ON BWW ——— " ——— -1564 to 1568
"A" STEEL FRAME ——— DRAWING DETAIL AND PURPOSE TO BE PROVIDED.

Rev.	Date	DESCRIPTION	by	app.
1	10-83	UPDATED	J.L.	J.L.

Contractor JVD 1029 - 30-09

elf aquitaine norge a/s
p.o.box 168
4001 Stavanger

elf
FRIGG FIELD

Job no.	Installation	System
	CDP 1	UNDERWATER
Scale 1: 200	BREAK WATER WALL — CELL D — DEVELOPED EXTERNAL VIEW	
Dwgr. no FF 91-36-35-1138	Rev. 1	Sheet

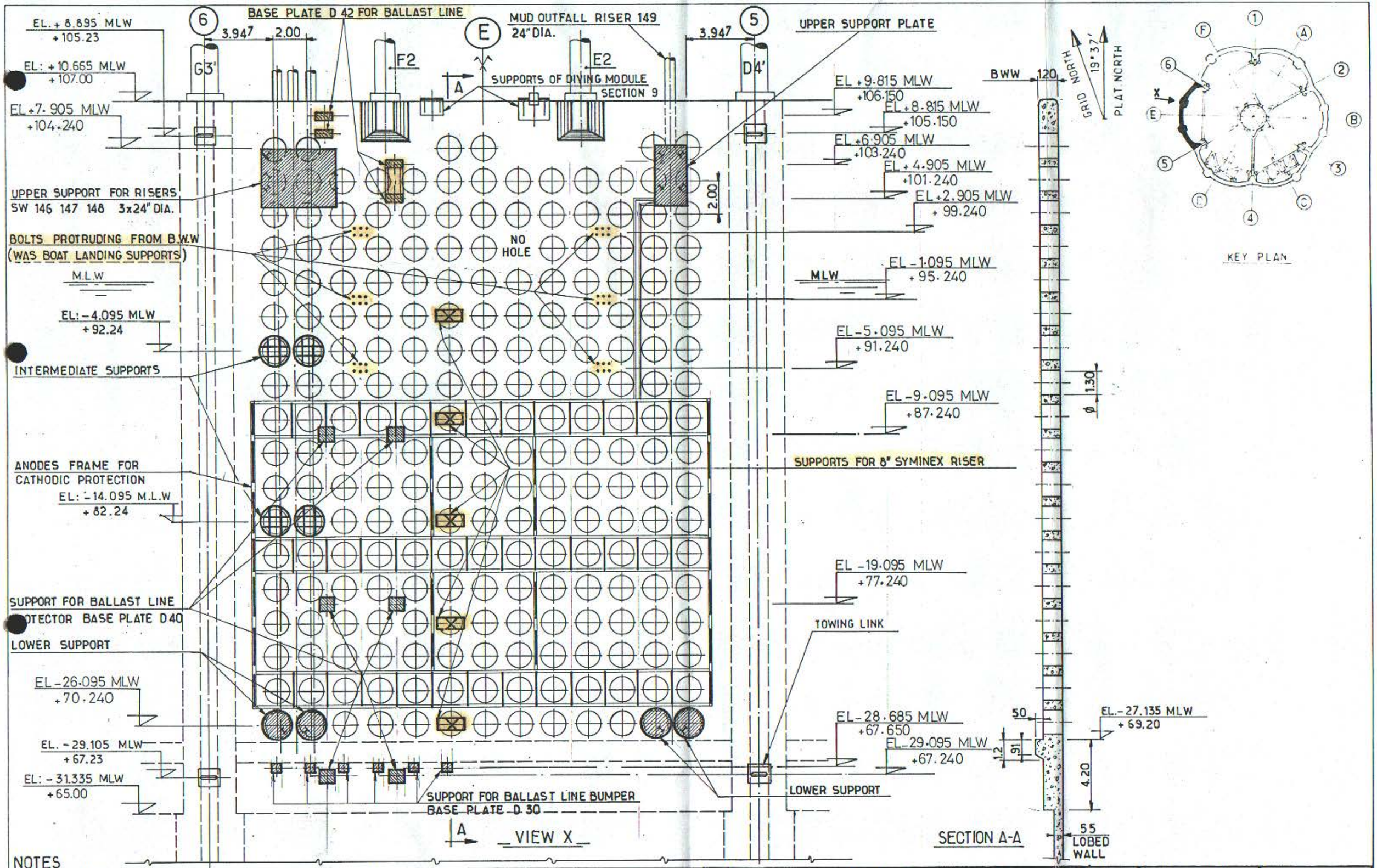

NOTES

TOWING LINK — " — 1152
SYMINEX RISER SUPPORTS — SEE SK FF-91-36-35-1548.1551 to 1553
RISERS SW 146 147 148 SUPPORTS — " — 1519 to 1523
RISER 149 SUPPORTS — " — 1526.1527
BALLAST LINE SUPPORTS — " — 1154.1155
BASE PLATES D 30.40.42 — " — 1148.1149.1150
ANODES FRAME — " — 1615

BALLAST LINE PIPES DON'T EXIT ANYMORE.

Rev.	Date	DESCRIPTION	by	app
1	10-83	UPDATED	JLC	JLC

Contractor JVD 1029 - 30-10

elf aquitaine norge a/s
p.o.box 168
4001 Stavanger

elf
FRIGG FIELD

Job no.	Installation	System
	CDP 1	UNDERWATER

Scale 1: 200

BREAK WATER WALL — CELL E —
DEVELOPED EXTERNAL VIEW

Dwgr. no FF 91-36-35-1139 | Rev. 1 | Sheet

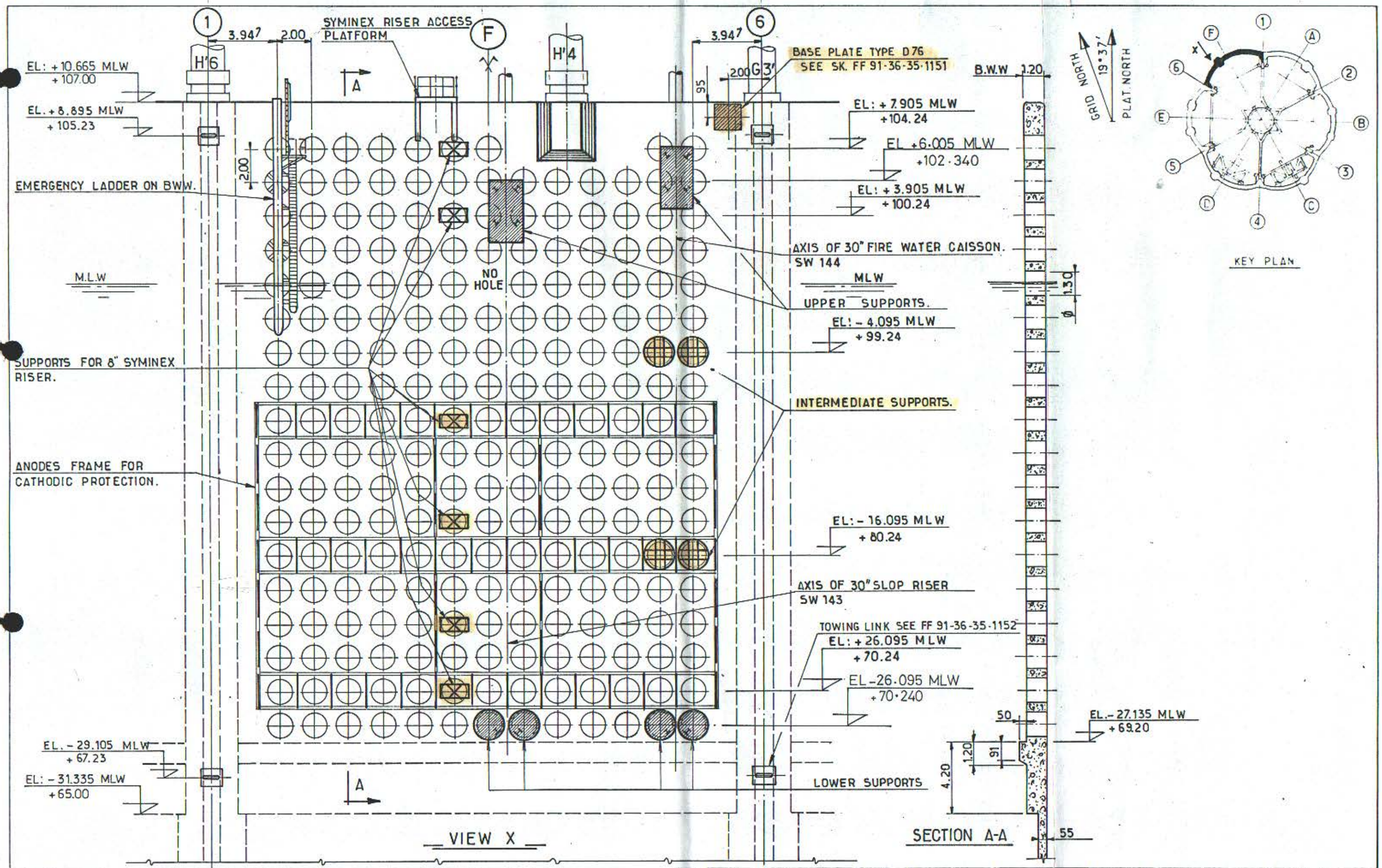

NOTES
- SUPPORTS FOR RISERS SW 143-144 — SEE SK FF 91-36-36-1507 to 1510
- INTERMEDIATE SUPPORT SW 144 — " — "HOLD" NO DRG. FOUND.
- SYMINEX SUPPORTS — " — 1549 to 1553
- SYMINEX PLATFORM — " — 1546
- LADDER ON BBW — " — 1564 to 1568
- ANODES FRAME — " — 1616

SYMINEX PIPE RISER DOEN'T EXIST ANYMORE AS WELL AS LOWER PART OF SLOP RISER.

Rev.	Date	DESCRIPTION	by.	app.
1	10.83	UPDATED	J-L.C	J-L.C

Contractor JVD 1029-30-1.1

elf aquitaine norge a/s
p.o.box 168
4001 Stavanger

elf
FRIGG FIELD

Job no.	Installation	System
	CDP 1	UNDERWATER
Scale 1:200	BREAK WATER WALL — CELL F — DEVELOPED EXTERNAL VIEW	
Dwgr. no FF 91-36-35-1140	Rev. 1	Sheet /

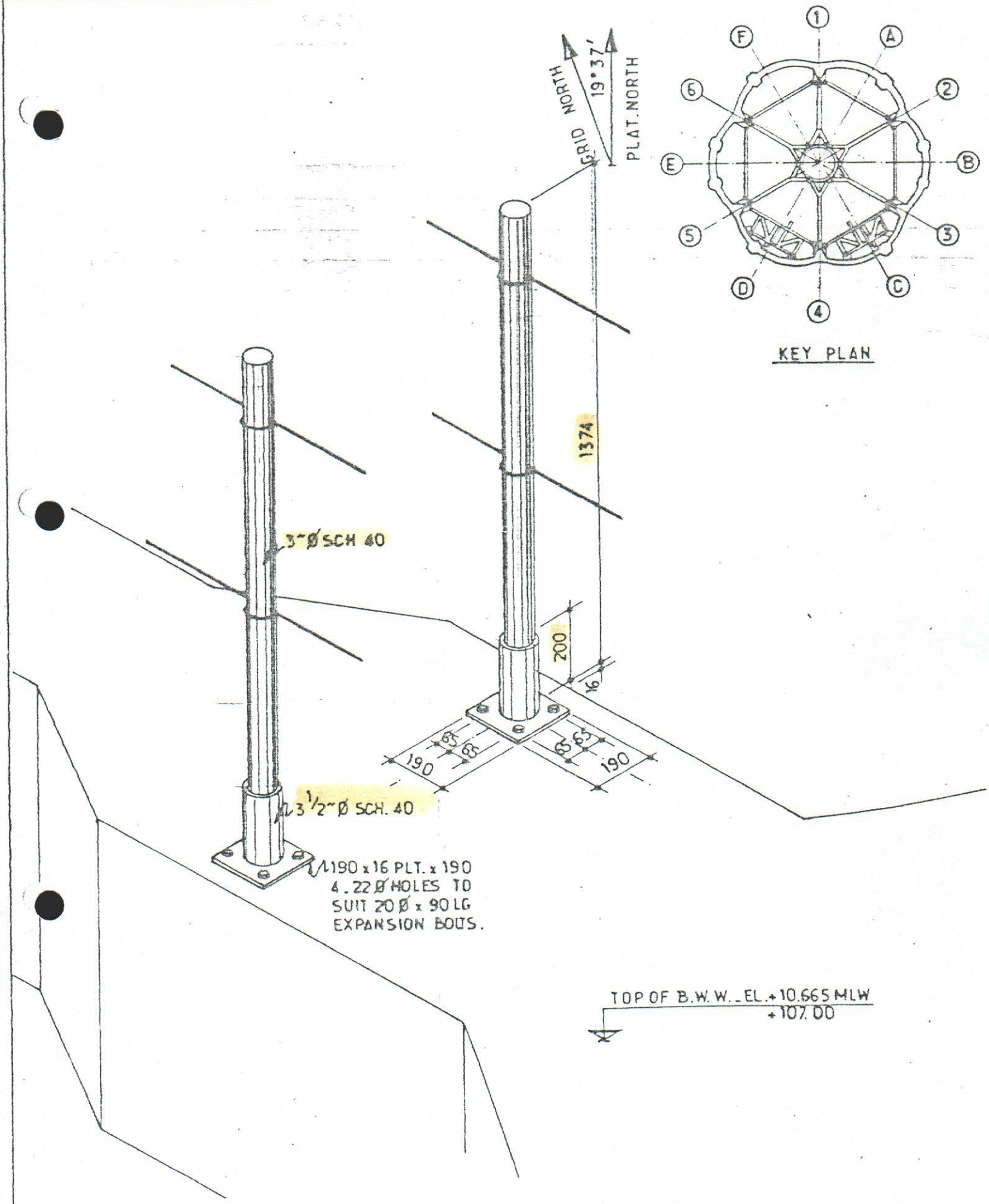

NOTES : FOR LOCATION SEE SK. FF 91_36_35_1576

Rev.	Date	DESCRIPTION	by	app.
12/83		UPDATED	m.	

Contractor JVD 1029.70.18

elf aquitaine norge a/s
p.o.box 168
4001 Stavanger

elf
FRIGG FIELD

Job no.	installation CDP 1	System UNDERWATER
Scale —	HANDRAIL FIXATION DETAIL TYPE 1	
Dwgr. no. FF 91_36_35_1577	Rev. 1	Sheet —

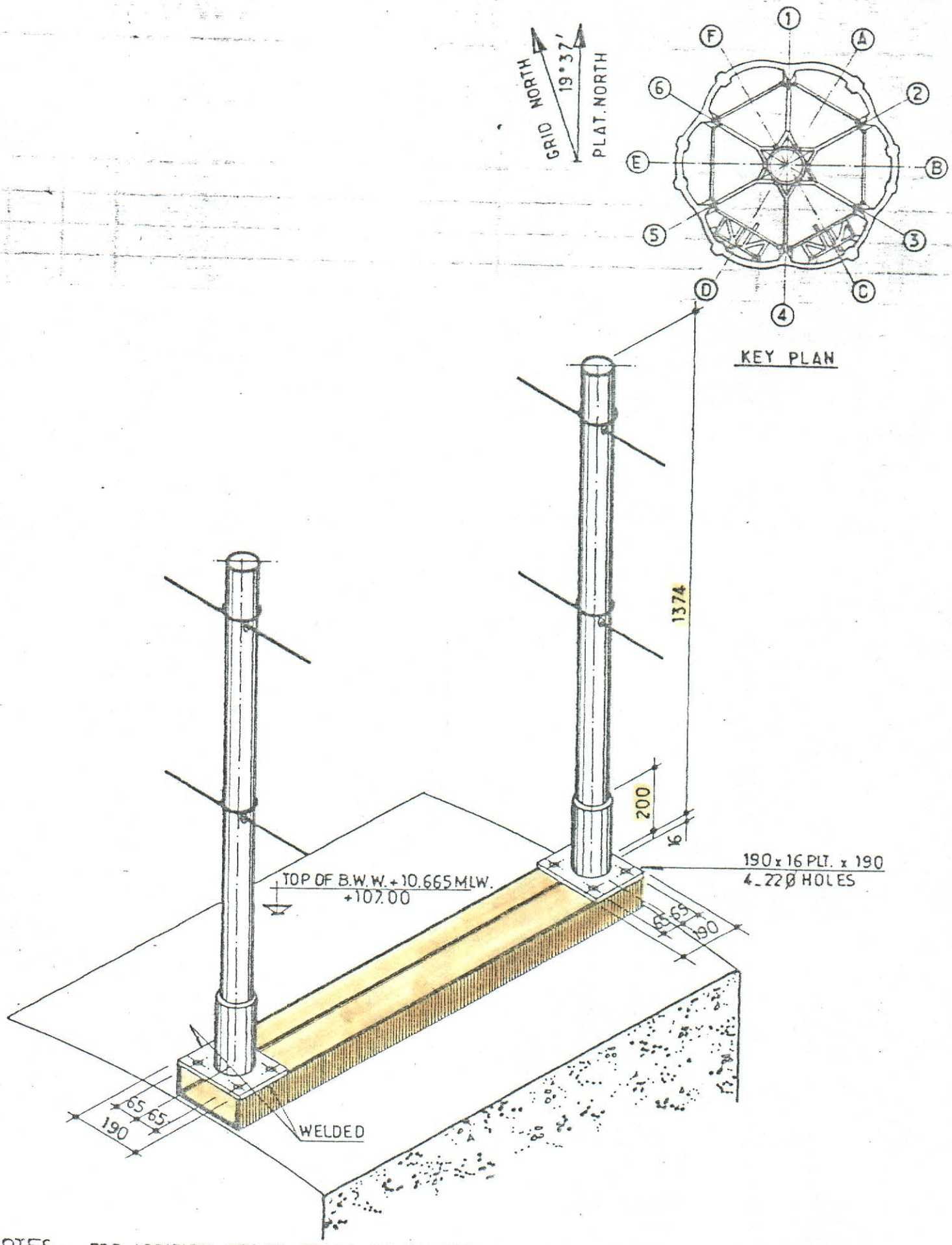

NOTES :- FOR LOCATION SEE SK. FF_91_36_35_1576

Rev.	Date	DESCRIPTION	by	app.
	12/83	UPDATED	m.	

Contractor JVD 1029. 70. 19

elf aquitaine norge a/s
p.o.box 168
4001 Stavanger

elf

FRIGG FIELD

Job no.	Installation	System
	CDP 1	UNDERWATER
Scale —	HANDRAIL FIXATION DETAIL TYPE 2	
Dwgr. no. FF 91_36_35_1578	Rev 1	Sheet —

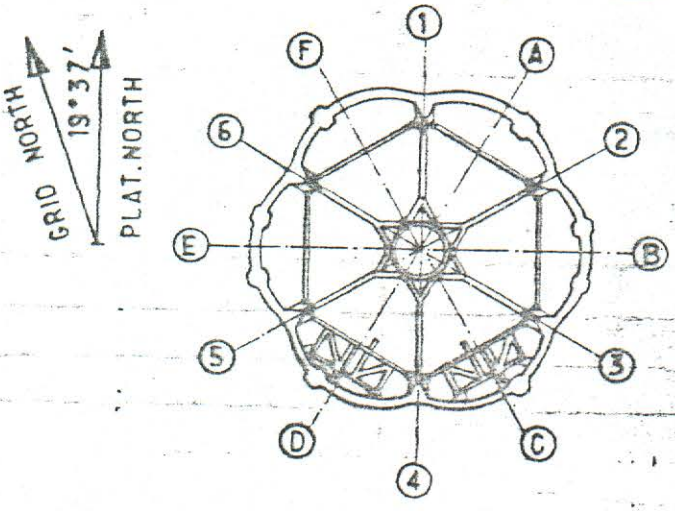

KEY PLAN

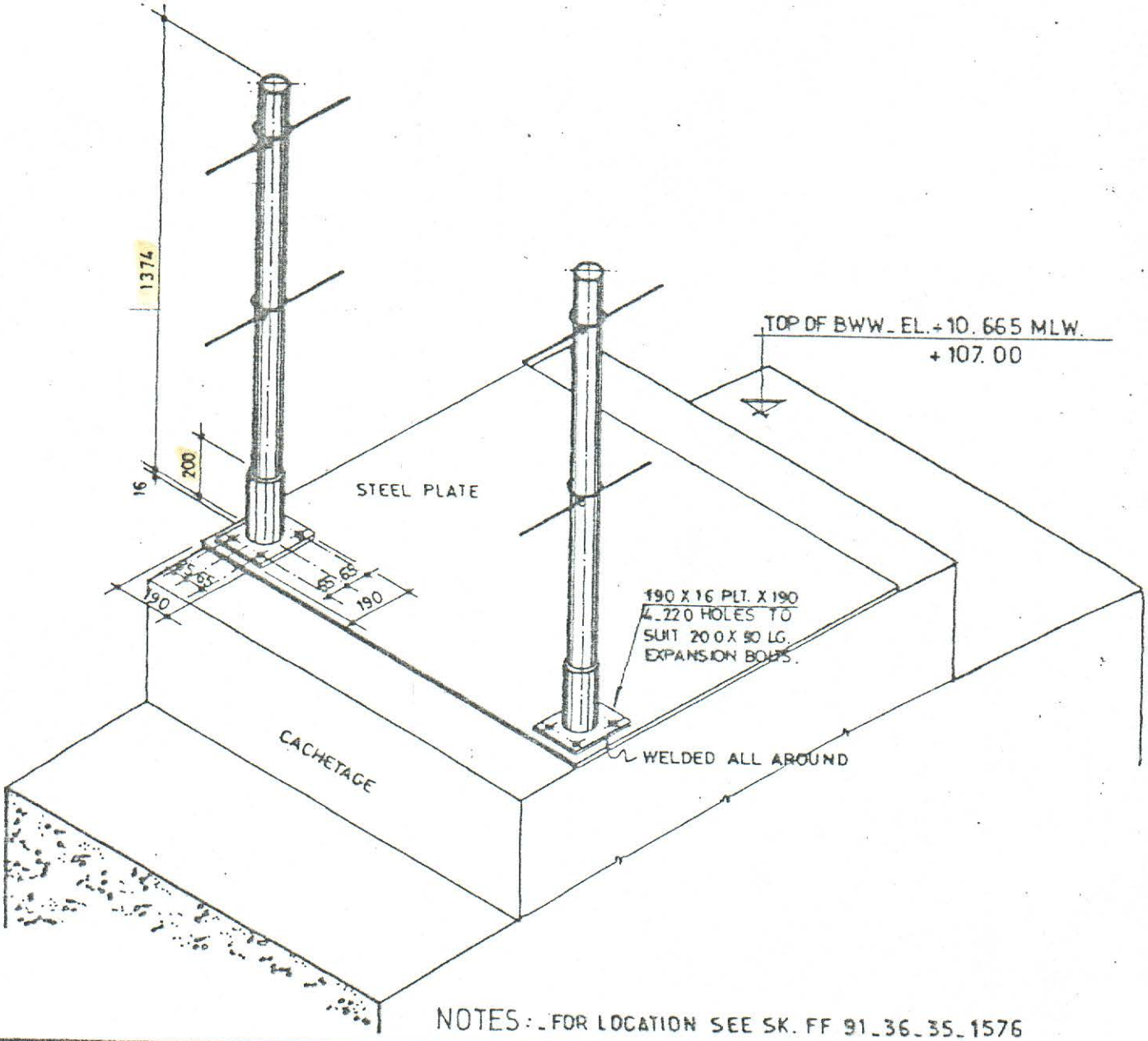

NOTES:- FOR LOCATION SEE SK. FF 91_36_35_1576

Rev.	Date	DESCRIPTION	by	app.
	12/83	UPDATED	m.	

Contractor JVD 1029. 70. 20

elf aquitaine norge a/s
p.o.box 168
4001 Stavanger

elf

FRIGG FIELD

Job no.	Installation	System
	CDP 1	UNDERWATER
Scale /	HANDRAIL FIXATION DETAIL TYPE 3	
Dwgr. no. FF 91_36_35_1579	Rev 1	Sheet /

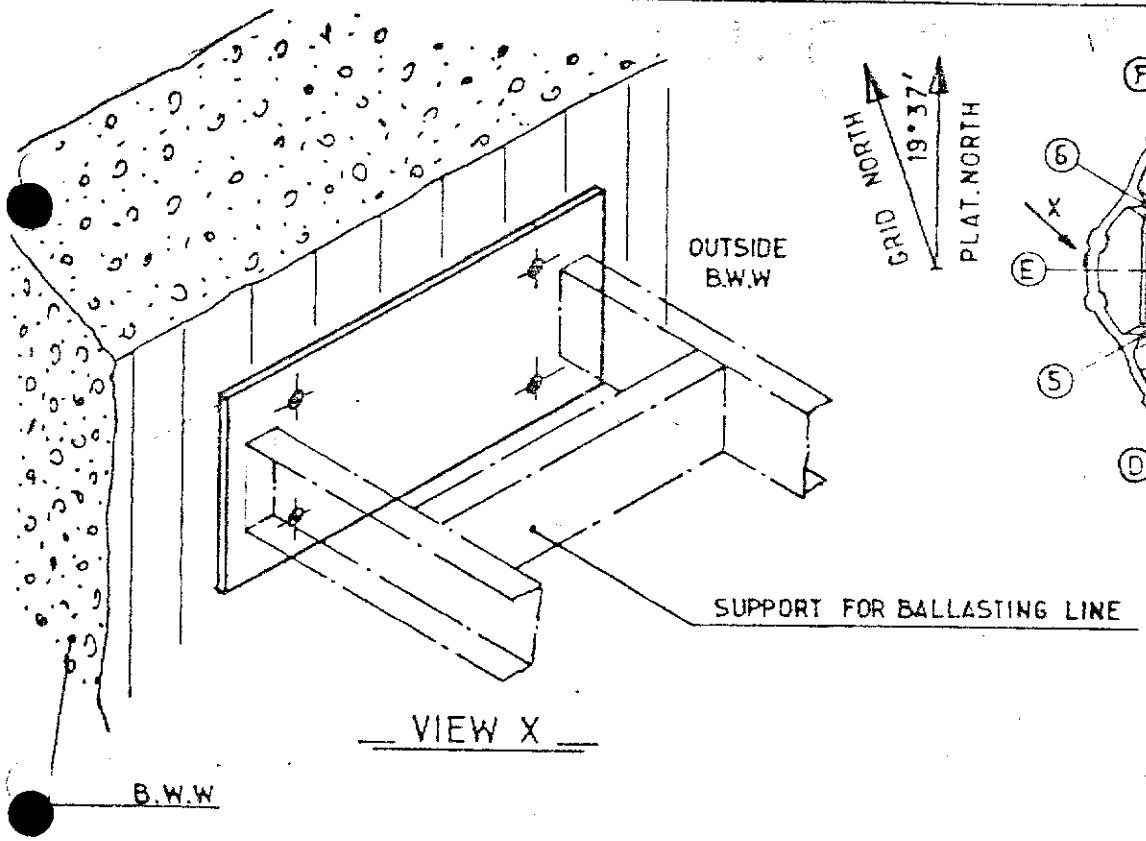

VIEW X

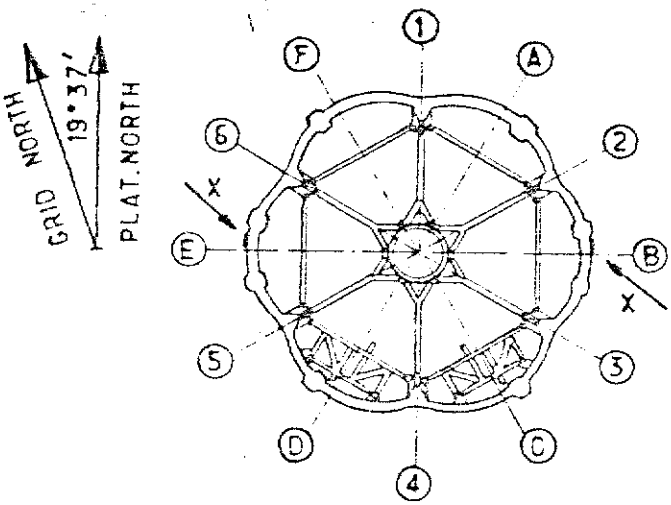

KEY PLAN

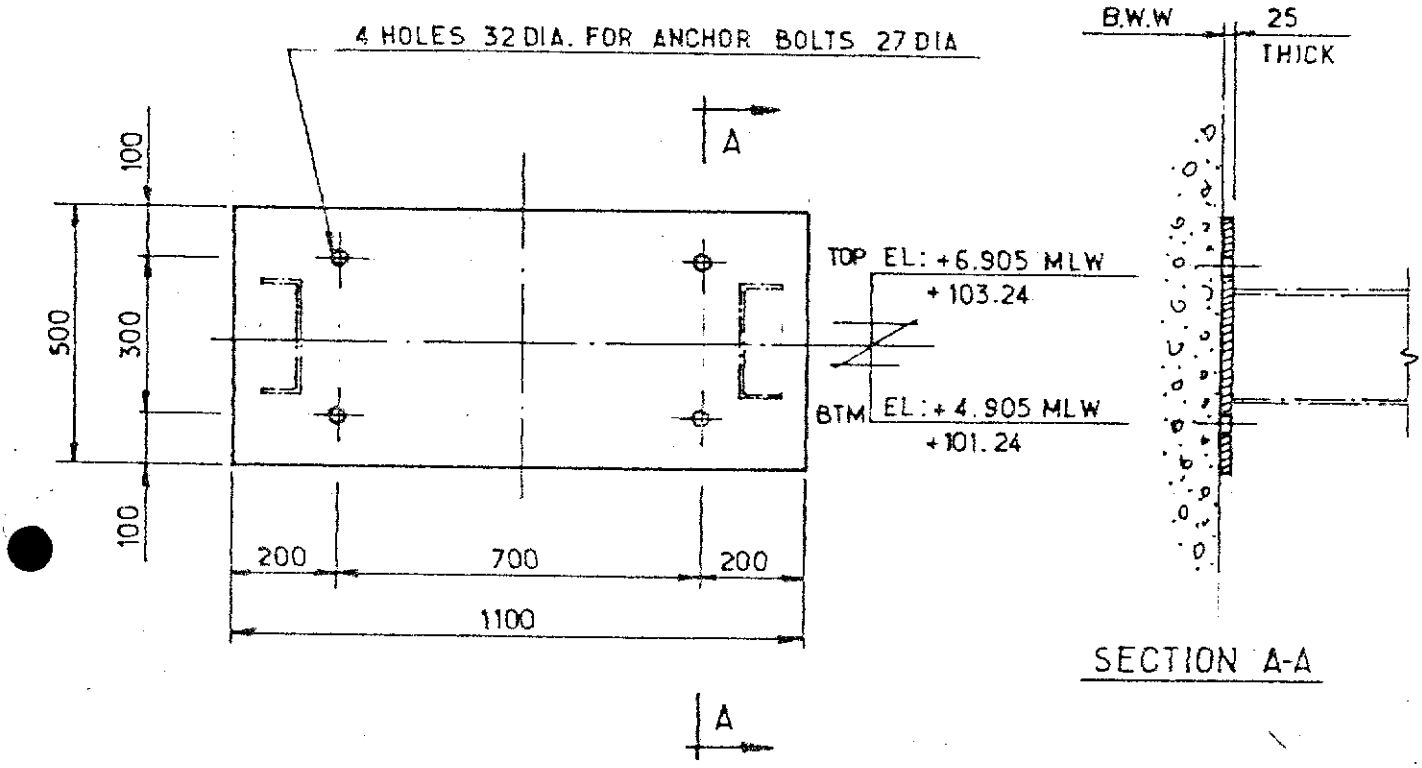

SECTION A-A

NOTES

FOR ANCHOR BOLT ———— SEE SK. FF 91-36-35-1320
FOR SUPPORT OF BALLASTING LINE SEE ——— " ——— 1153
FOR LOCATION OF PLATE ——— " ——— 1136, 1139

Rev.	Date	DESCRIPTION	by	app.
1	11-83	REDRAWN	HC	HC

Contractor JVD 1029-30-21

elf aquitaine norge a/s
p.o.box 168
4001 Stavanger

elf
FRIGG FIELD

Job no.	Installation	System
	CDP 1	UNDERWATER
Scale	BASE PLATE TYPE D 42 FOR SUPPORT OF BALLASTING LINE	
Dwgr. no. FF 91-36-35-1150	Rev 1	Sheet

Form 100 J18

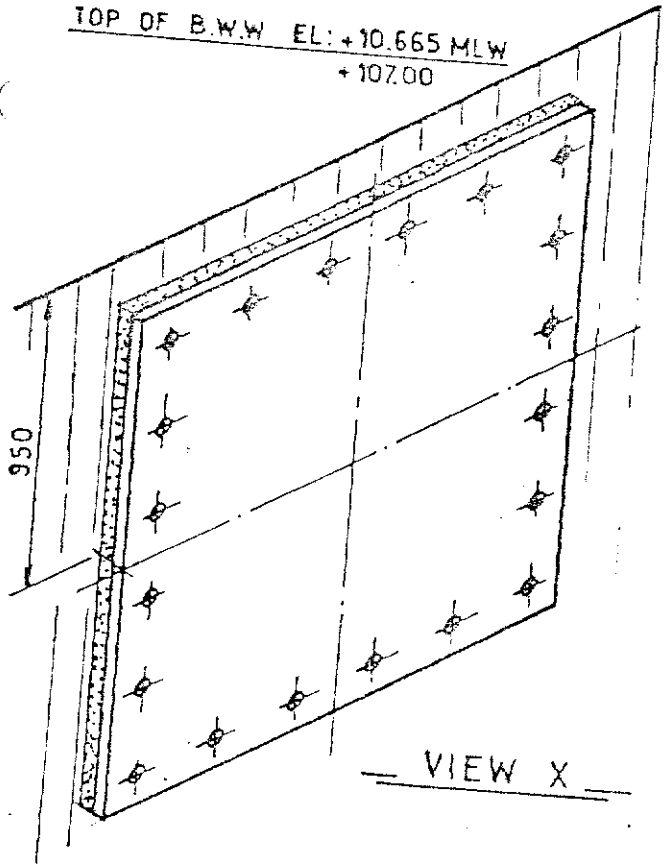

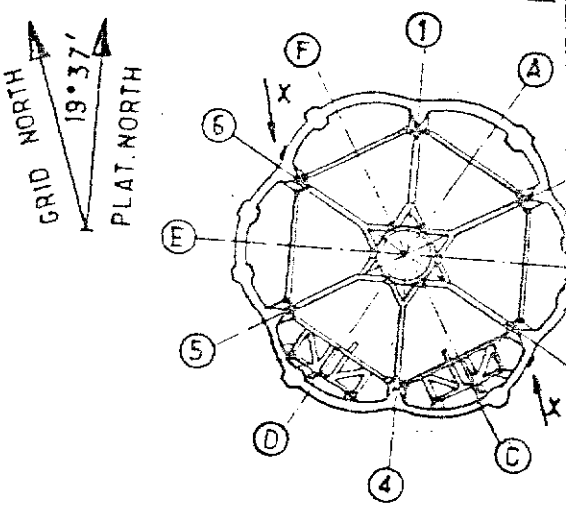

KEY PLAN

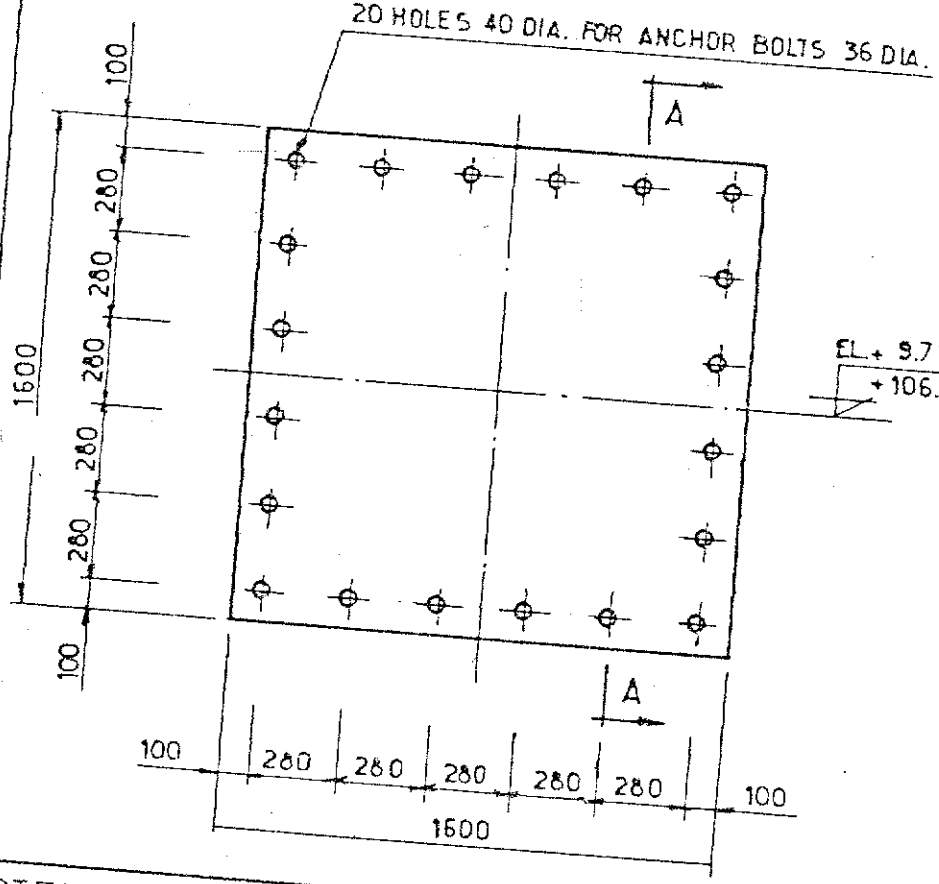

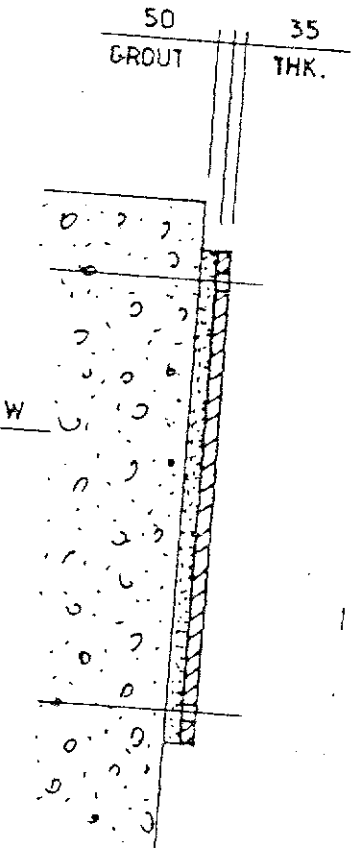

SECTION A-A

NOTES

FOR LOCATION ——— SEE SK. FF 91-36-35-1137, 1140
FOR ANCHOR BOLT DTL. ——— " ——— 1320

PRESENCE OF PLATE TO BE CHECKED (2 N°)

Rev.	Date	DESCRIPTION	by	app.
1	12-83	REDRAWN	J.L.L.	J.L.L.

Contractor JVD 1029 30 21

elf aquitaine norge a/s
p.o.box 168
4001 Stavanger

elf

Job no.	Installation	System
	CDP 1	UNDERWATER
Scale 1:25	BASE PLATE TYPE D 76 FOR SUPPORT OF SAND BALLASTING	
Dwgr. no.		

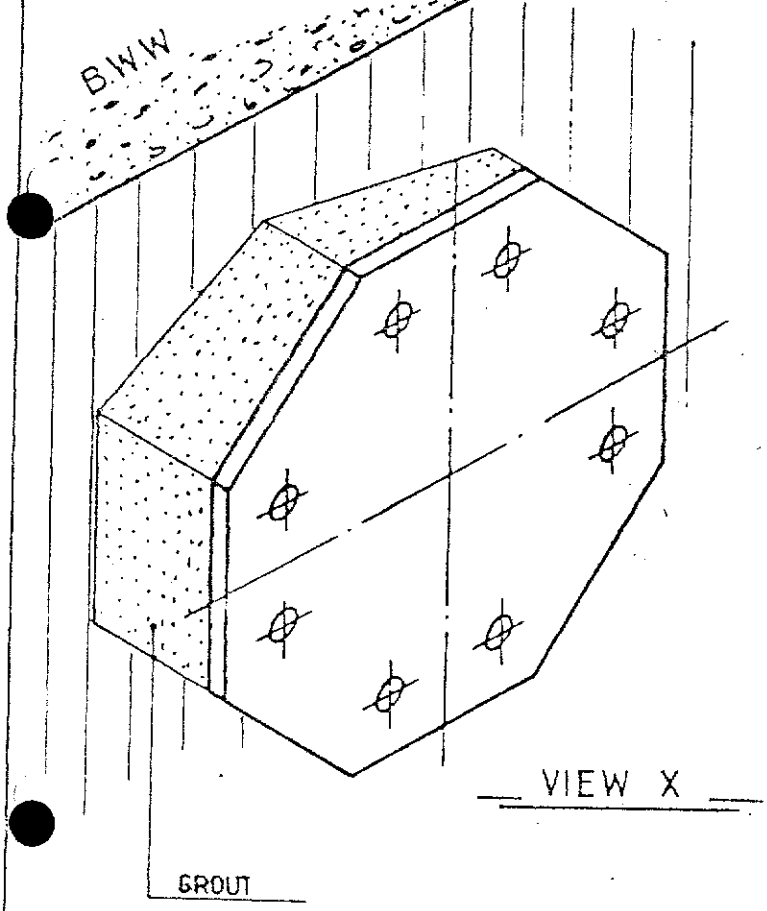

VIEW X

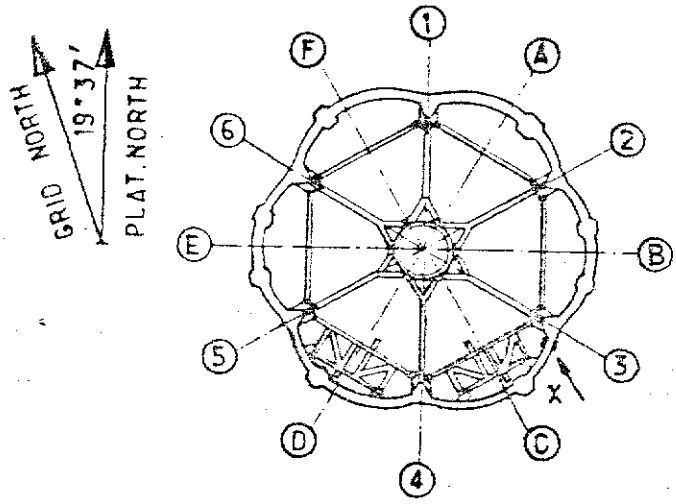

KEY PLAN

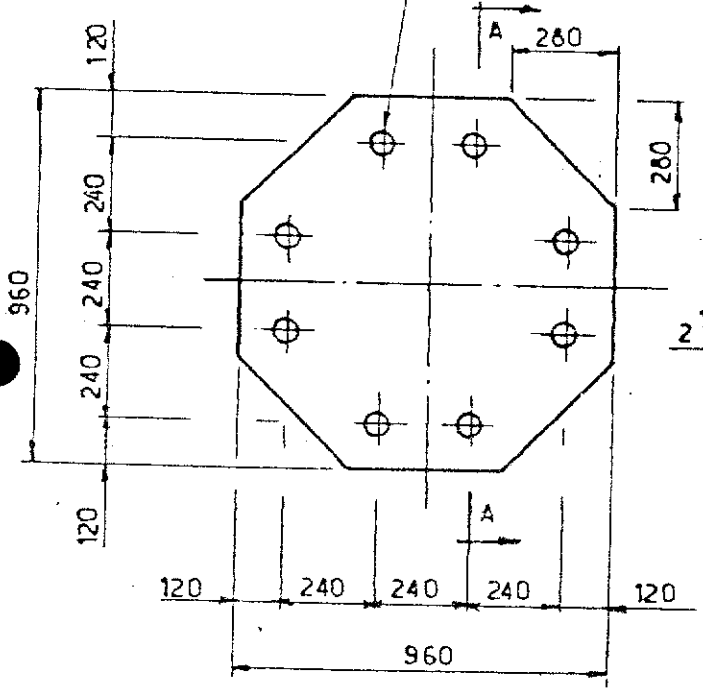

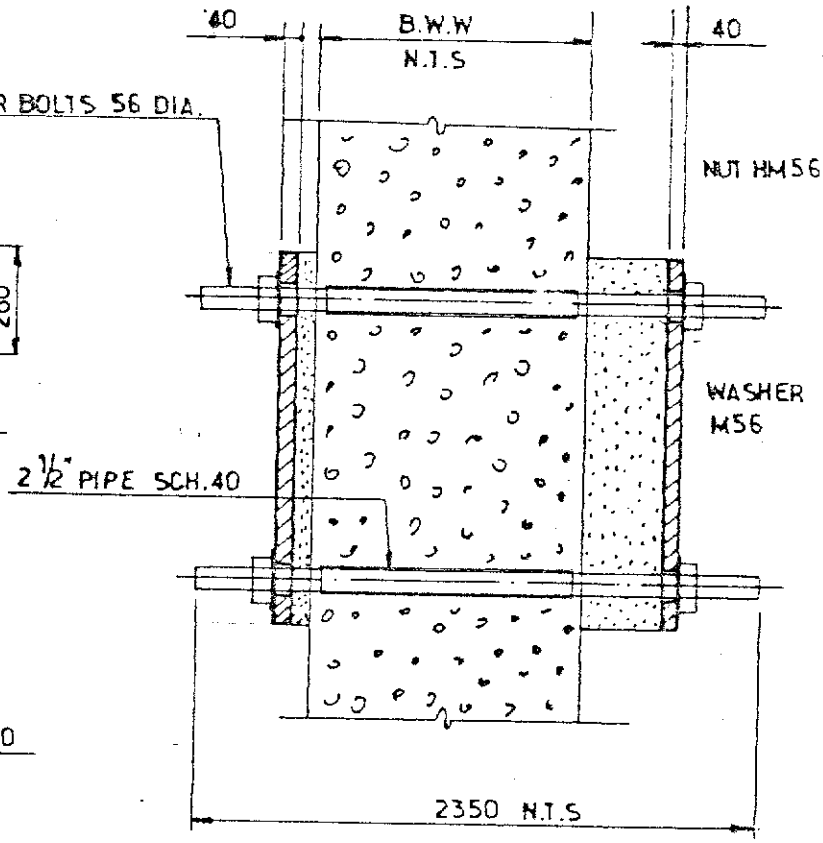

SECTION A-A

NOTES

FOR LOCATION SEE SK. FF 91-36-35-1137, 1143

PRESENCE OF BASE PLATES (6 N°) TO BE CHECKED.

Rev.	Date	DESCRIPTION	by	app.
1	11-83	REDRAWN		

Contractor JVD 1029 30 18

elf aquitaine norge a/s
p.o.box 168
4001 Stavanger

elf

FRIGG FIELD

Job no.	Installation	System
	CDP 1	UNDERWATER
Scale 1:20	BASE PLATE TYPE 22 FOR EAST FIREWATER PUMP CASING	
Dwgr. no. FF 91-36-35-1147	Rev 1	Sheet

JERNBETON-DORIS

- PART II -

INSPECTION INSIDE BREAKWATER WALL FOR ALL CELLS A.B.C.D.E. AND F. FROM TOP OF BREAKWATER WALL DOWN TO SOLID BALLAST AT LEVEL -40 M M.L.W.

Document N° STA B.1049
Rev.1 - February 1984

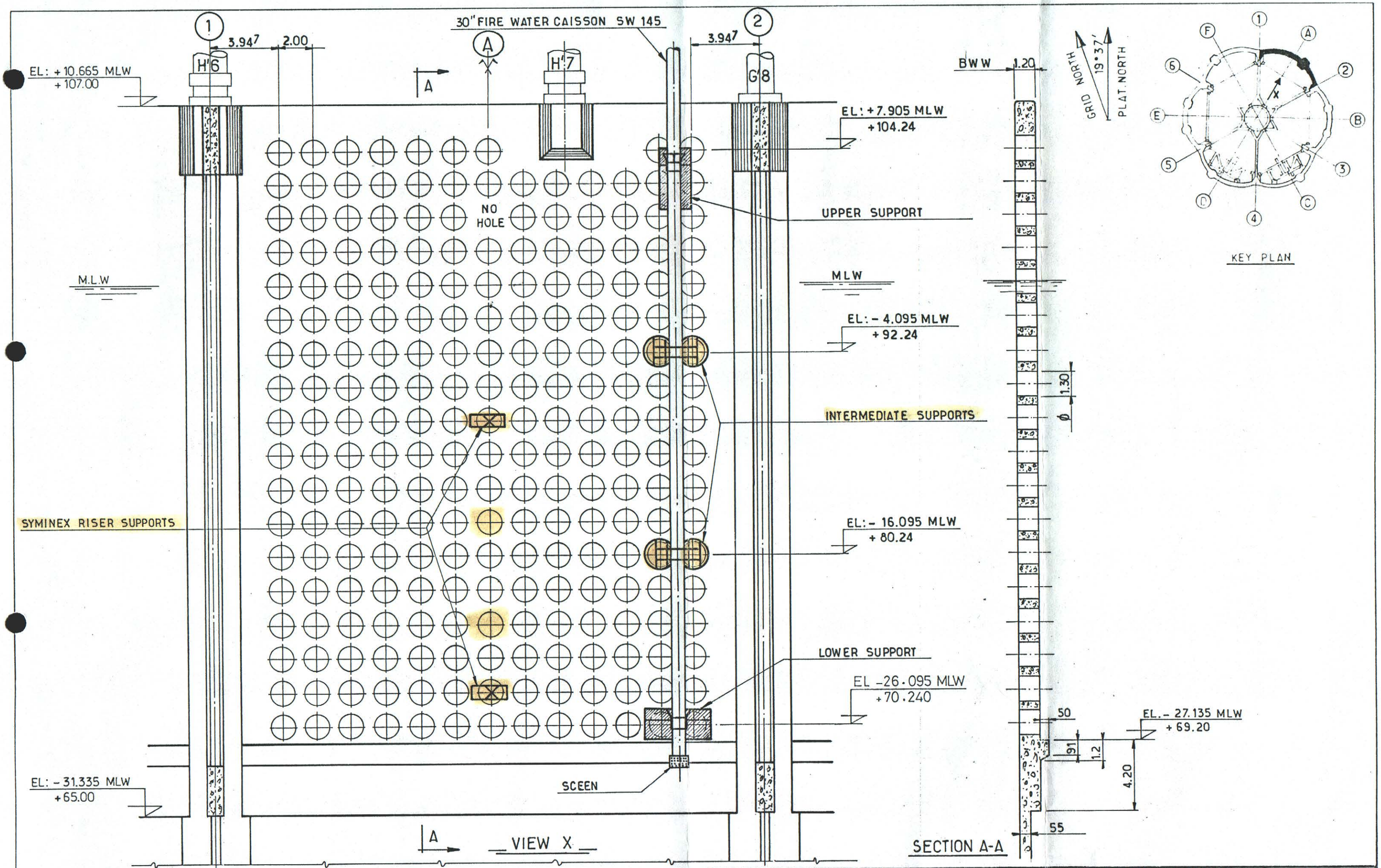

NOTES

FOR UPPER SUPPORT —— SEE SK. FF 91-36-35-1514
FOR INTERMEDIATE SUP. ——"—— "HOLD" NO DRAWING FOUND.
FOR LOWER SUPPORT ——"—— 1515
FOR SCREEN DETAIL ——"—— 1538
FOR SYMINEX RISER SUP. ——"—— 1550 to 1553

Rev.	Date	DESCRIPTION	by	app.
1	10-83	UPDATED	J.L.C	J.L.C

Contractor JVD 1029-30-12

elf aquitaine norge a/s
p.o.box 168
4001 Stavanger

elf
FRIGG FIELD

Job no.	Installation	System
	CDP 1	UNDERWATER
Scale 1:200	BREAK WATER WALL — CELL A — DEVELOPED INTERNAL VIEW	
Dwgr. no FF 91-36-35-1141	Rev. 1	Sheet /

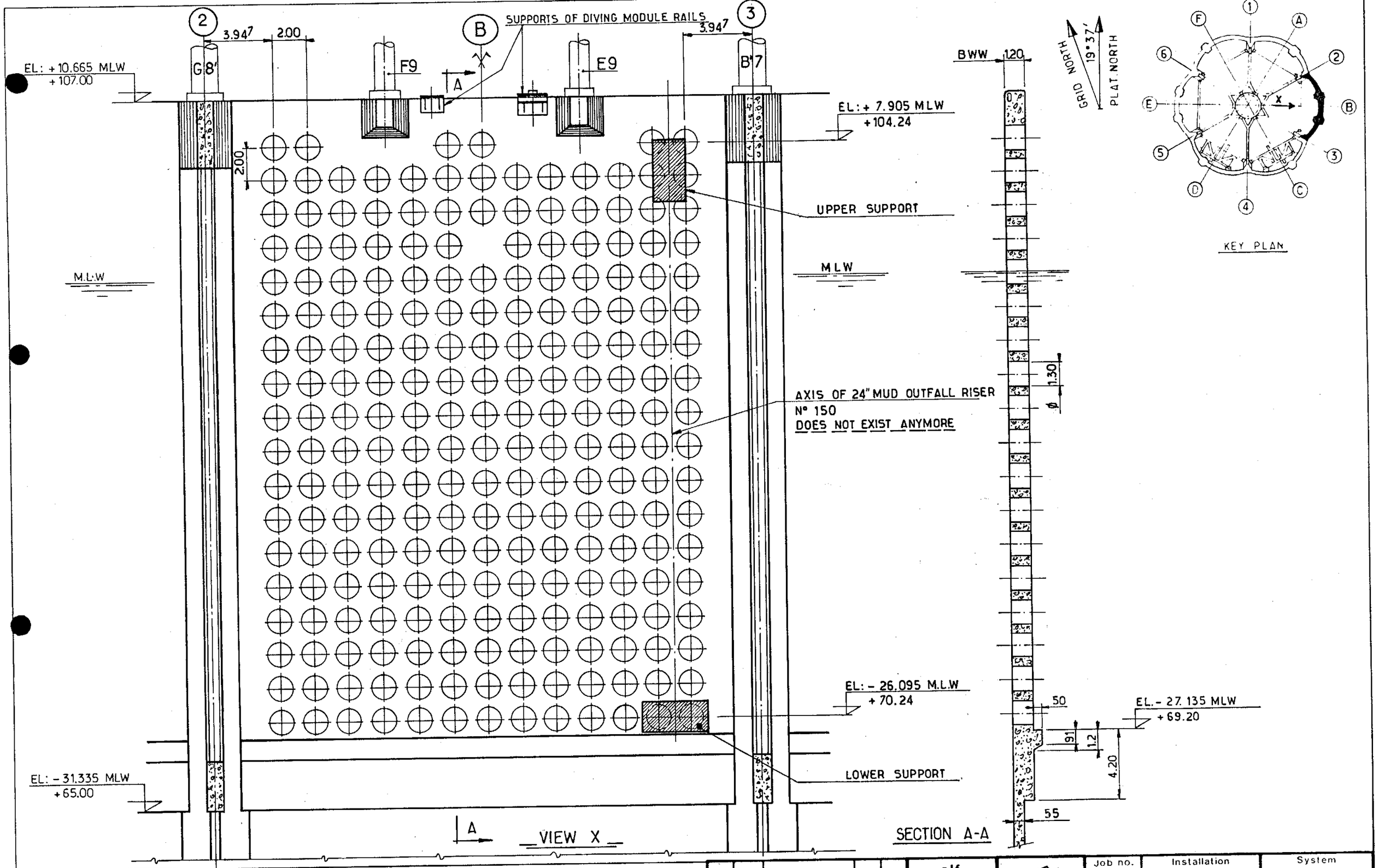

NOTES

FOR UPPER SUPPORT — SEE SK. FF 91-36-35-1524

FOR LOWER SUPPORT — " — 1525

Rev.	Date	DESCRIPTION	by	app.
1	10-83	UPDATED	J.L.C	J.L.C

Contractor JVD 1029 - 30 - 13

elf aquitaine norge a/s
p.o.box 168
4001 Stavanger

elf
FRIGG FIELD

Job no.	Installation	System
	CDP 1	UNDERWATER
Scale 1: 200	BREAK WATER WALL — CELL B — DEVELOPED INTERNAL VIEW	
Dwgr. no FF 91-36-35-1142	Rev. 1	Sheet /

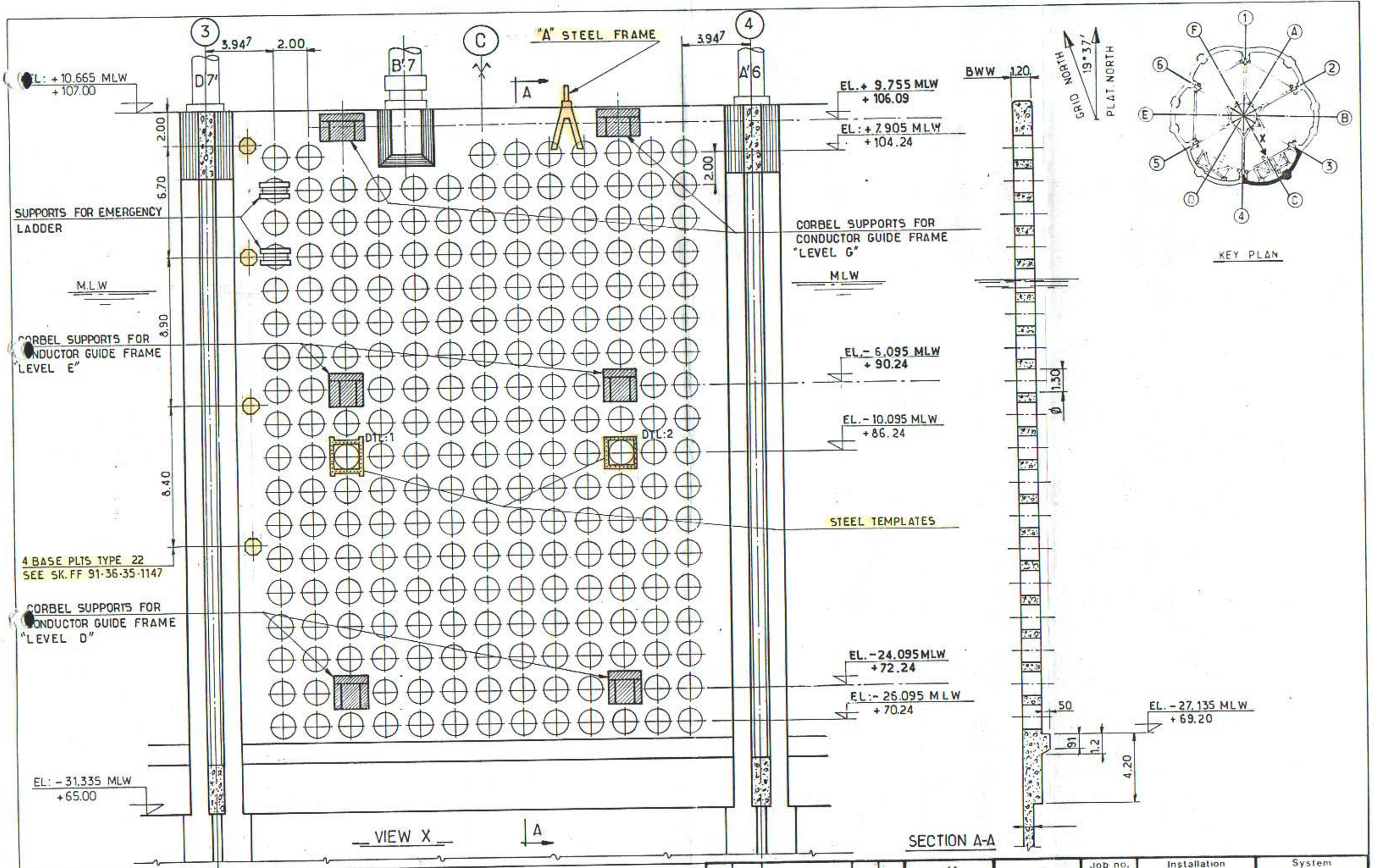

NOTES

FOR CORBEL SUPPORT LEVEL G — SEE SK. FF 91-36-35-1162 to 1171
" " LEVEL E " " 1182 to 1192
" " LEVEL D " " 1204 to 1214
FOR LADDER SUPPORTS " " 1568
FOR STEEL TEMPLATES DTLS.1&2 " " 1156.1157

Rev.	Date	DESCRIPTION	by	app
1	10-83	UPDATED	J.L.C	J.L.C

Contractor JVD 1029-30-14

elf aquitaine norge a/s
p.o.box 168
4001 Stavanger

elf
FRIGG FIELD

Job no.	Installation	System
	CDP 1	UNDERWATER
Scale 1:200	BREAK WATER WALL — CELL C — DEVELOPED INTERNAL VIEW	
Dwgr. no FF 91-36-35-1143	Rev. 1	Sheet /

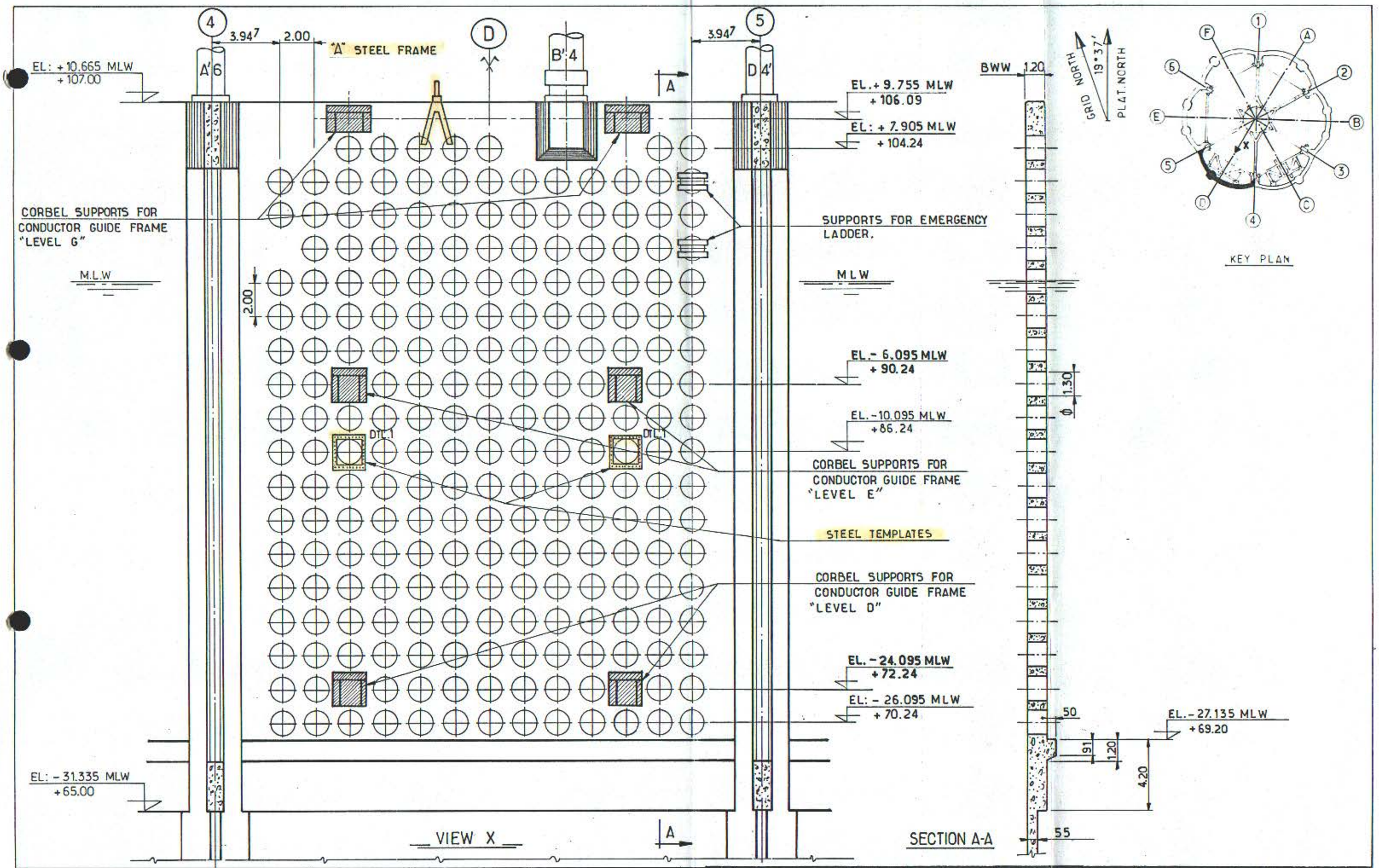

NOTES

FOR CORBEL SUPPORTS LEVEL G — SEE SK. FF 91-36-35-1172 to 1181
— " — LEVEL E — " — 1193 to 1203
— " — LEVEL D — " — 1215 to 1225
FOR LADDER SUPPORTS — " — 1568
FOR STEEL TEMPLATES DTL.1 — " — 1156

Rev.	Date	DESCRIPTION	by	app
1	10-93	UPDATED	J-LC	J-LC

Contractor JVD 1029 30 15

elf aquitaine norge a/s
p.o.box 168
4001 Stavanger

elf
FRIGG FIELD

Job no.	Installation	System
	CDP 1	UNDERWATER

Scale 1:200

BREAK WATER WALL — CELL D —
DEVELOPED INTERNAL VIEW

Dwgr. no FF 91-36-35-1144 | Rev. 1 | Sheet /

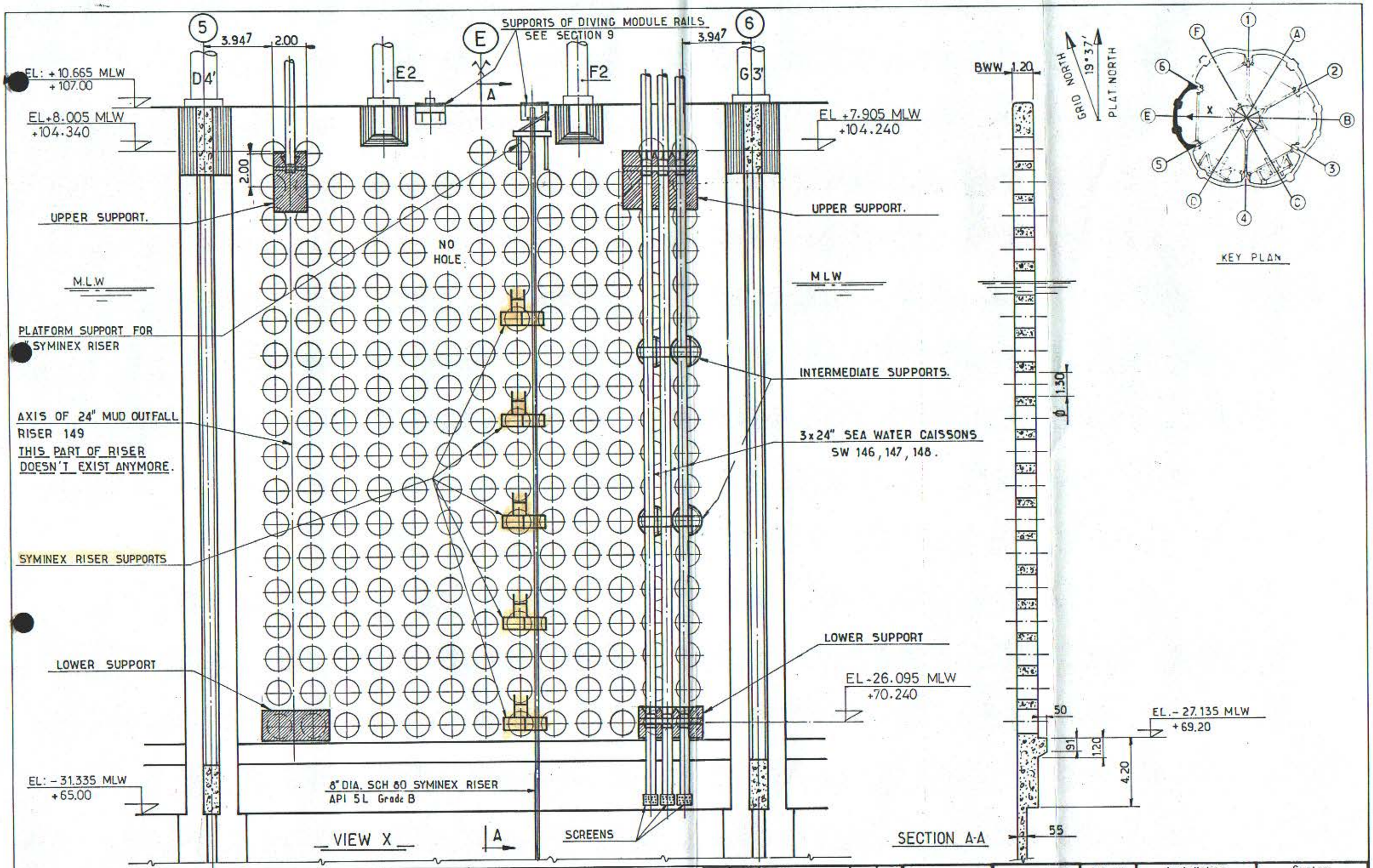

NOTES

FOR RISER SUPPORTS 149 —— SEE SK. FF 91-36-35-1526.1527
FOR RISER SUPPORTS 146 147 148 ——— " ——— 1519 to 1523
FOR SYMINEX PLATFORM ——— " ——— 1547
FOR SYMINEX SUPPORTS ——— " ——— 1548.1551.1552.1553
FOR SCREEN DETAIL ——— " ——— 1539

Rev.	Date	DESCRIPTION	by	app.
1	10-83	UPDATED	T.L.C	T.L.C

Contractor JVD 1029 30 16

elf aquitaine norge a/s
p.o.box 168
4001 Stavanger

elf
FRIGG FIELD

Job no.	Installation	System
	CDP 1	UNDERWATER
Scale 1: 200	BREAK WATER WALL — CELL E — DEVELOPED INTERNAL VIEW	
Dwgr. no FF 91-36-35-1145	Rev. 1	Sheet /

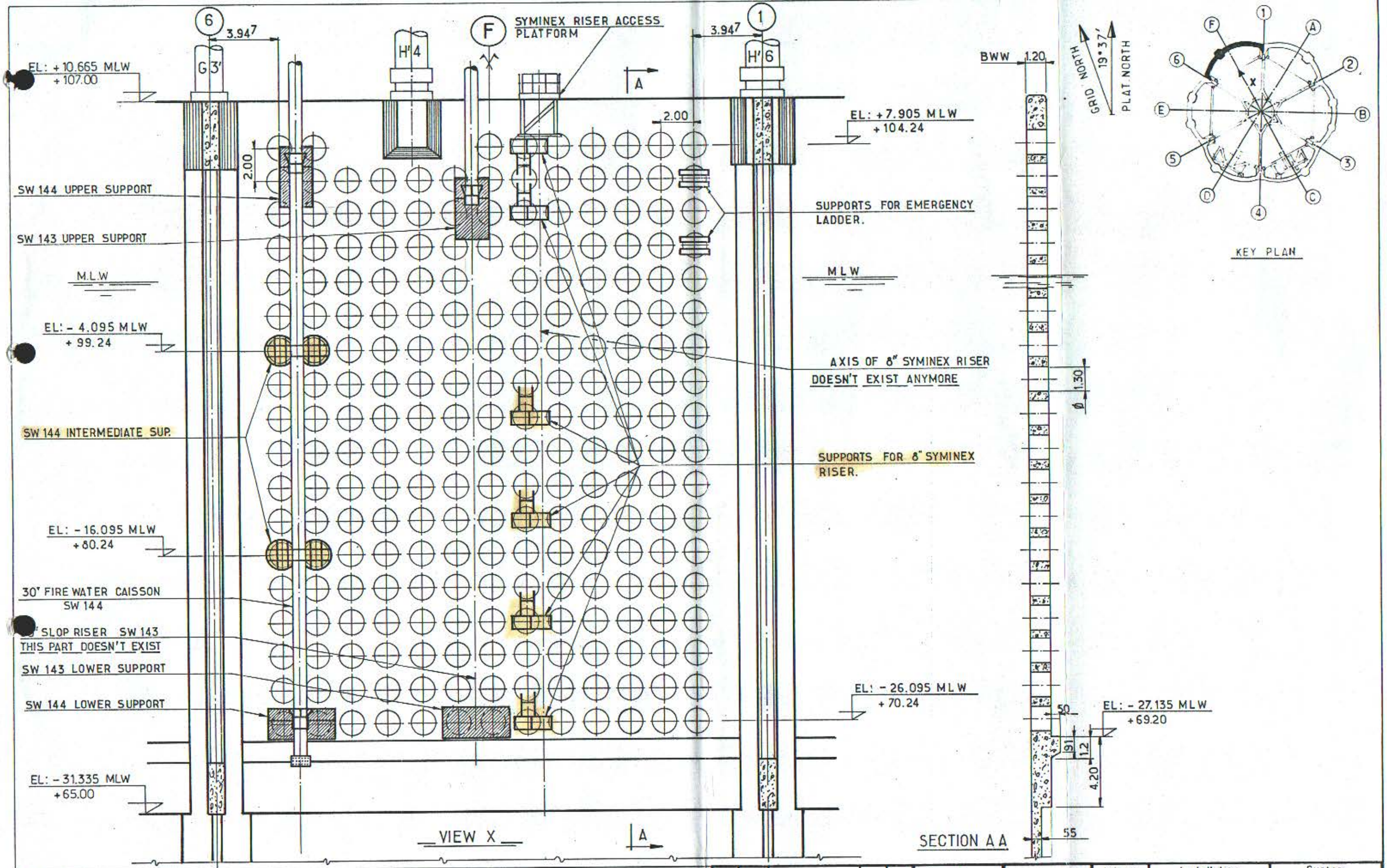

NOTES

FOR SUPPORTS OF RISERS SW 143 and 144 — SEE SK. FF 91-36-35-1507 to 1510
FOR INTERMEDIATE SUPPORTS SW 144 — " — "HOLD" NO DRG. FOUND
FOR SYMINEX SUPPORTS — " — 1549 to 1553
FOR SYMINEX PLATFORM — " — 1546
FOR EMERGENCY LADDER SUPPORTS — " — 1564 to 1568
FOR SCREEN DETAIL — " — 1537

Rev.	Date	DESCRIPTION	by	app.
1	10-83	UPDATED	J.L.C	J.L.C

Contractor JVD 1029 30 17

elf aquitaine norge a/s
p.o.box 168
4001 Stavanger

elf
FRIGG FIELD

Job no.	Installation	System
	CDP 1	UNDERWATER
Scale 1:200	BREAK WATER WALL — CELL F — DEVELOPED INTERNAL VIEW	
Dwgr. no FF 91-36-35-1146	Rev. 1	Sheet /

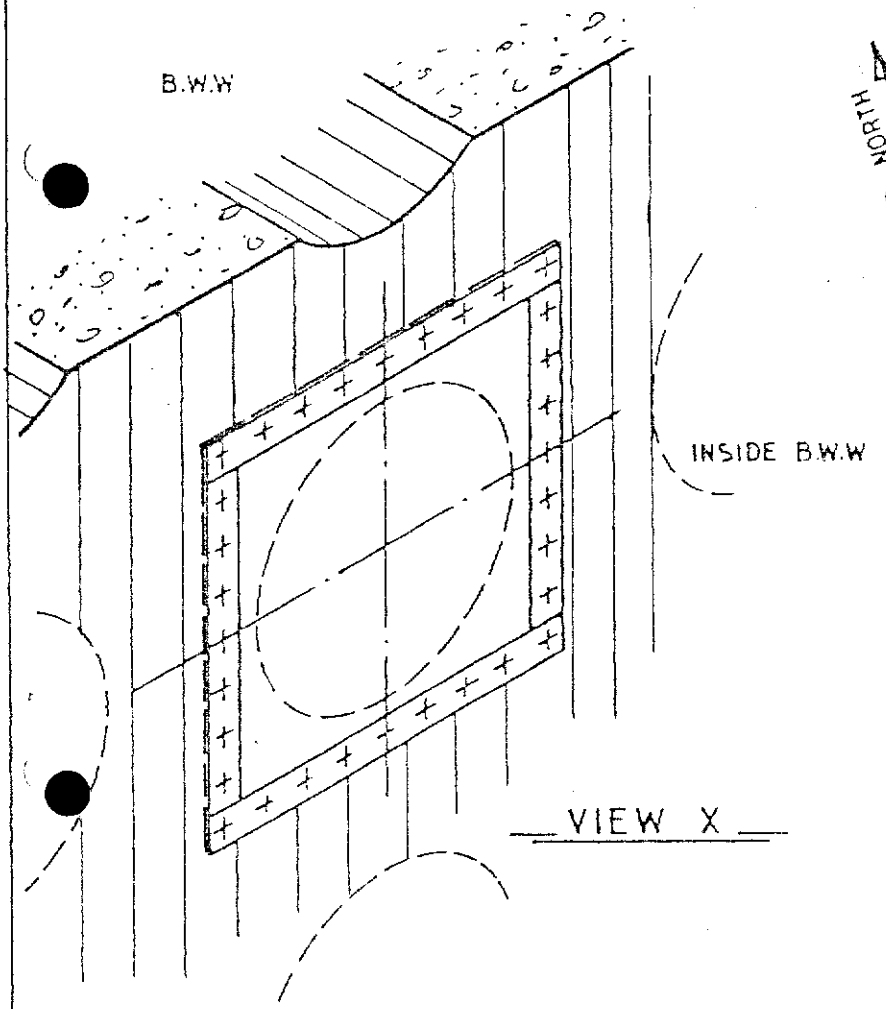

VIEW X

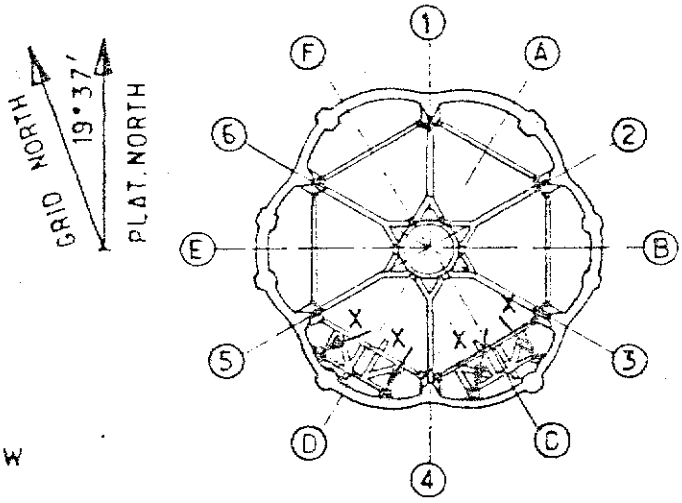

KEY PLAN

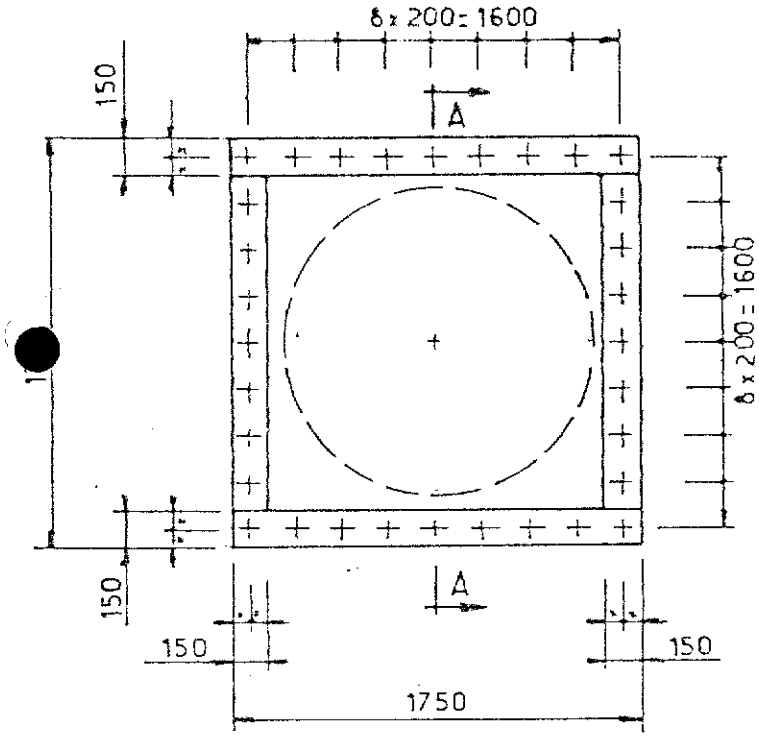

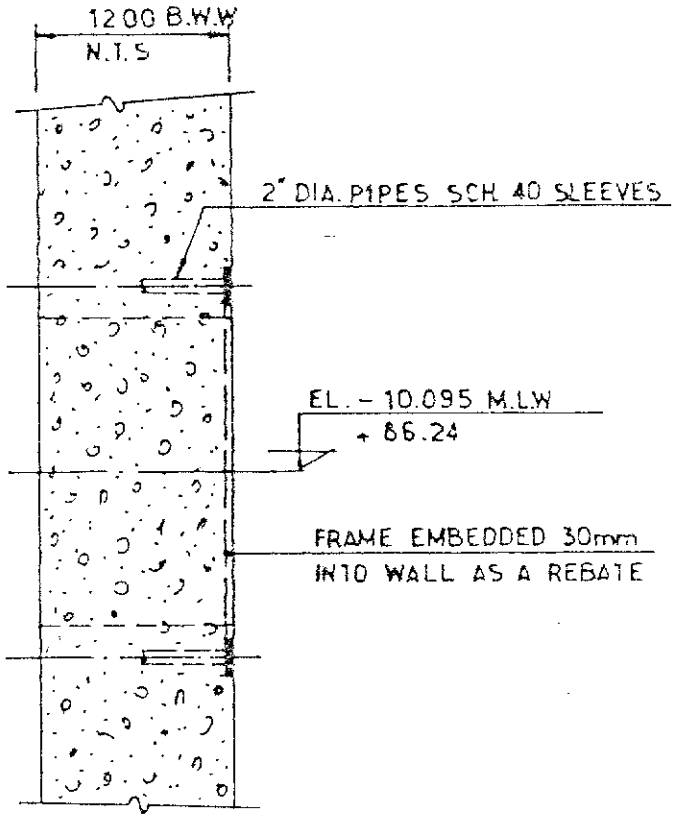

SECTION A-A

NOTES

FOR LOCATION SEE SK FF 91-36-35-1143, 1144

DIMENSIONS TO BE CHECKED

Rev.	Date	DESCRIPTION	by	app.
1	12-83	REDRAWN		

Contractor JVD 1029 30 27

elf aquitaine norge a/s
p.o.box 168
4001 Stavanger

elf
FRIGG FIELD

Job no.	Installation	System
	CDP 1	UNDERWATER
Scale 1:33 1/3	STEEL TEMPLATE DETAIL 1	
Dwgr. no. FF 91-36-35-1156	Rev. 1	Sheet

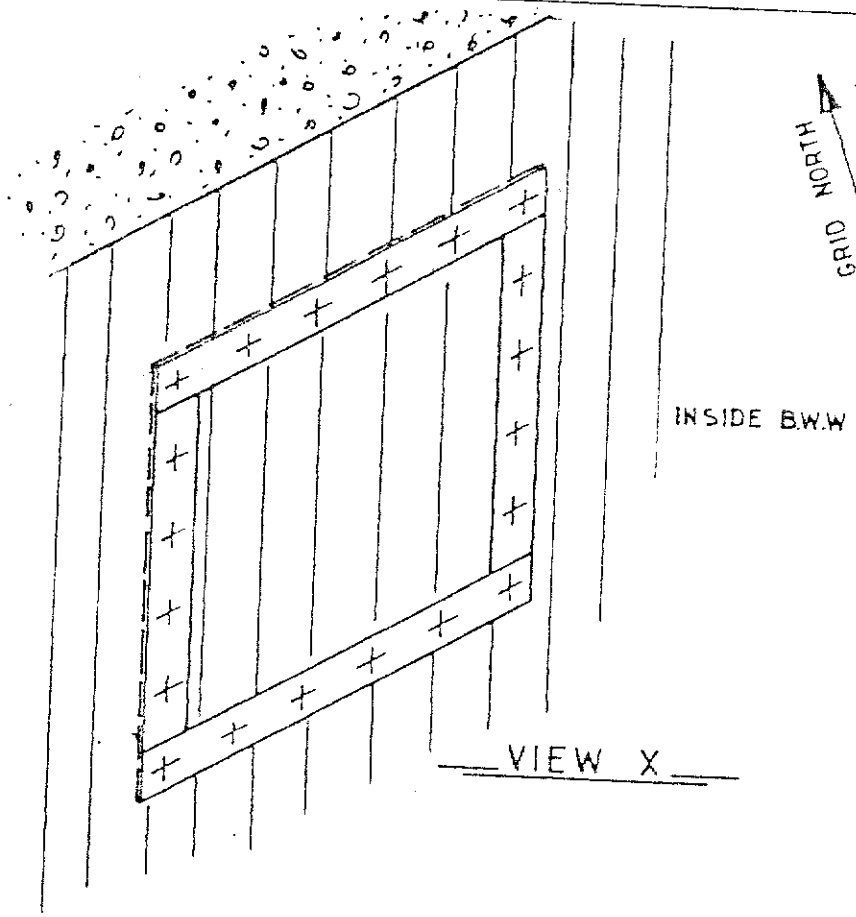

VIEW X

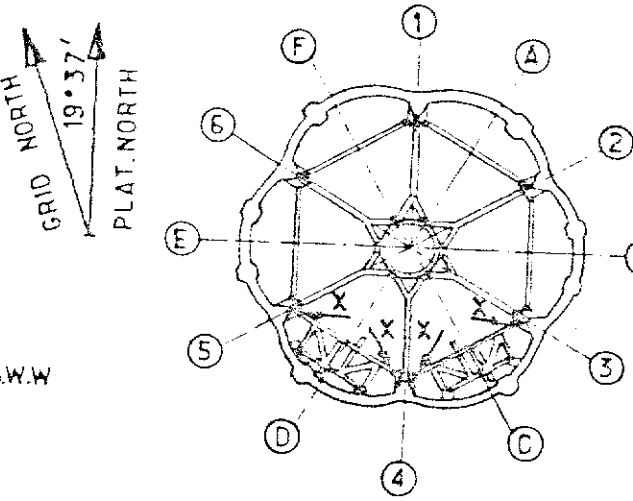

KEY PLAN

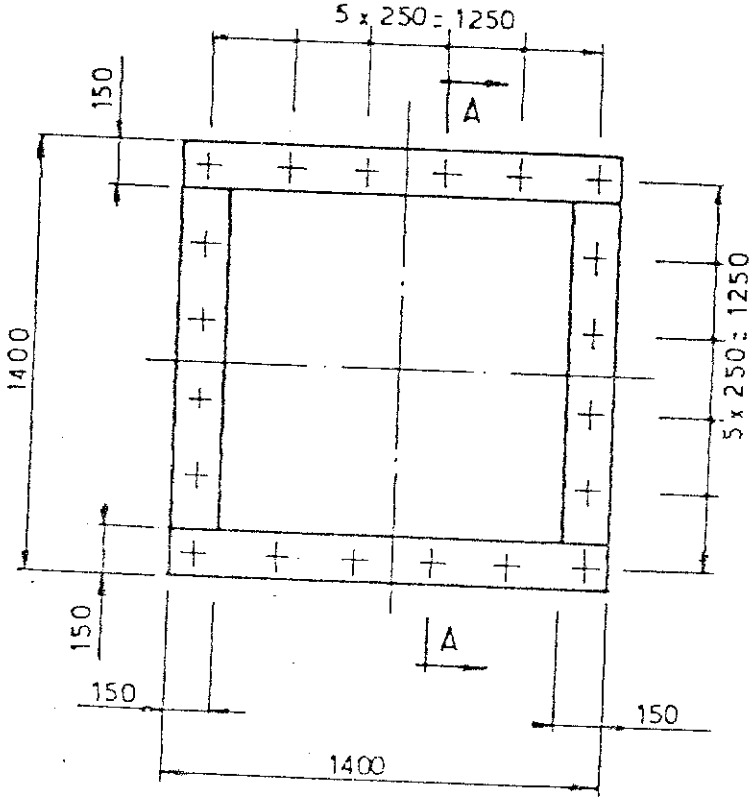

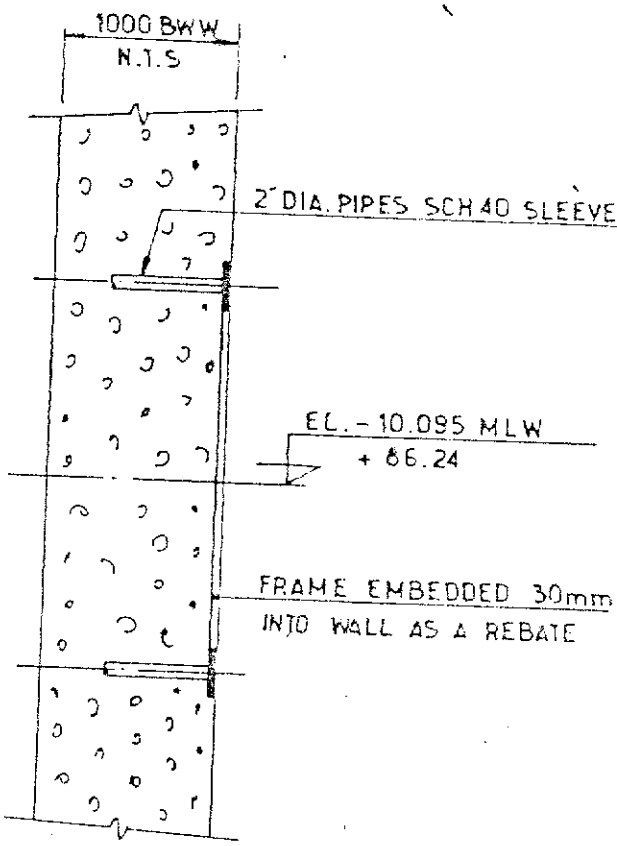

SECTION A A

NOTES

FOR LOCATION SEE SK. FF 91-36-35 - 1143, 1144

DIMENSIONS TO BE CHECKED

Rev.	Date	DESCRIPTION	by	app.
1	12 83	REDRAWN	JHC	HLC

Contractor JVD 1029 30 28

elf aquitaine norge a/s
p.o.box 168
4001 Stavanger

elf
FRIGG FIELD

Job no.	Installation	System
	CDP 1	UNDERWATER
Scale 1:25	STEEL TEMPLATE DETAIL 2	
Dwgr. no.		Rev. / Sheet

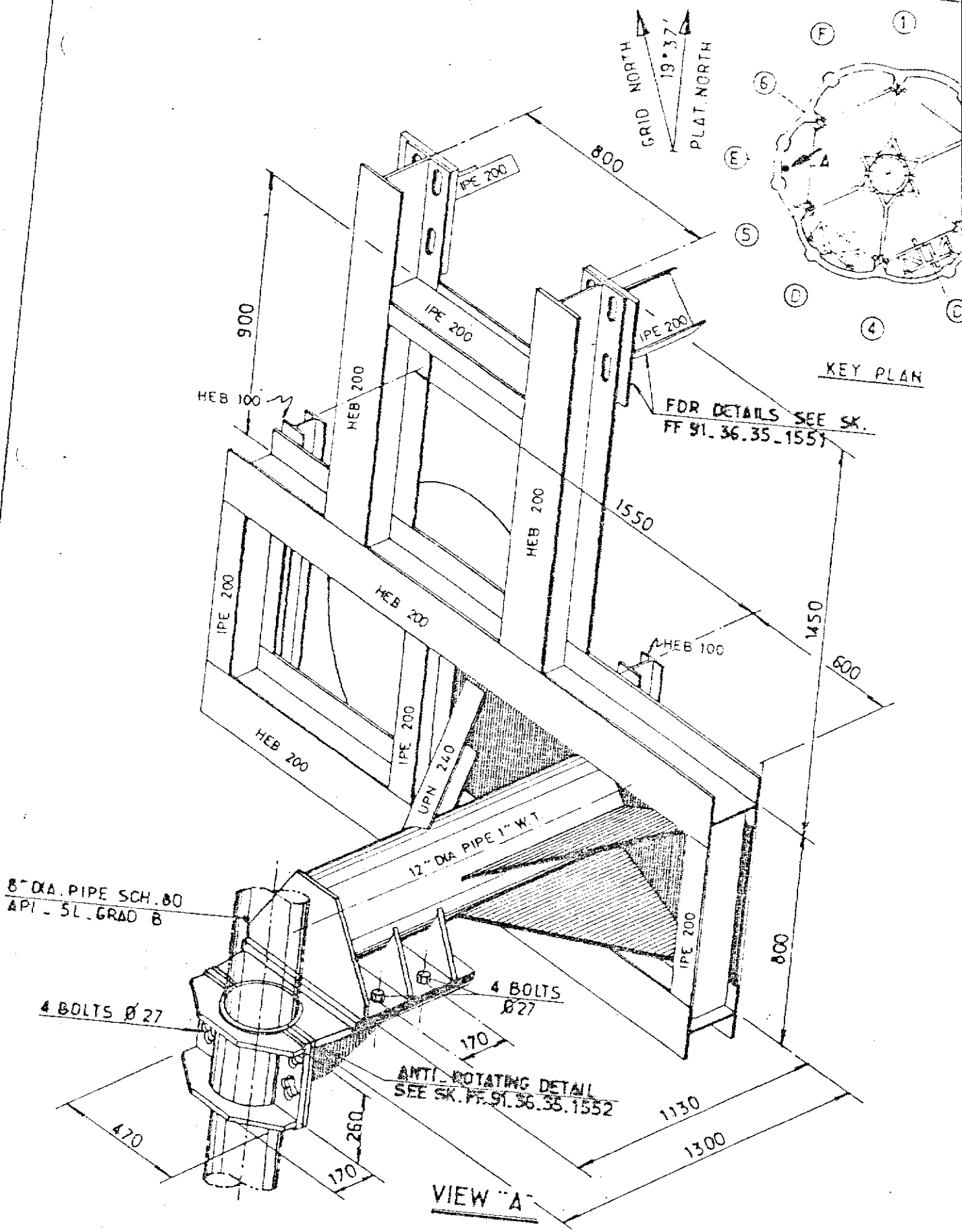

Rev.	Date	DESCRIPTION	by	app.
1	10/83	UPDATED	mirs	

Contractor JVD_1029.60.04

elf aquitaine norge a/s
p.o.box 168
4001 Stavanger

elf

FRIGG FIELD

Job no.	Installation	System
	CDP 1	UNDERWATER
Scale	TYPICAL SUPPORT CELL "E" - TYPE "B"	
Dwgr. no		

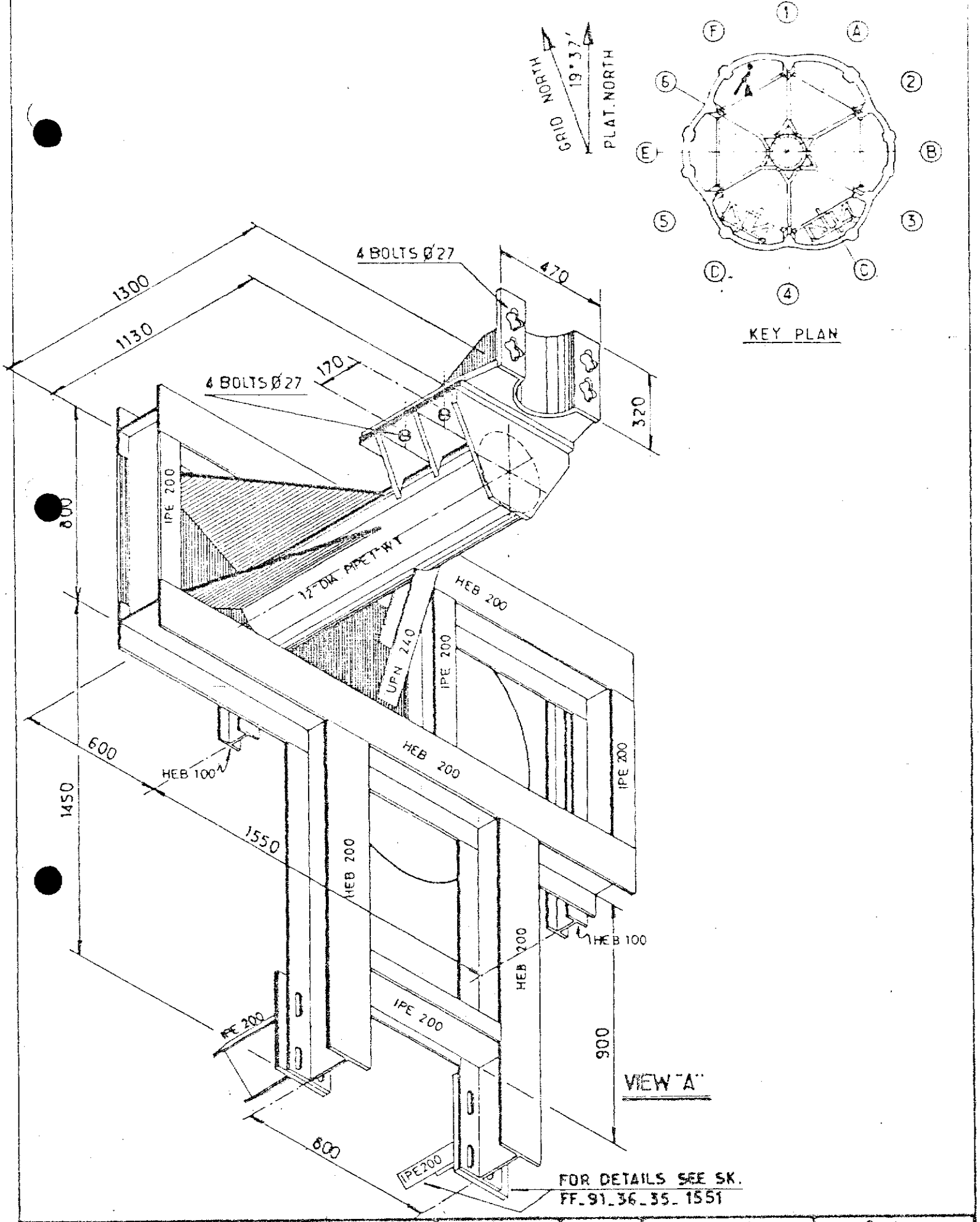

1	12/83	UPDATED	mirs		elf aquitaine norge a/s p.o.box 168 4001 Stavanger	elf	Job no.	Installation CDP 1	System UNDERWATER
Rev.	Date	DESCRIPTION	by	app.			Scale	TYPICAL SUPPORT. CELL "F" TYPE "A"	
Contractor JVD.1029.60_05						FRIGG FIELD	Dwgr. no. FF 91_36_35_1549	Rev. 1	Sheet /

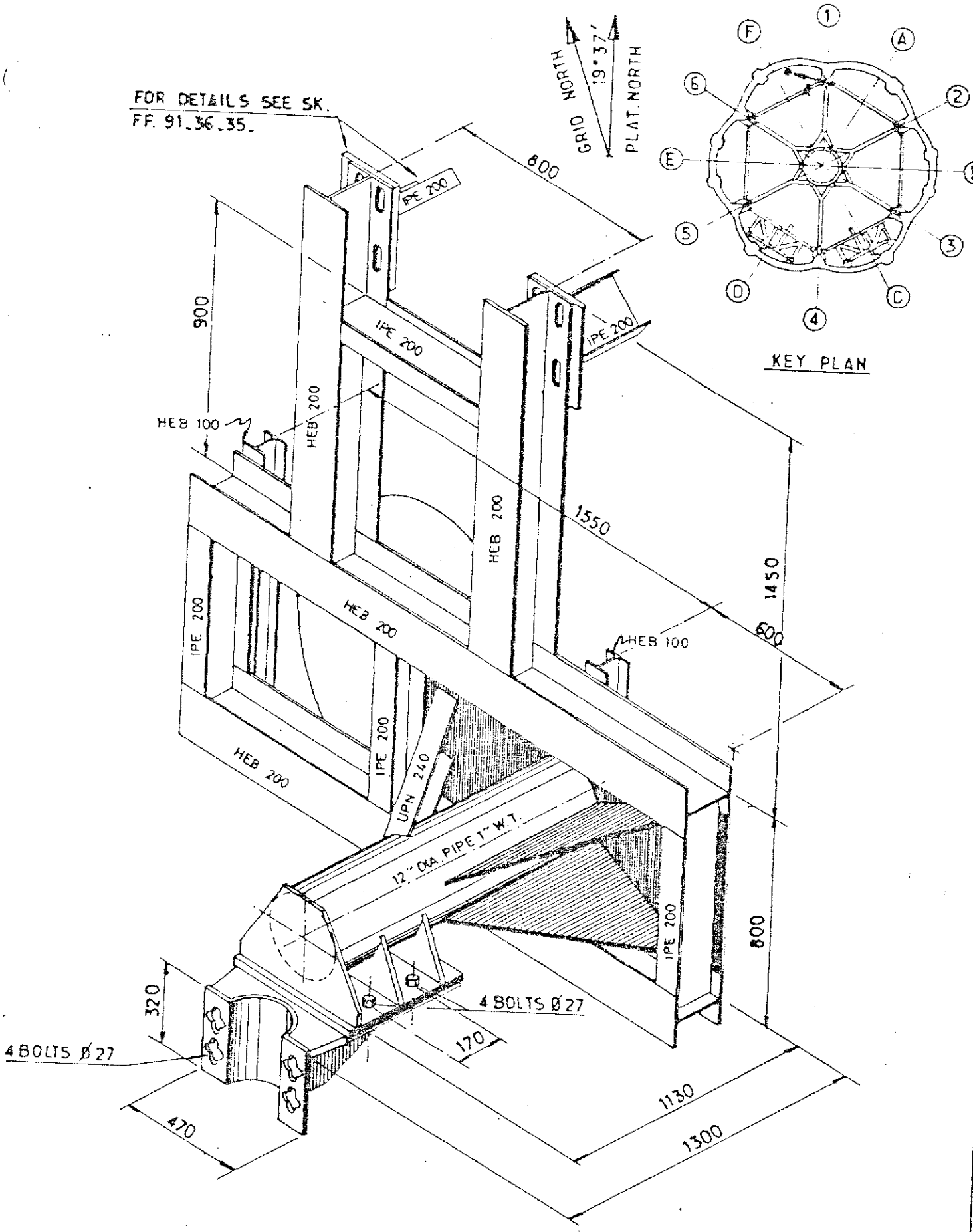

Rev.	Date	DESCRIPTION	by	app.
1	10/83	UPDATED	mira	

Contractor JVD_1029.60.06

elf aquitaine norge a/s
p.o.box 168
4001 Stavanger

elf

FRIGG FIELD

Job no.	Installation	System
	CDP 1	UNDERWATER
Scale	TYPICAL SUPPORT CELL "F"_TYPE "B"	
Dwgr. no. FF 91_36_35_1550	Rev. 1	Sheet

JERNBETON-DORIS

- PART III -

INSPECTION INSIDE ALL CELLS A.B.C.D.E. AND F, FROM THE TOP OF BREAKWATER WALL DOWN TO SOLID BALLAST AT -40 M M.L.W.

Document N° STA B.1049
Rev.1 - February 1984

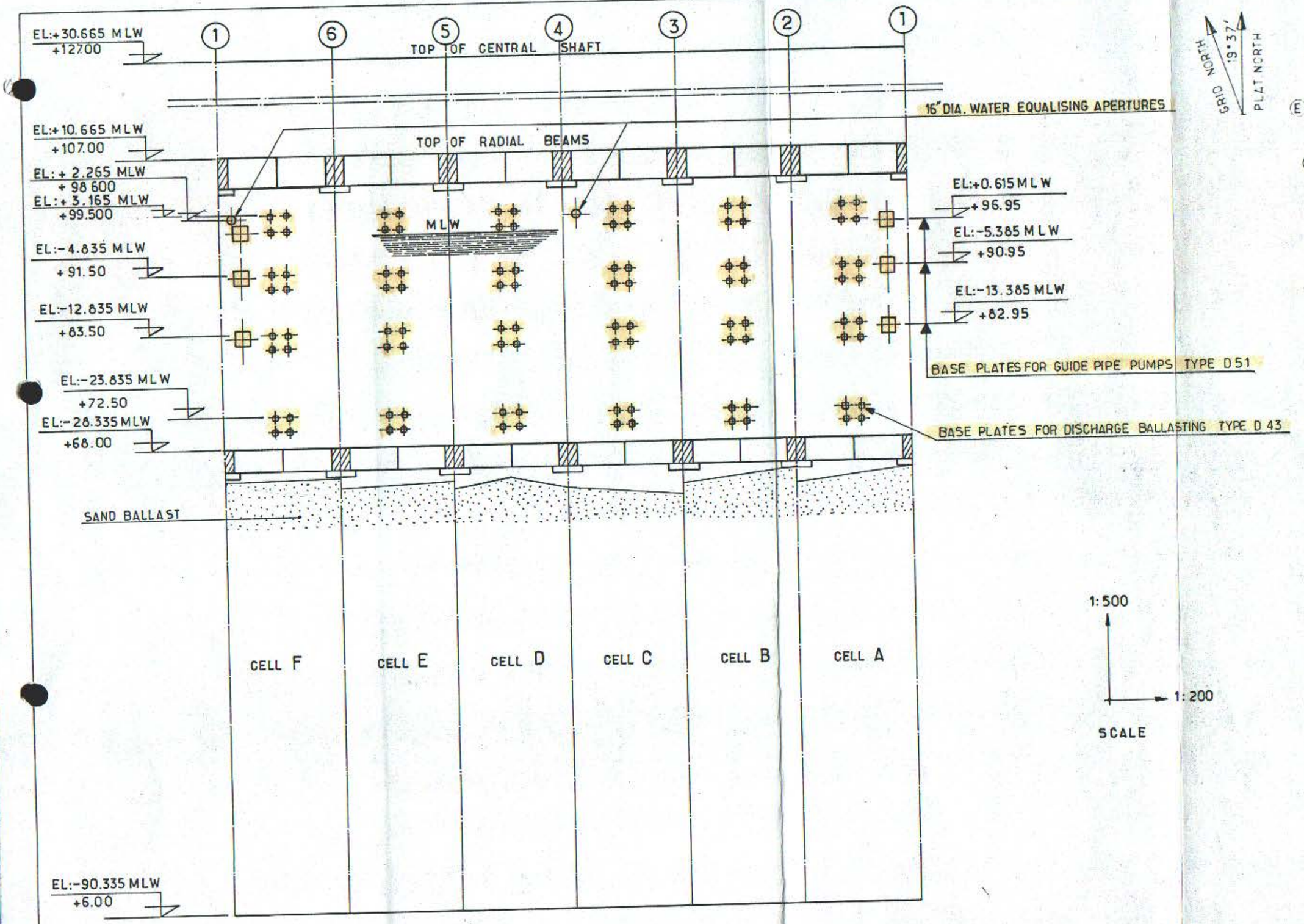

NOTES:

BASE PLATE TYPE D 51 ___ SEE SK._FF-91-36-35-1132
BASE PLATE TYPE D 43 ___ SEE SK._FF-91-36-35-1131
WATER EQUALISING APERTURE ___ SEE SK._FF-91-36-35-1134

Rev.	Date	DESCRIPTION	by	app
1	10-83	UPDATED	F/c	F/c

Contractor JVD 1029 30 01

elf aquitaine norge a/s
p.o.box 168
4001 Stavanger

elf
FRIGG FIELD

Job no.	Installation	System
	CDP 1	UNDERWATER
Scale AS NOTED	CENTRAL SHAFT DEVELOPED EXTERIOR VIEW	
Dwgr. no FF 91-36-35-1130	1	1/1

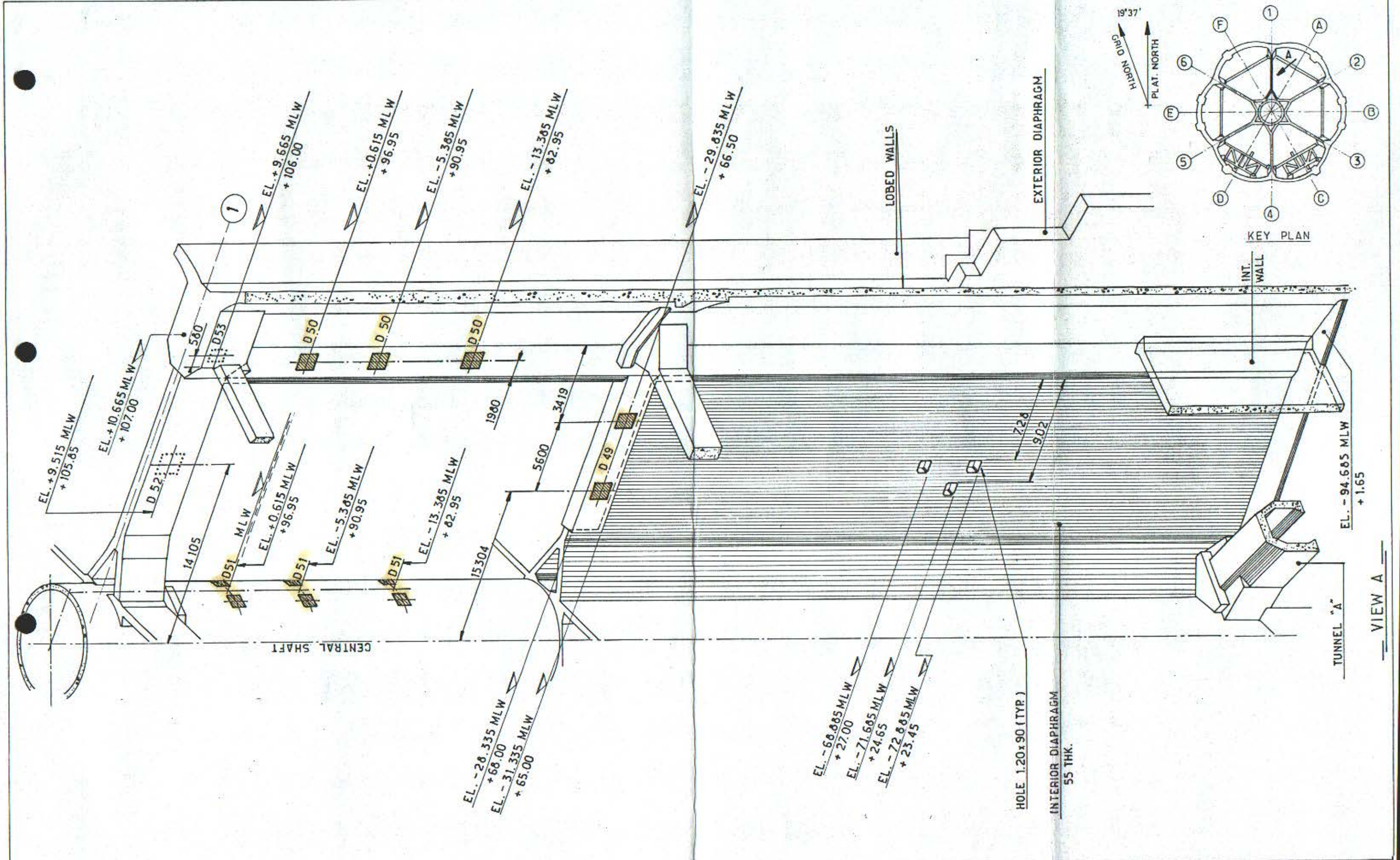

NOTES

FOR DETAIL OF BASE PLATE D 49 SEE SK. FF 91-36-35-1294
" " D 50 " " 1295
" " D 51 " " 1132
" " D 52 " " 1296
" " D 53 " " 1297

Rev.	Date	DESCRIPTION	by	app.
1	11 83	REDRAWN	J.C	H.C

Contractor JVD 1029-20_14

elf aquitaine norge a/s
p.o.box 168
4001 Stavanger

elf
FRIGG FIELD

Job no.	Installation	System
	CDP 1	UNDERWATER
Scale —	INTERIOR DIAPHRAGM I.D 13 VIEW FROM CELL "A"	
Dwgr. no FF 91-36-35-1063	1	Sheet —

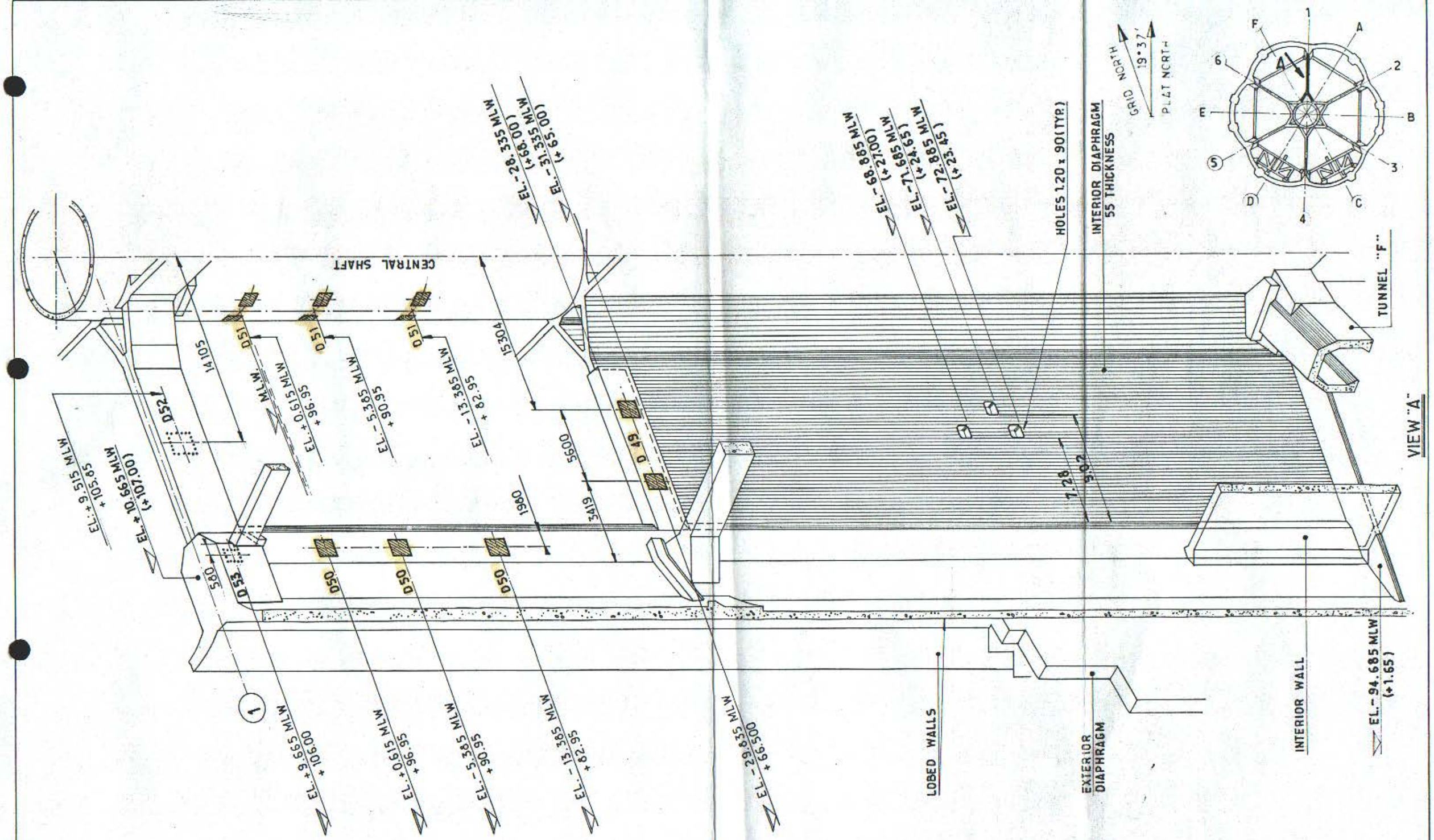

NOTES:

FOR DETAIL OF BASE PLATE D 49 SEE SK. FF 91-36-35 - 1294
" " D 50 " " 1295
" " D 51 " " 1132
" " D 52 " " 1096
" " D 53 " " 1097

Rev	Date	DESCRIPTION	by	app
1	10/83	REDRAWN	mira	

Contractor JVD1029 20_15

elf aquitaine norge a/s
p.o box 168
4001 Stavanger

elf

Job no.	Installation CDP 1	System UNDERWATER
Scale —	INTERIOR DIAPHRAGM I.D 13 VIEW FROM CELL "F"	
Dwgr no. FF 91. 36. 35. 1064		1

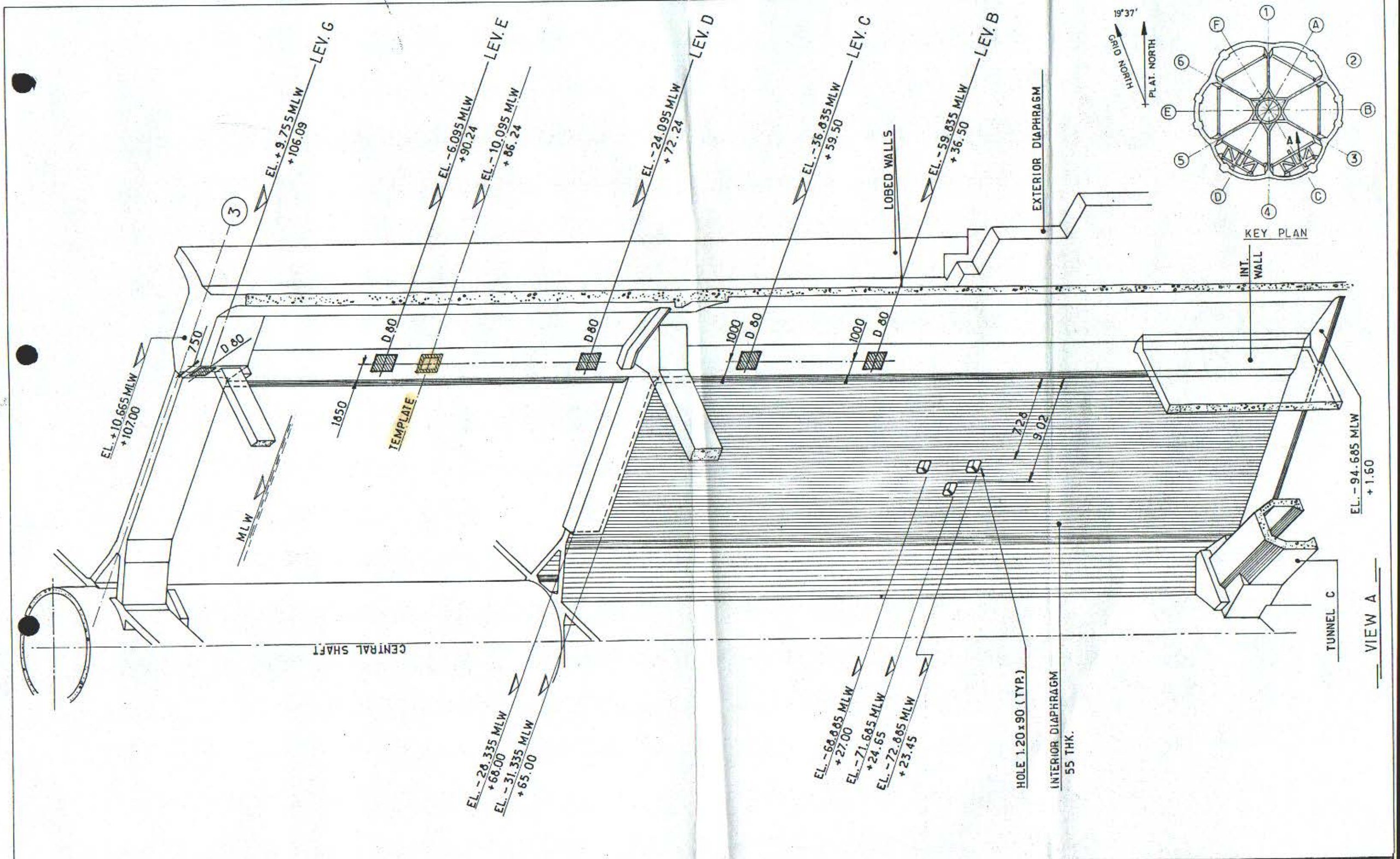

NOTES

FOR DETAIL OF CORBEL PLATES D 80 SEE SECTION 3
FOR DETAIL OF TEMPLATE SEE SK. FF_91_36_35_1157

Rev.	Date	DESCRIPTION	by	app.
1	11-83	REDRAWN	J.C	J.C

Contractor JVD 1029-20-18

elf aquitaine norge a/s
p.o.box 168
4001 Stavanger

elf
FRIGG FIELD

Job no.	Installation	System
	CDP 1	UNDERWATER
Scale —	INTERIOR DIAPHRAGM ID 33 VIEW FROM CELL "C"	
Dwgr. no FF 91-36-35-1067	1	—

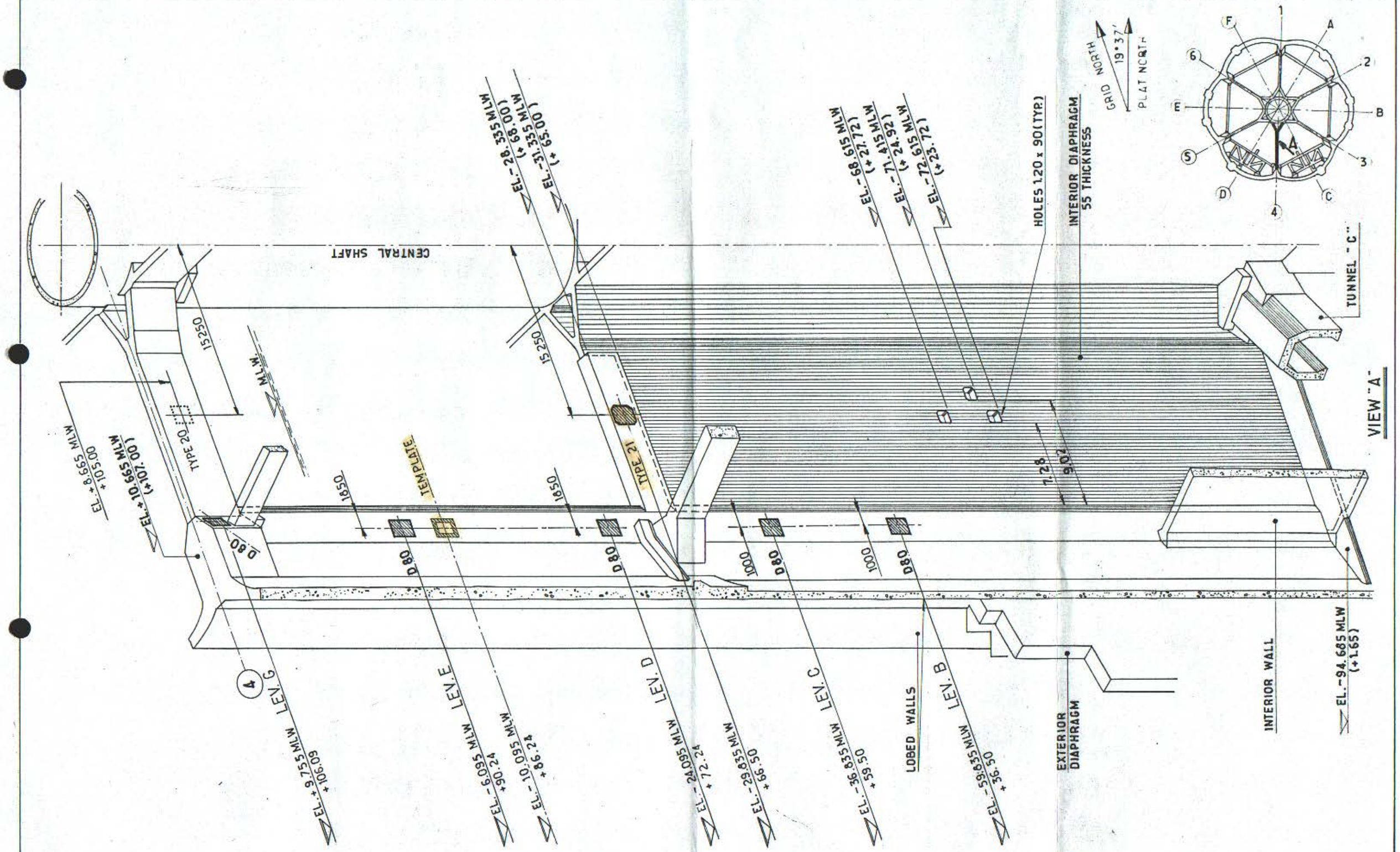

NOTES:

FOR DETAIL OF CORBEL PLATE D 80 SEE SECTION 3
FOR DETAIL OF BASE PLATE TYPE 20 SEE SK. FF 91_36_35_1292
" TYPE 21 " 1293
FOR DETAIL OF TEMPLATE SEE SK. FF. 91_36_35_1157

Rev.	Date	DESCRIPTION	by	app
1	10/83	REDRAWN	mira	I-LC

Contractor JVD 1029.20.19

elf aquitaine norge a/s
p.o.box 168
4001 Stavanger

elf
FRIGG FIELD

Job no.	Installation	System
	CDP 1	UNDERWATER
Scale /	INTERIOR DIAPHRAGM I.D 43 VIEW FROM CELL "C"	
Dwgr. no FF 91_36_35_1068	Rev. 1	

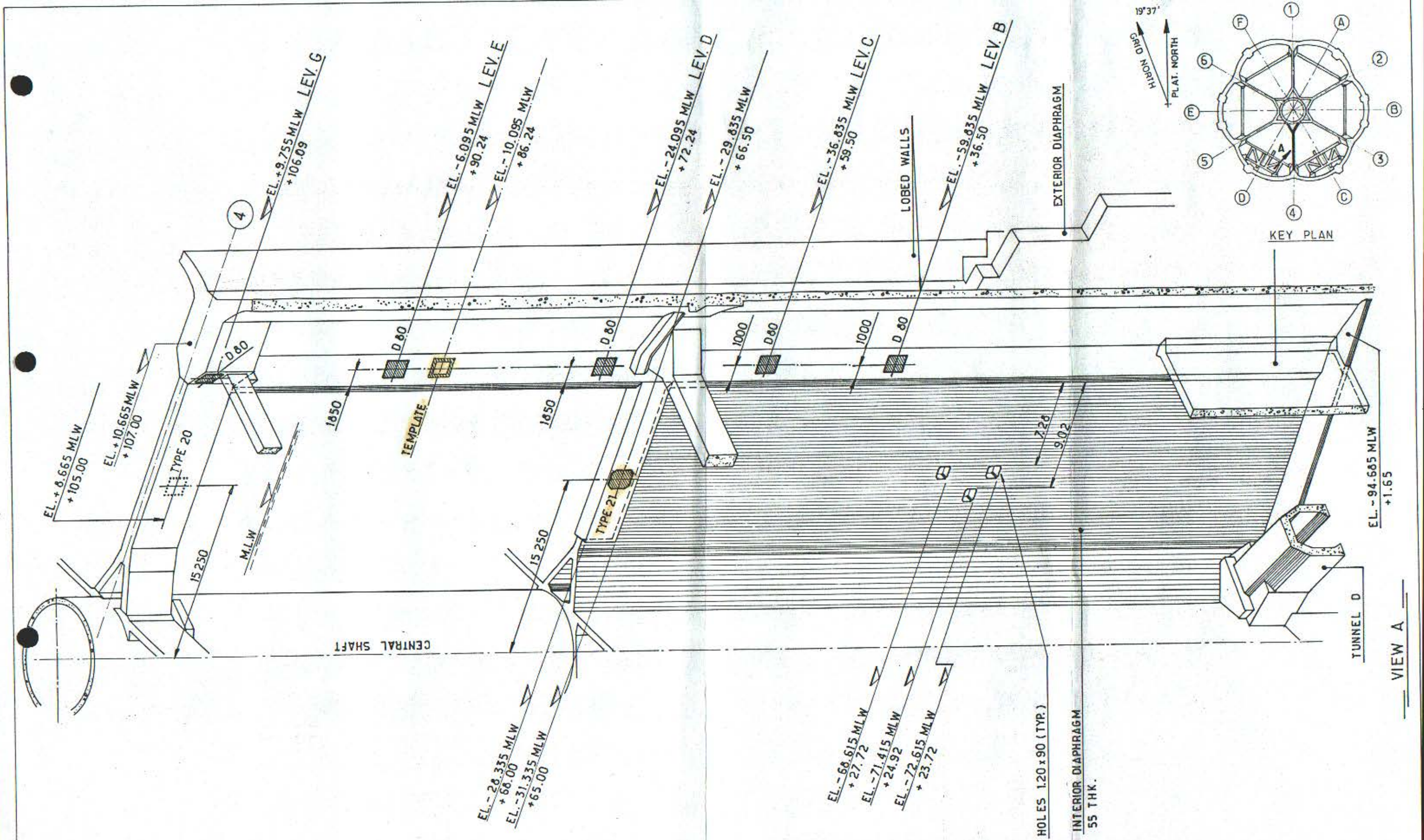

NOTES

FOR DETAIL OF CORBEL PLATE D 80 SEE SECTION 3.
FOR DETAIL OF BASE PLATE TYPE 20 SEE SK. FF. 91_36_35_1292
" " TYPE 21 " " 1293
FOR DETAIL OF TEMPLATE SEE SK. FF. 91_36_35_1157

Rev.	Date	DESCRIPTION	by	app.
1	11.83	REDRAWN	J.C	J.C

Contractor JVD 1029-20_20

elf aquitaine norge a/s
p.o.box 168
4001 Stavanger

elf
FRIGG FIELD

Job no.	Installation	System
	CDP 1	UNDERWATER
Scale —	INTERIOR DIAPHRAGM I.D 43 VIEW FROM CELL "D"	
Dwgr. no. FF 91-36-35-1069	Rev. 1	Sheet —

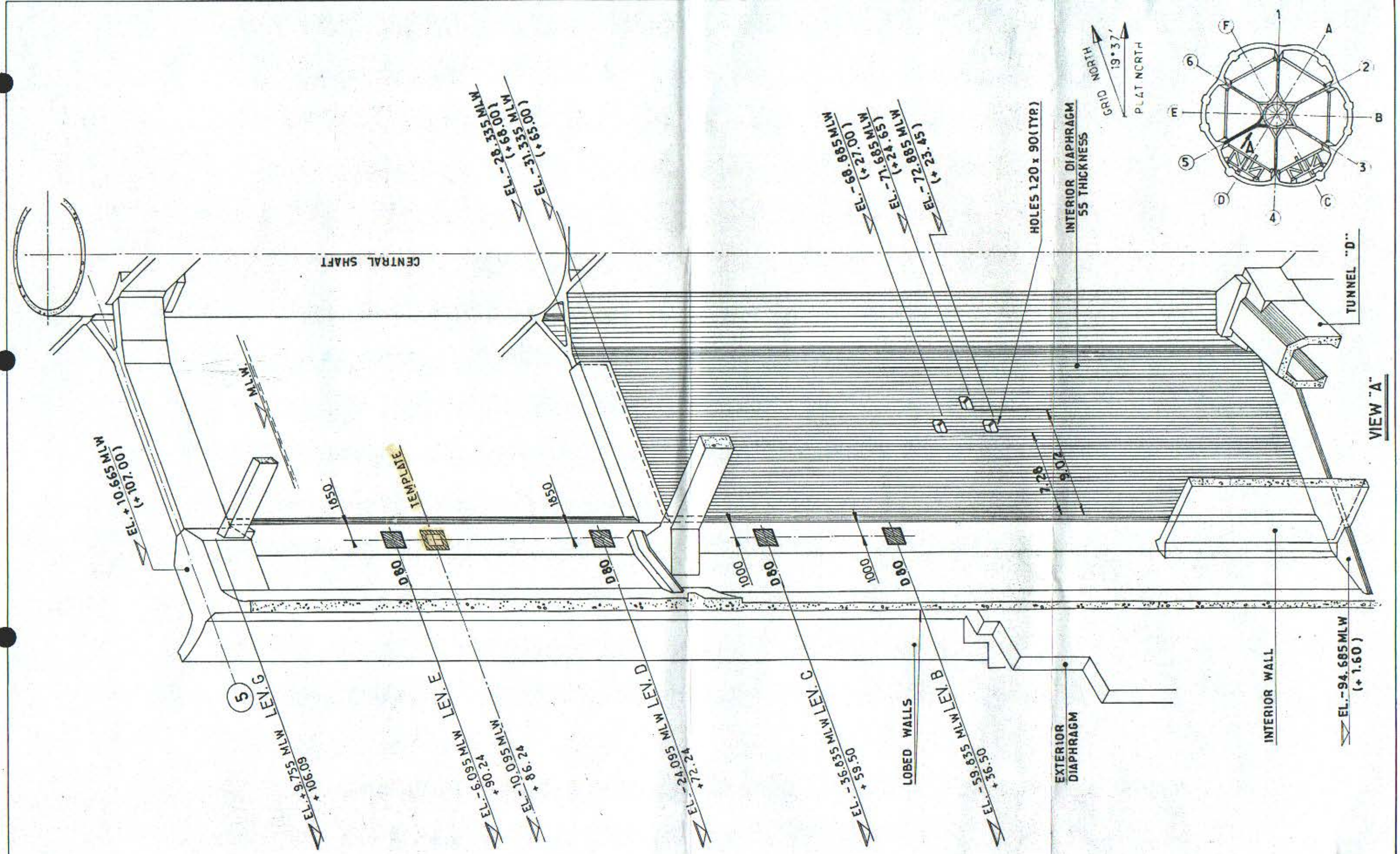

NOTES :

FOR DETAIL OF CORBEL PLATES D 80 SEE SECTION 3.
FOR DETAIL OF TEMPLATE SEE SK. FF. 91_36_35_1157

Rev.	Date	DESCRIPTION	by	app.
1	10/83	REDRAWN	mira	J.C

Contractor JVD1029-20_21

elf aquitaine norge a/s
p.o.box 168
4001 Stavanger

elf
FRIGG FIELD

Job no.	Installation	System
	CDP 1	UNDERWATER
Scale —	INTERIOR DIAPHRAGM I.D 53 VIEW FROM CELL "D"	
Dwgr. no FF 91_36_35_1070	Rev. 1	Sheet —

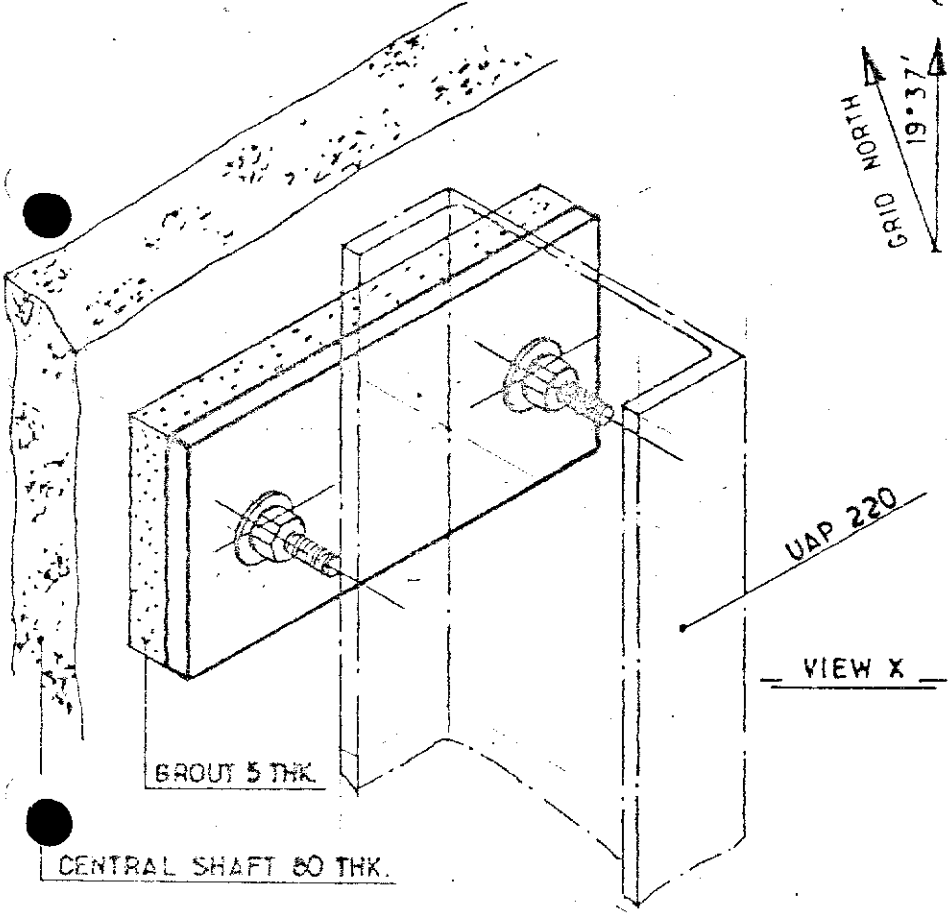

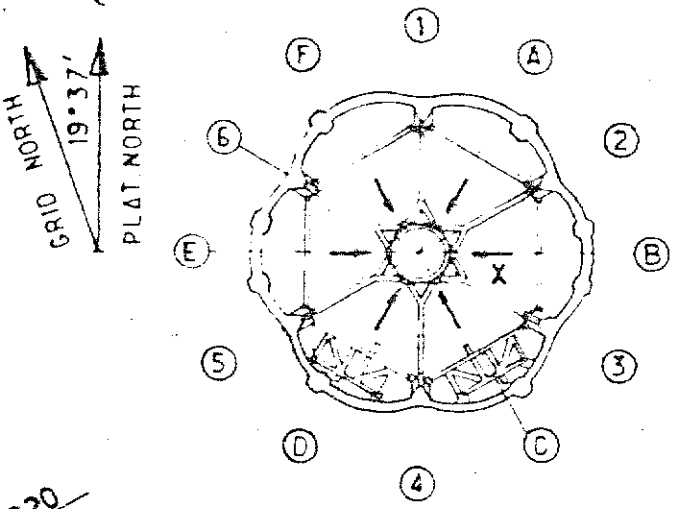

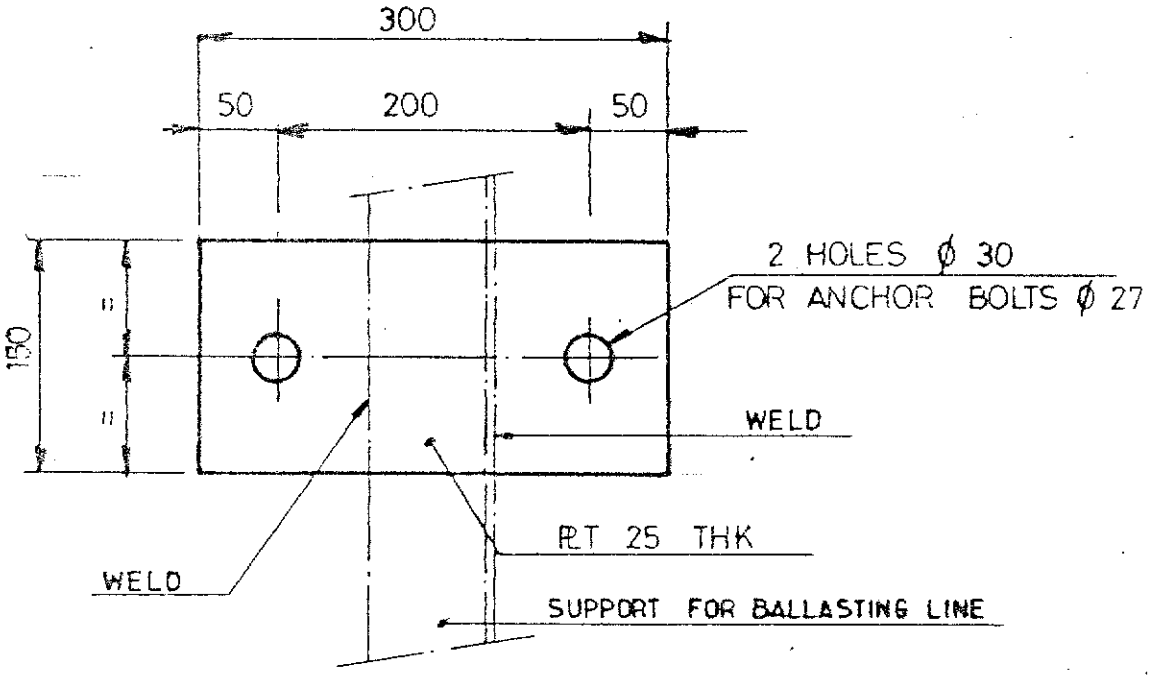

NOTES

FOR LOCATION OF PLATES SEE SK. FF 91-36-35-1130
TYPICAL ANCHOR BOLTS SEE SK. FF 91-36-35-1320
FOR SUPPORT DETAIL SEE SK. FF 91-36-35-1133

Rev.	Date	DESCRIPTION	by	app.
1	16-83	UPDATED	S-LC	S-LC

Contractor JVD 1029_30_02

elf aquitaine norge a/s
p.o.box 168
4001 Stavanger

elf
FRIGG FIELD

Job no.	Installation	System
	CDP 1	UNDERWATER
Scale 1/5	BASE PLATE TYPE D43	
Dwgr. no FF 91-36-35-1131		1

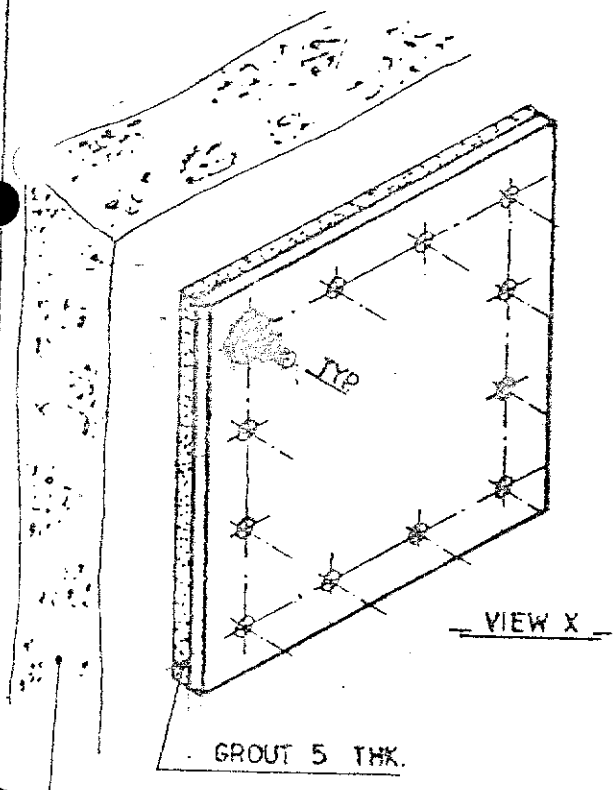

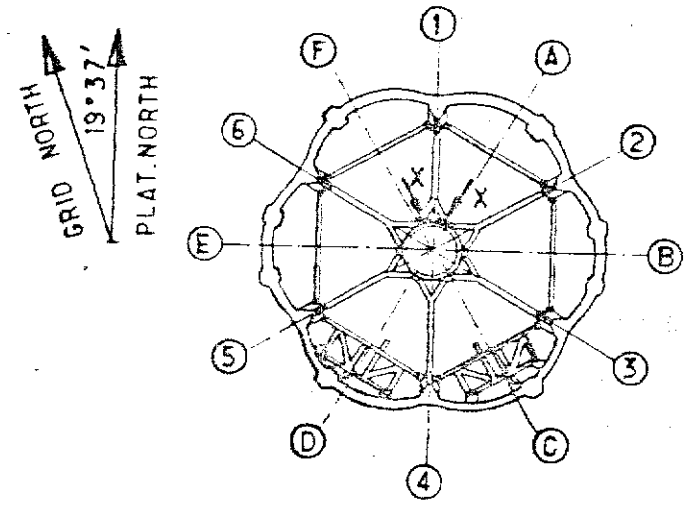

KEY PLAN

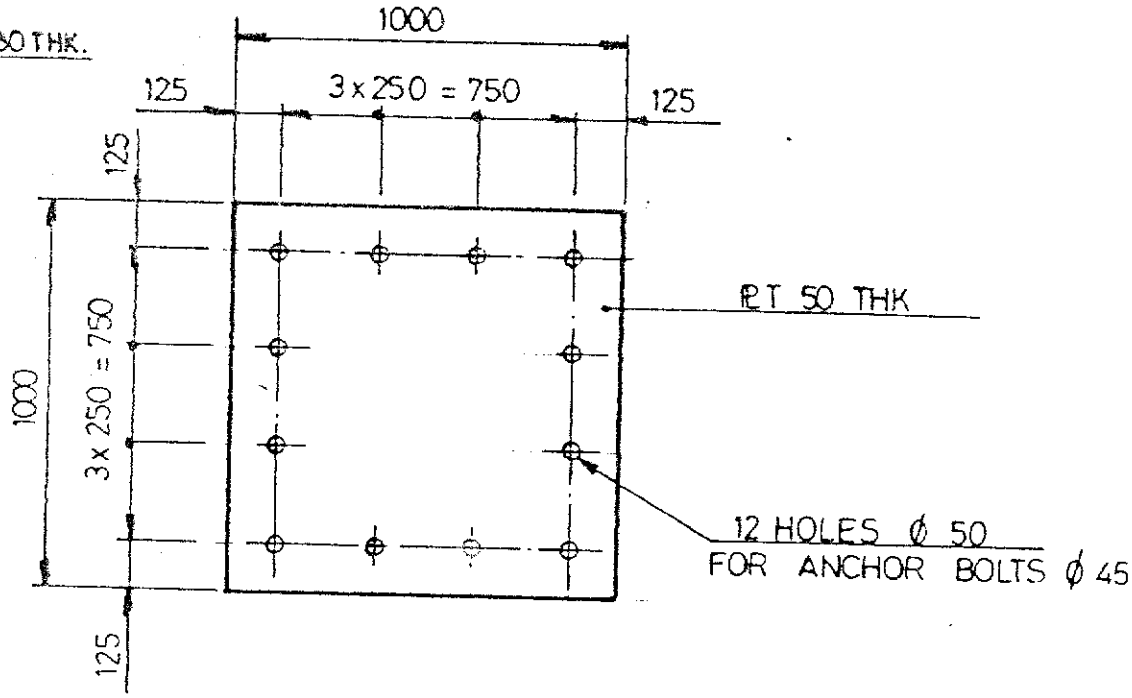

NOTES

FOR LOCATION OF PLATE SEE SK. FF-91-36-35-1130 _1063 _ 1064.

TYPICAL ANCHOR BOLTS SEE SK. FF-91-36-35-1320

NOTHING IS WELDED ON ALL PLATES TYPE D 51 PRESENCE OF PLATES TO BE CHECKED.

Rev.	Date	DESCRIPTION	by	app.
1	18-83	UPDATED	FLC	JLC

Contractor JVD 1029_30_03

elf aquitaine norge a/s
p.o.box 168
4001 Stavanger

elf

FRIGG FIELD

Job no.	Installation	System
	CDP 1	UNDERWATER
Scale 1/20	BASE PLATE TYPE D51	
Dwgr. no. FF 91-36-35-1132	Rev. 1	Sheet

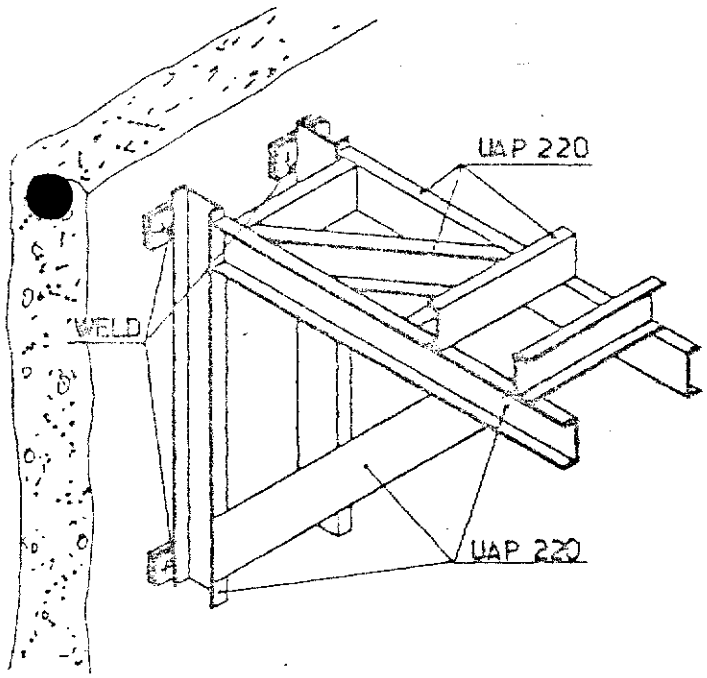

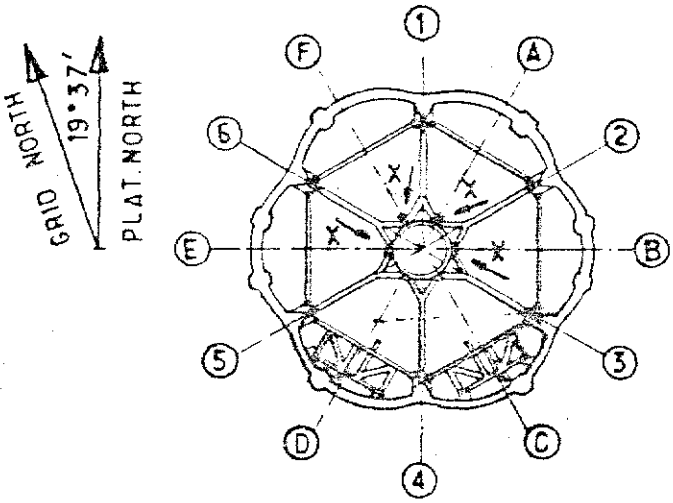

KEY PLAN

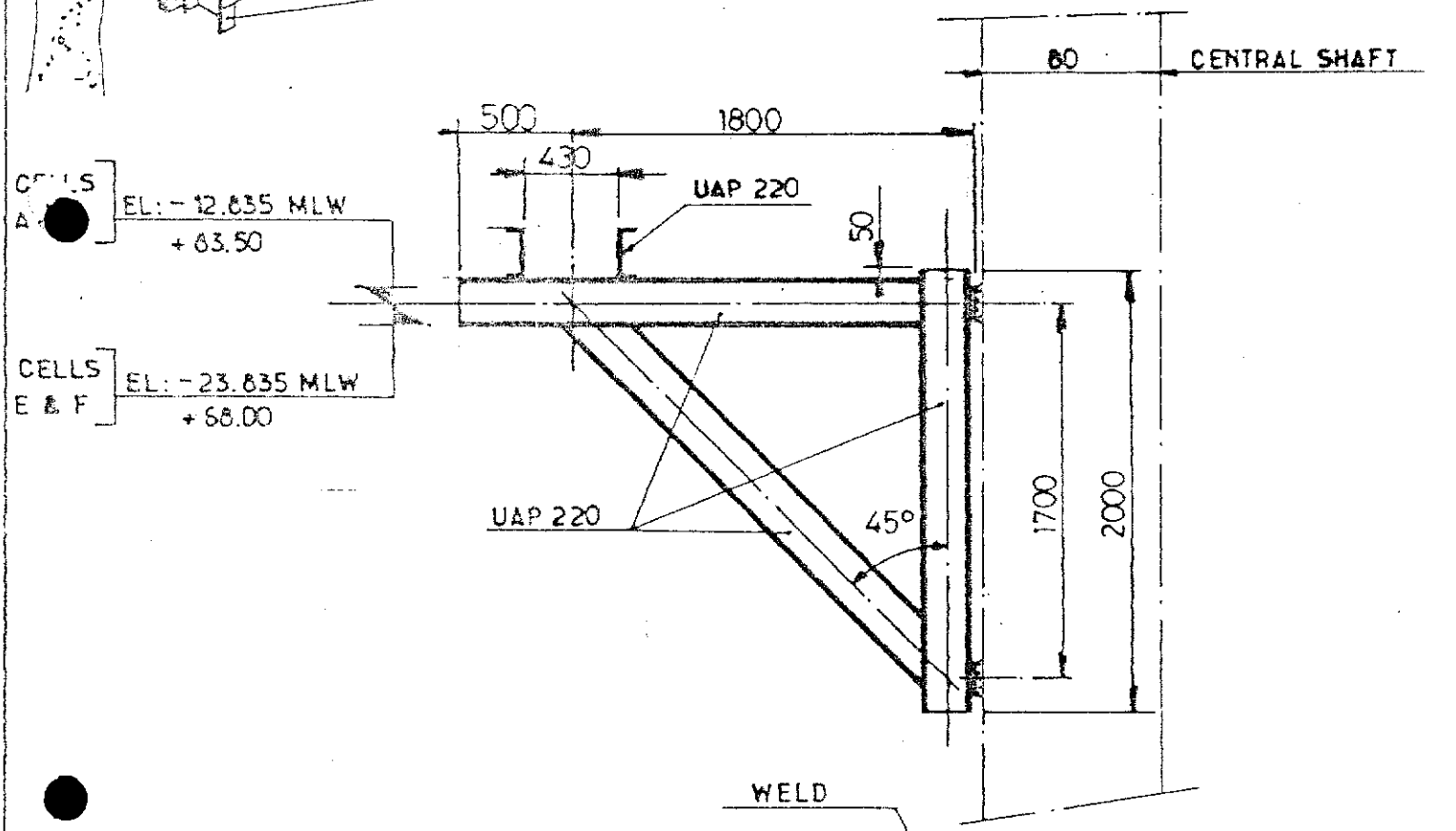

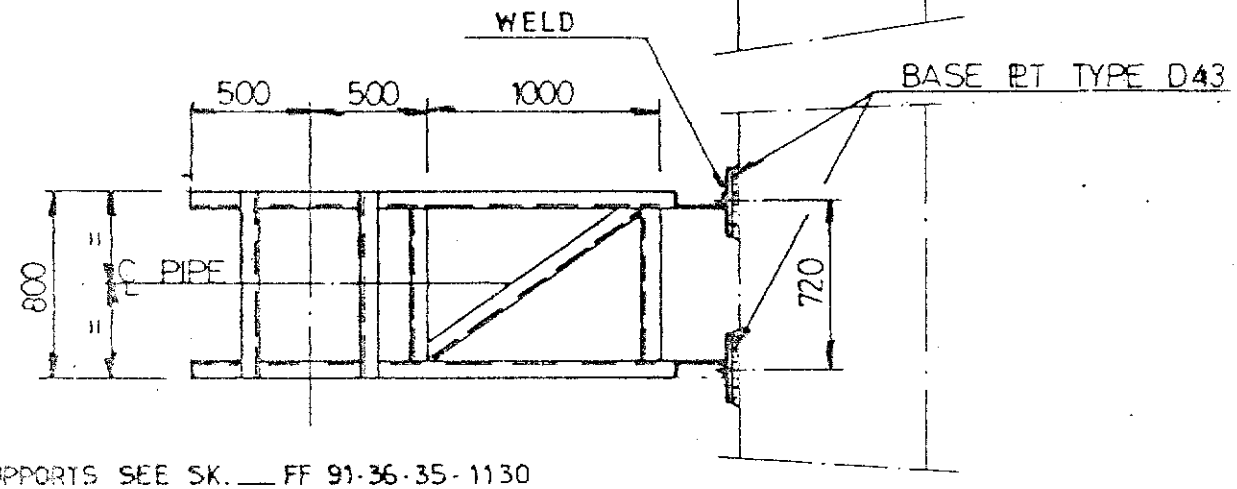

NOTES

FOR LOCATION OF SUPPORTS SEE SK. FF 91-36-35-1130
BASE PLATES D43 SEE SK. FF 91-36-35-1131
24" DIA. BALLASTING LINES DO NOT EXIT ANYMORE. ALL SUPPORTS HAVE BEEN REMOVED

Rev.	Date	DESCRIPTION	by	app.
1	10.85	UPDATED	HLC	HLC

Contractor JVD 1029_30_04

elf aquitaine norge a/s
p.o.box 168
4001 Stavanger

elf
FRIGG FIELD

Job no.	Installation	System
	CDP 1	UNDERWATER
Scale 1:33⅓	SUPPORT FOR BALLASTING LINE	
Dwgr. no. FF 91-36-35-1133	Rev. 1	Sheet /

Form 100 318

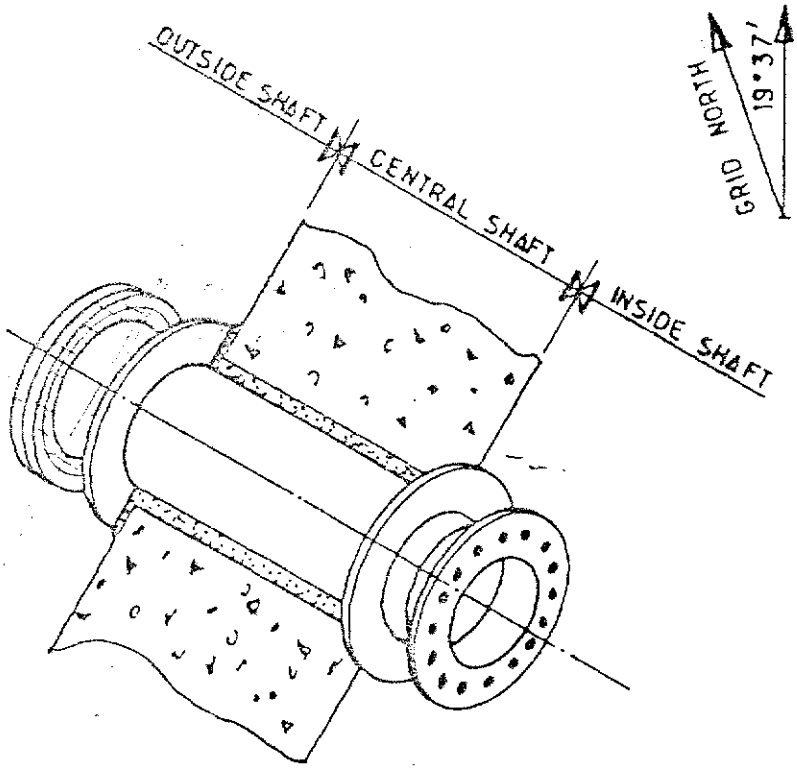

_ VIEW X _

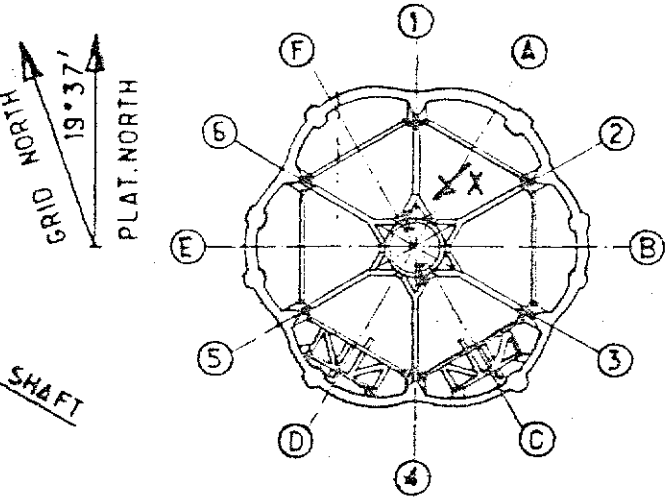

KEY PLAN

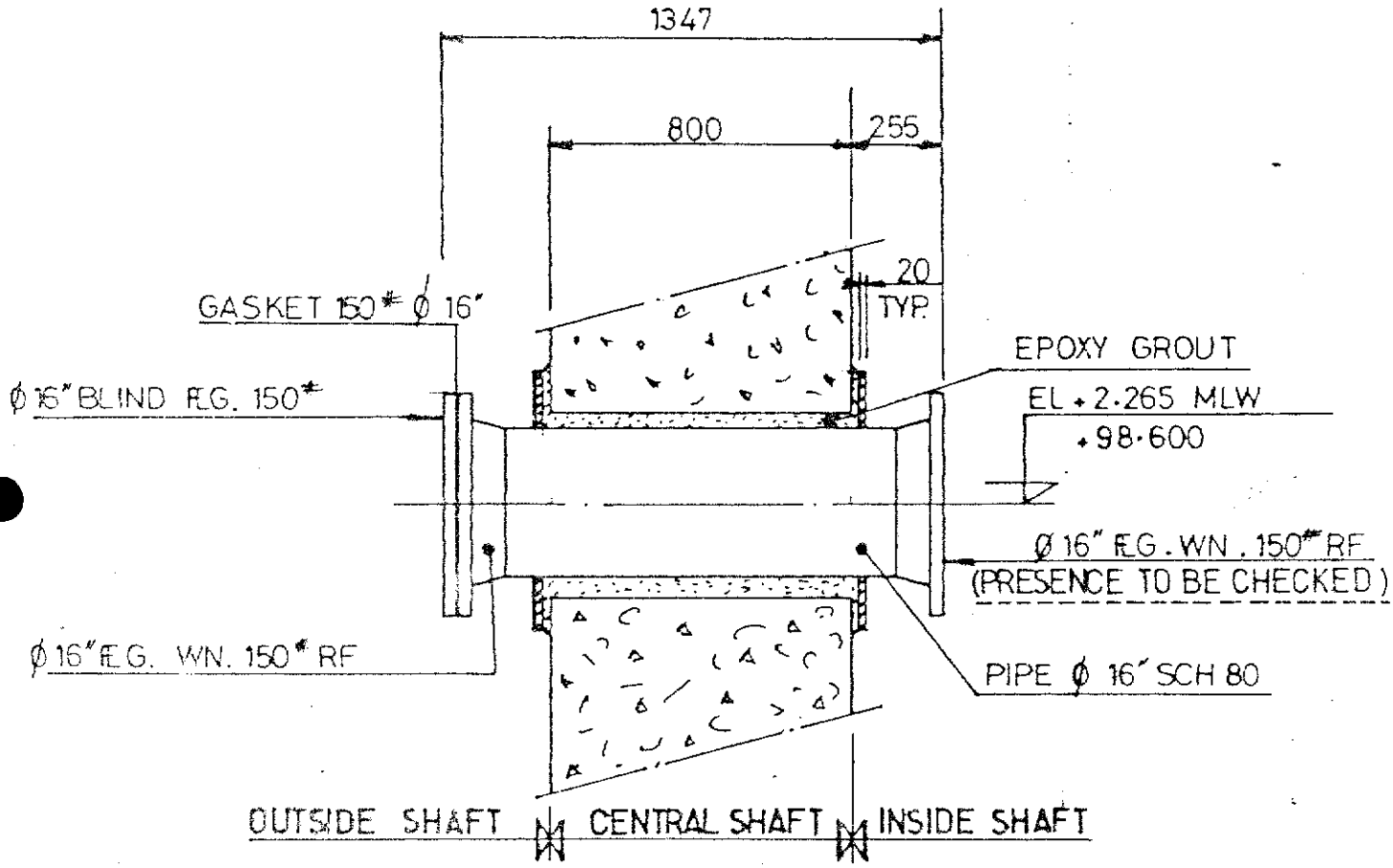

NOTES: _FOR LOCATION SEE SK._FF 91_36_35_1130

Rev.	Date	DESCRIPTION	by	app.
1	12/83	UPDATED	m.	

Contractor JVD 1029_30_05

elf aquitaine norge a/s
p.o.box 168
4001 Stavanger

elf
FRIGG FIELD

Job no.	Installation	System
	CDP 1	UNDERWATER
Scale 1 20	2 x 16"DIA. WATER EQUALIZING APERTURES	
Dwgr. no. FF 91_36_35_1134	Rev 1	Sheet /

Form 100 318

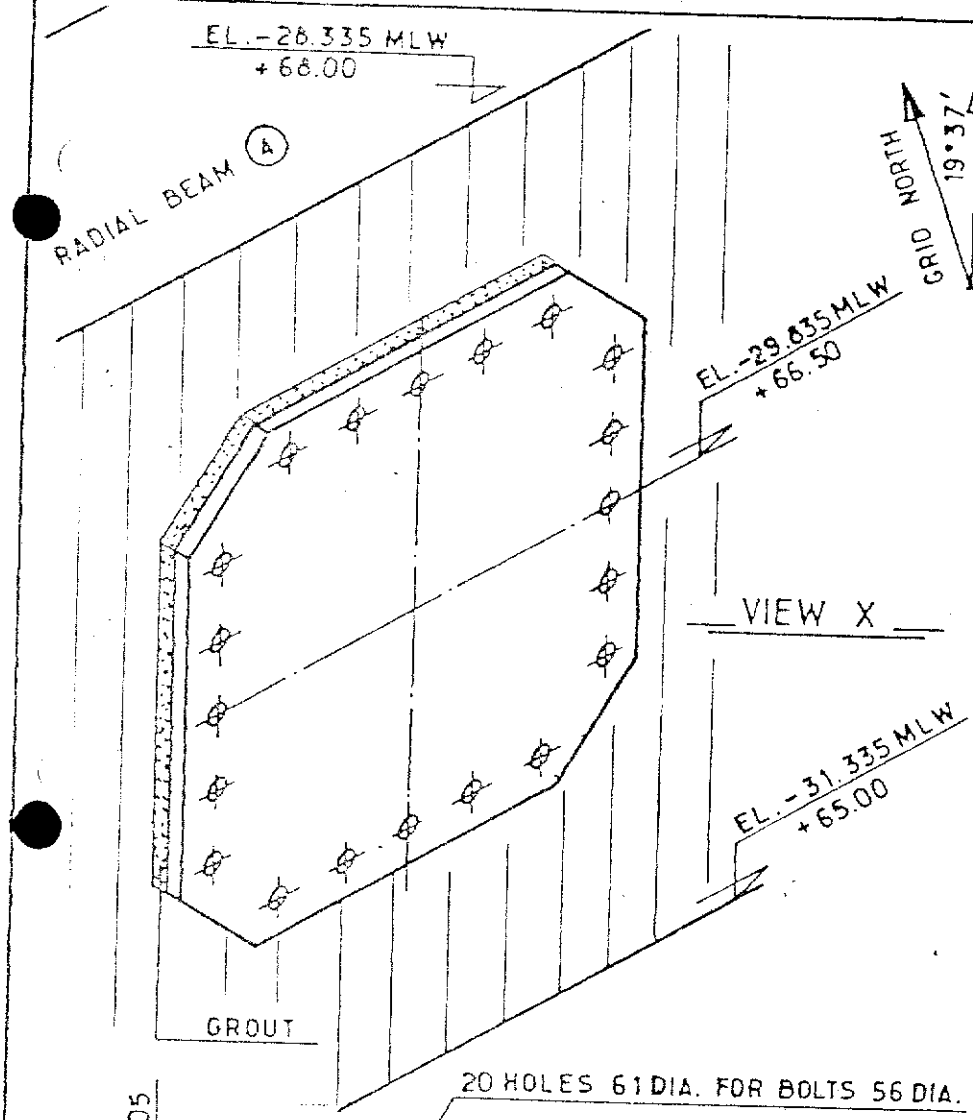

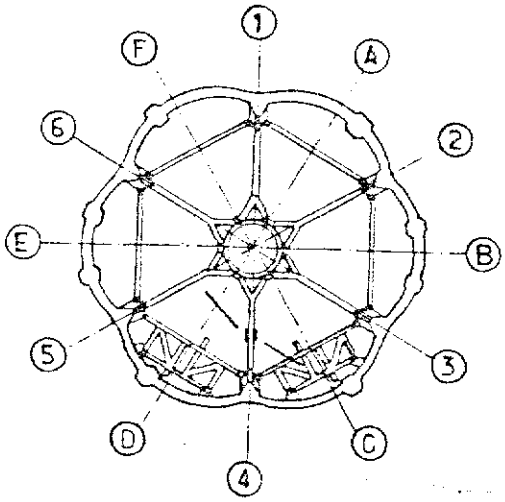

KEY PLAN

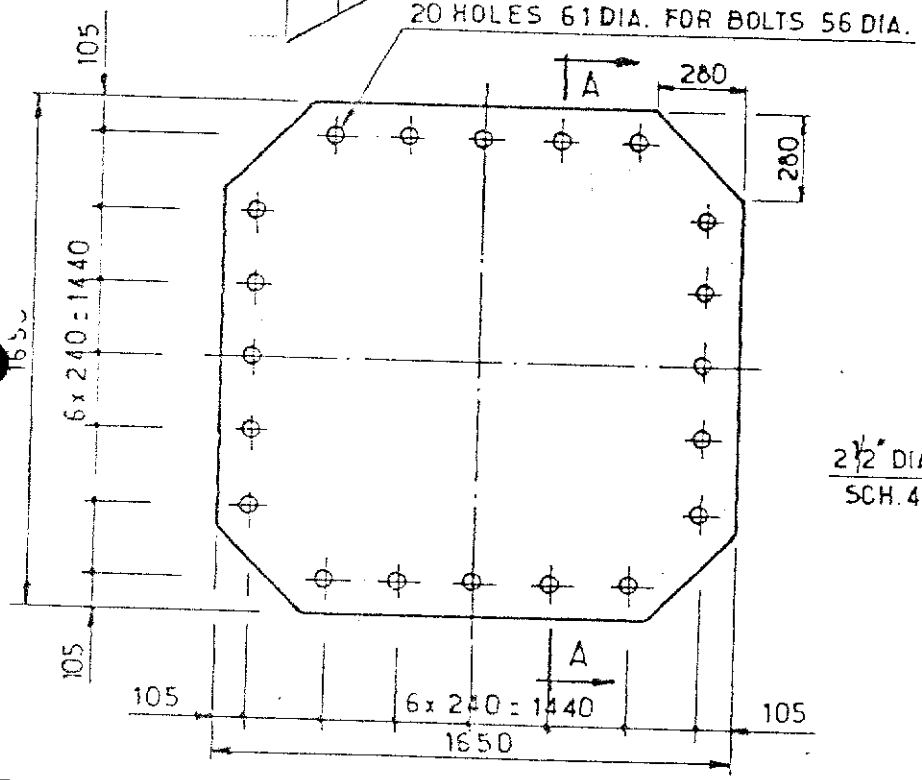

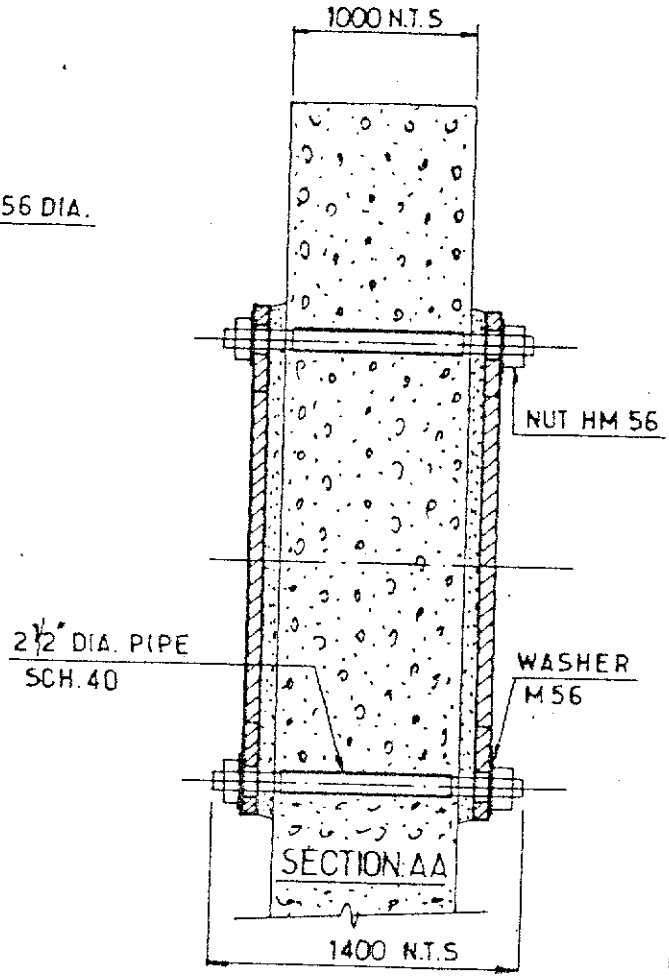

NOTES

FOR LOCATION SEE SK. FF 91-36-35.

PRESENCE OF BASE PLATES TYPE 21 TO BE CHECKED.

Rev.	Date	DESCRIPTION	by	app.
1	11-83	REDRAWN	H.C	H.C

Contractor JVD 1029-30.

elf aquitaine norge a/s
p.o.box 168
4001 Stavanger

elf

FRIGG FIELD

Job no.	Installation	System
	CDP 1	UNDERWATER
Scale 1:25	BASE PLATES TYPE 21 FOR DEEP WELL PUMP CASING	
Dwgr. no. FF 91-36-35.	Rev. 1	Sheet

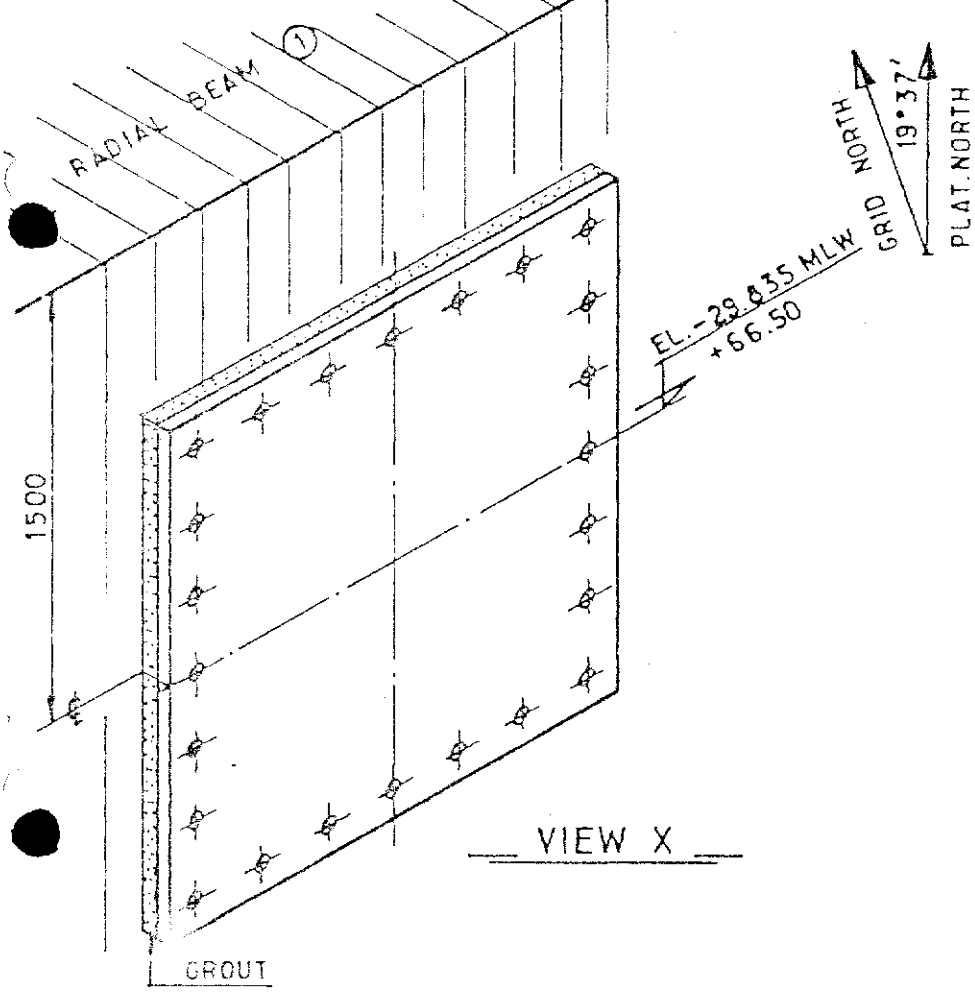

VIEW X

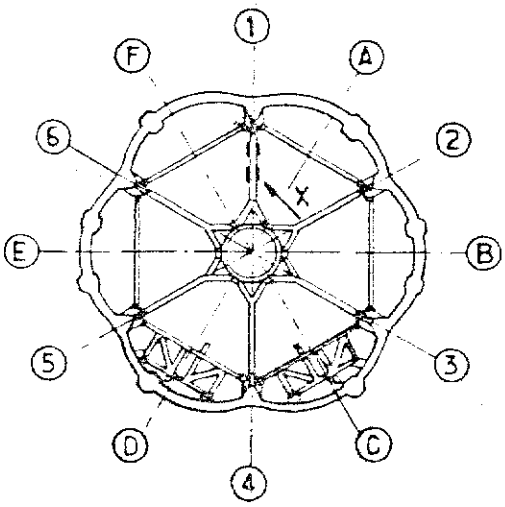

KEY PLAN

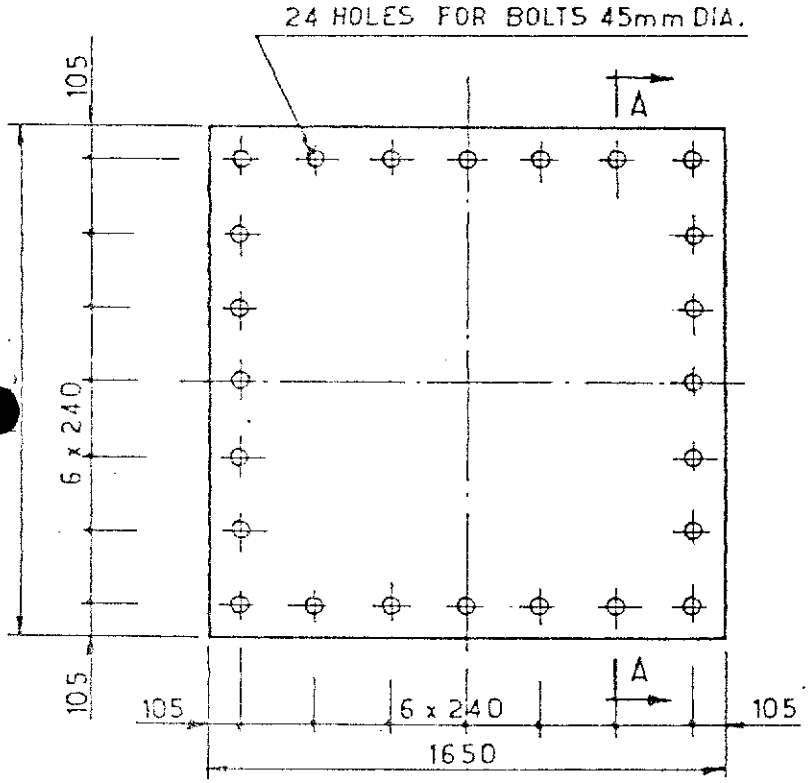

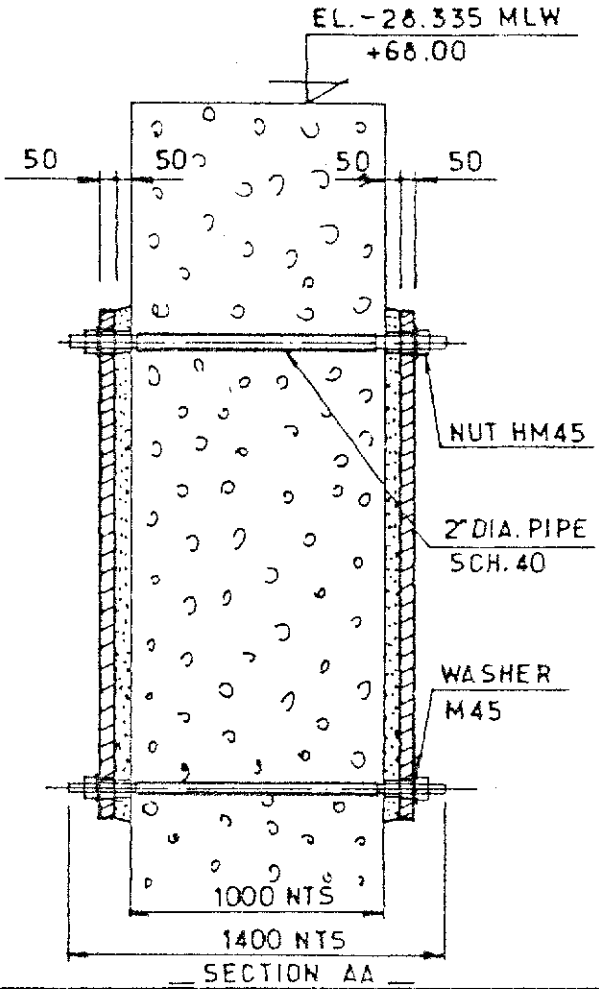

SECTION AA

NOTES

FOR LOCATION OF PLATE D49 SEE SK. FF 91-36-35.

PRESENCE OF PLATES (4 OFF) TO BE CHECKED.

Rev.	Date	DESCRIPTION	by	app.
1	11.83	REDRAWN	HC	HC

Contractor JVD 1029-30.

elf aquitaine norge a/s
p.o.box 168
4001 Stavanger

elf
FRIGG FIELD

Job no.	Installation	System
	CDP 1	UNDERWATER
Scale 1:25	BASE PLATE TYPE D 49 FOR GUIDE PIPE PUMPS.	
Dwgr. no. FF 91-36-35.	Rev. 1	Sheet

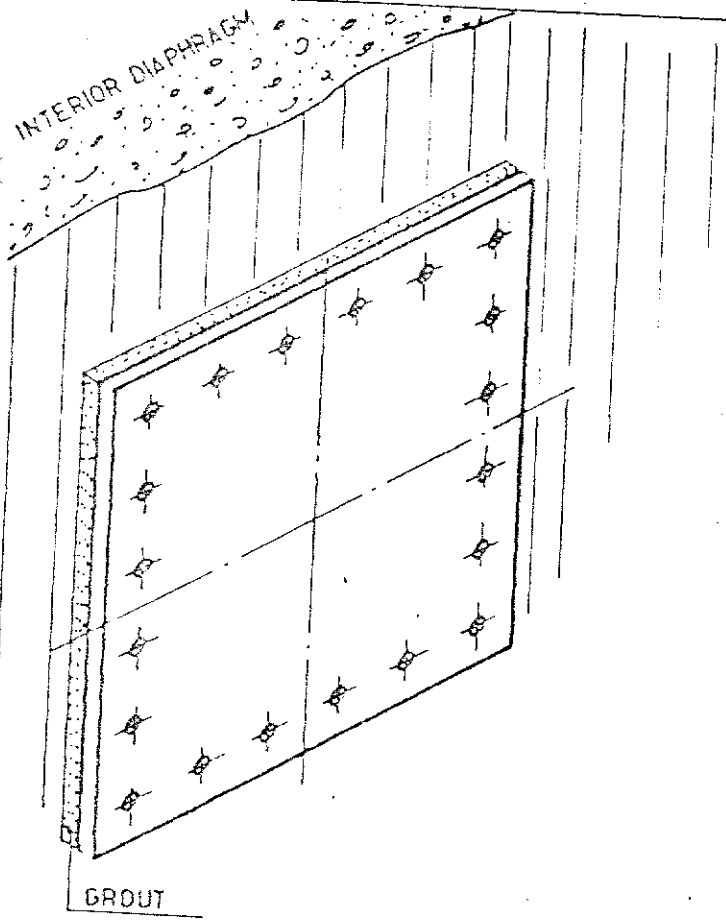

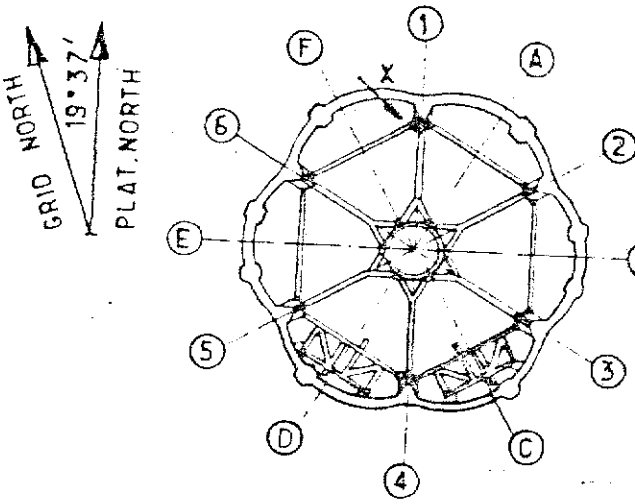

KEY PLAN

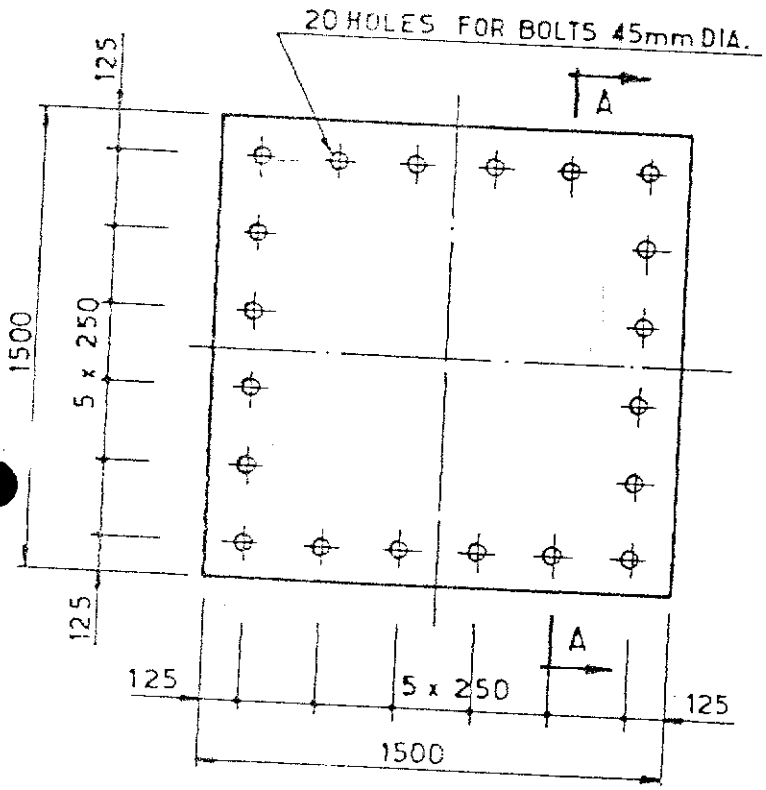

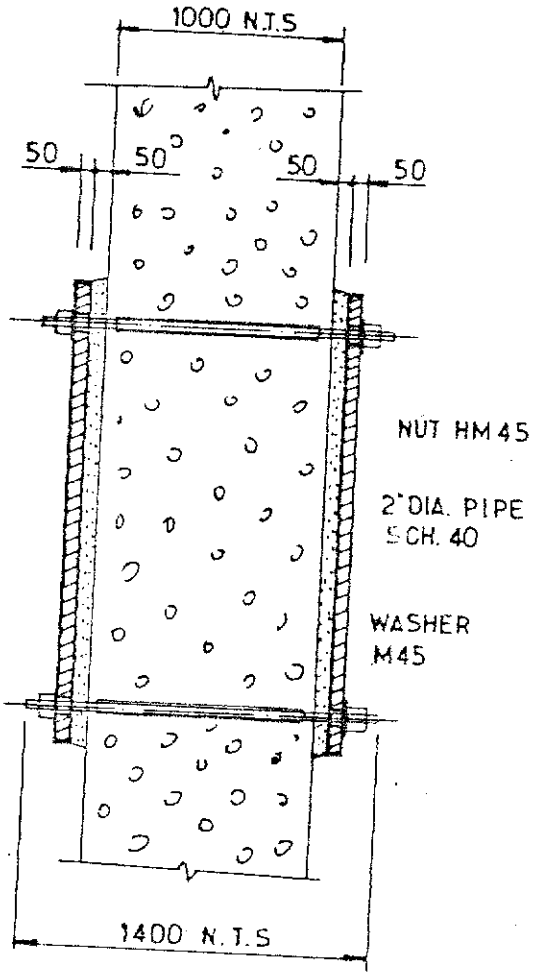

SECTION A-A

NOTES

FOR LOCATION OF PLATES D 50 SEE SK. FF 91-36-35.

PRESENCE OF PLATES (6 OFF) TO BE CHECKED.

Rev.	Date	DESCRIPTION	by	app.
1	11-83	REDRAWN	JAS	JAC

Contractor JVD 1029-30.

elf aquitaine norge a/s
p.o.box 168
4001 Stavanger

elf

FRIGG FIELD

Job no.	Installation	System
	CDP 1	UNDERWATER
Scale 1:25	BASE PLATE TYPE D 50 FOR GUIDE PIPE PUMPS.	
Dwgr. no. FF 91-36-35.	Rev. 1	Sheet