elf aquitaine norge a/s

CDP 1

SUBSEA

AS BUILT FILE

VOLUME 5

4. CONDUCTOR GUIDE FRAME

DRAWING TITLE	E.A.N DRAWING No
REFERENCE LEVELS OF GUIDE FRAME	FF 91 36 35 - 1330
GENERAL PLAN VIEW WITH CONDUCTOR NUMBER	FF 91 36 35 - 1331
4.1. CONDUCTOR GUIDE FRAMES LEVEL "G"	
4.1.1. CELL "C"	
GENERAL VIEW OF GUIDE FRAME	FF 91 36 35 - 1332
GENERAL VIEW OF SECONDARY FRAME SUPPORTS	FF 91 36 35 - 1333
SECONDARY FRAME FOR CONDUCTOR N° 13	FF 91 36 35 - 1334
SECONDARY FRAME FOR CONDUCTOR N° 14	FF 91 36 35 - 1335
SECONDARY FRAME FOR CONDUCTOR N° 15	FF 91 36 35 - 1336
SECONDARY FRAME FOR CONDUCTOR N° 16	FF 91 36 35 - 1337
SECONDARY FRAME FOR CONDUCTOR N° 17	FF 91 36 35 - 1338
SECONDARY FRAME FOR CONDUCTOR N° 18	FF 91 36 35 - 1339
SECONDARY FRAME FOR CONDUCTOR N° 19	FF 91 36 35 - 1340
SECONDARY FRAME FOR CONDUCTOR N° 20	FF 91 36 35 - 1341
SECONDARY FRAME FOR CONDUCTOR N° 21	FF 91 36 35 - 1342
SECONDARY FRAME FOR CONDUCTOR N° 22	FF 91 36 35 - 1343
SECONDARY FRAME FOR CONDUCTOR N° 23	FF 91 36 35 - 1344
SECONDARY FRAME FOR CONDUCTOR N° 24	FF 91 36 35 - 1345
FREE LOCK PIPE END GC1	FF 91 36 35 - 1346
FREE LOCK PIPE END GC4	FF 91 36 35 - 1347
BOX FOR FREE LOCK GC1	FF 91 36 35 - 1348
BOX FOR FREE LOCK GC4	FF 91 36 35 - 1349
RESERVED	FF 91 36 35 - 1350 TO 1354

4. CONDUCTOR GUIDE FRAME

DRAWING TITLE	E.A.N DRAWING No
4.1.2. CELL "D"	
GENERAL VIEW OF GUIDE FRAME	FF 91 36 35 - 1355
GENERAL VIEW OF SECONDARY FRAME SUPPORTS	FF 91 36 35 - 1356
SECONDARY FRAME FOR CONDUCTOR N° 1	FF 91 36 35 - 1357
SECONDARY FRAME FOR CONDUCTOR N° 2	FF 91 36 35 - 1358
SECONDARY FRAME FOR CONDUCTOR N° 3	FF 91 36 35 - 1359
SECONDARY FRAME FOR CONDUCTOR N° 4	FF 91 36 35 - 1360
SECONDARY FRAME FOR CONDUCTOR N° 5	FF 91 36 35 - 1361
SECONDARY FRAME FOR CONDUCTOR N° 6	FF 91 36 35 - 1362
SECONDARY FRAME FOR CONDUCTOR N° 7	FF 91 36 35 - 1363
SECONDARY FRAME FOR CONDUCTOR N° 8	FF 91 36 35 - 1364
SECONDARY FRAME FOR CONDUCTOR N° 9	FF 91 36 35 - 1365
SECONDARY FRAME FOR CONDUCTOR N° 10	FF 91 36 35 - 1366
SECONDARY FRAME FOR CONDUCTOR N° 11	FF 91 36 35 - 1367
SECONDARY FRAME FOR CONDUCTOR N° 12	FF 91 36 35 - 1368
FREE LOCK PIPE END GD1	FF 91 36 35 - 1369
FREE LOCK PIPE END GD4	FF 91 36 35 - 1370
BOX FOR FREE LOCK GD1	FF 91 36 35 - 1371
BOX FOR FREE LOCK GD4	FF 91 36 35 - 1372
RESERVED	FF 91 36 35 - 1373
RESERVED	FF 91 36 35 - 1374
RESERVED	FF 91 36 35 - 1375
RESERVED	FF 91 36 35 - 1376
RESERVED	FF 91 36 35 - 1377

4. CONDUCTOR GUIDE FRAME

DRAWING TITLE	E.A.N DRAWING No
4.2. CONDUCTOR GUIDE FRAMES LEVEL "E"	
4.2.1. CELL "C"	
GENERAL VIEW OF GUIDE FRAME	FF 91 36 35 - 1378
GENERAL VIEW OF SECONDARY FRAME SUPPORTS	FF 91 36 35 - 1379
SECONDARY FRAME FOR CONDUCTOR N° 13	FF 91 36 35 - 1380
SECONDARY FRAME FOR CONDUCTOR N° 14	FF 91 36 35 - 1381
SECONDARY FRAME FOR CONDUCTOR N° 15	FF 91 36 35 - 1382
SECONDARY FRAME FOR CONDUCTOR N° 16	FF 91 36 35 - 1383
SECONDARY FRAME FOR CONDUCTOR N° 17	FF 91 36 35 - 1384
SECONDARY FRAME FOR CONDUCTOR N° 18	FF 91 36 35 - 1385
SECONDARY FRAME FOR CONDUCTOR N° 19	FF 91 36 35 - 1386
SECONDARY FRAME FOR CONDUCTOR N° 20	FF 91 36 35 - 1387
SECONDARY FRAME FOR CONDUCTOR N° 21	FF 91 36 35 - 1388
SECONDARY FRAME FOR CONDUCTOR N° 22	FF 91 36 35 - 1389
SECONDARY FRAME FOR CONDUCTOR N° 23	FF 91 36 35 - 1390
SECONDARY FRAME FOR CONDUCTOR N° 24	FF 91 36 35 - 1391
FREE LOCK PIPE END EC1	FF 91 36 35 - 1392
FREE LOCK PIPE END EC4	FF 91 36 35 - 1393
BOX FOR FREE LOCK EC1	FF 91 36 35 - 1394
BOX FOR FREE LOCK EC4	FF 91 36 35 - 1395
RESERVED	FF 91 36 35 - 1396
RESERVED	FF 91 36 35 - 1397
RESERVED	FF 91 36 35 - 1398
RESERVED	FF 91 36 35 - 1399

4. CONDUCTOR GUIDE FRAME

DRAWING TITLE	E.A.N DRAWING No
4.2.2. CELL "D"	
GENERAL VIEW OF GUIDE FRAME	FF 91 36 35 - 1400
GENERAL VIEW OF SECONDARY FRAME SUPPORTS	FF 91 36 35 - 1401
SECONDARY FRAME FOR CONDUCTOR N° 1	FF 91 36 35 - 1402
SECONDARY FRAME FOR CONDUCTOR N° 2	FF 91 36 35 - 1403
SECONDARY FRAME FOR CONDUCTOR N° 3	FF 91 36 35 - 1404
SECONDARY FRAME FOR CONDUCTOR N° 4	FF 91 36 35 - 1405
SECONDARY FRAME FOR CONDUCTOR N° 5	FF 91 36 35 - 1406
SECONDARY FRAME FOR CONDUCTOR N° 6	FF 91 36 35 - 1407
SECONDARY FRAME FOR CONDUCTOR N° 7	FF 91 36 35 - 1408
SECONDARY FRAME FOR CONDUCTOR N° 8	FF 91 36 35 - 1409
SECONDARY FRAME FOR CONDUCTOR N° 9	FF 91 36 35 - 1410
SECONDARY FRAME FOR CONDUCTOR N° 10	FF 91 36 35 - 1411
SECONDARY FRAME FOR CONDUCTOR N° 11	FF 91 36 35 - 1412
SECONDARY FRAME FOR CONDUCTOR N° 12	FF 91 36 35 - 1413
FREE LOCK PIPE END ED1	FF 91 36 35 - 1414
FREE LOCK PIPE END ED4	FF 91 36 35 - 1415
BOX FOR FREE LOCK ED1	FF 91 36 35 - 1416
BOX FOR FREE LOCK ED4	FF 91 36 35 - 1417
RESERVED	FF 91 36 35 - 1418
RESERVED	FF 91 36 35 - 1419
RESERVED	FF 91 36 35 - 1420
RESERVED	FF 91 36 35 - 1421

4. CONDUCTOR GUIDE FRAME

DRAWING TITLE	E.A.N DRAWING No
4.3. CONDUCTOR GUIDE FRAMES LEVEL "D"	
4.3.1. CELL "C"	
GENERAL VIEW OF GUIDE FRAME	FF 91 36 35 - 1422
GENERAL VIEW OF SECONDARY FRAME SUPPORTS	FF 91 36 35 - 1423
SECONDARY FRAME FOR CONDUCTOR N° 13	FF 91 36 35 - 1424
SECONDARY FRAME FOR CONDUCTOR N° 14	FF 91 36 35 - 1425
SECONDARY FRAME FOR CONDUCTOR N° 15	FF 91 36 35 - 1426
SECONDARY FRAME FOR CONDUCTOR N° 16	FF 91 36 35 - 1427
SECONDARY FRAME FOR CONDUCTOR N° 17	FF 91 36 35 - 1428
SECONDARY FRAME FOR CONDUCTOR N° 18	FF 91 36 35 - 1429
SECONDARY FRAME FOR CONDUCTOR N° 19	FF 91 36 35 - 1430
SECONDARY FRAME FOR CONDUCTOR N° 20	FF 91 36 35 - 1431
SECONDARY FRAME FOR CONDUCTOR N° 21	FF 91 36 35 - 1432
SECONDARY FRAME FOR CONDUCTOR N° 22	FF 91 36 35 - 1433
SECONDARY FRAME FOR CONDUCTOR N° 23	FF 91 36 35 - 1434
SECONDARY FRAME FOR CONDUCTOR N° 24	FF 91 36 35 - 1435
FREE LOCK PIPE END DC1	FF 91 36 35 - 1436
FREE LOCK PIPE END DC4	FF 91 36 35 - 1437
BOX FOR FREE LOCK DC1	FF 91 36 35 - 1438
BOX FOR FREE LOCK DC4	FF 91 36 35 - 1439
RESERVED	FF 91 36 35 - 1440
RESERVED	FF 91 36 35 - 1441
RESERVED	FF 91 36 35 - 1442
RESERVED	FF 91 36 35 - 1443

4. CONDUCTOR GUIDE FRAME

DRAWING TITLE	E.A.N DRAWING No
4.3.2. CELL "D"	
GENERAL VIEW OF GUIDE FRAME	FF 91 36 35 - 1444
GENERAL VIEW OF SECONDARY FRAME SUPPORTS	FF 91 36 35 - 1445
SECONDARY FRAME FOR CONDUCTOR N° 1	FF 91 36 35 - 1446
SECONDARY FRAME FOR CONDUCTOR N° 2	FF 91 36 35 - 1447
SECONDARY FRAME FOR CONDUCTOR N° 3	FF 91 36 35 - 1448
SECONDARY FRAME FOR CONDUCTOR N° 4	FF 91 36 35 - 1449
SECONDARY FRAME FOR CONDUCTOR N° 5	FF 91 36 35 - 1450
SECONDARY FRAME FOR CONDUCTOR N° 6	FF 91 36 35 - 1451
SECONDARY FRAME FOR CONDUCTOR N° 7	FF 91 36 35 - 1452
SECONDARY FRAME FOR CONDUCTOR N° 8	FF 91 36 35 - 1453
SECONDARY FRAME FOR CONDUCTOR N° 9	FF 91 36 35 - 1454
SECONDARY FRAME FOR CONDUCTOR N° 10	FF 91 36 35 - 1455
SECONDARY FRAME FOR CONDUCTOR N° 11	FF 91 36 35 - 1456
SECONDARY FRAME FOR CONDUCTOR N° 12	FF 91 36 35 - 1457
FREE LOCK PIPE END DD1	FF 91 36 35 - 1458
FREE LOCK PIPE END DD4	FF 91 36 35 - 1459
BOX FOR FREE LOCK DD1	FF 91 36 35 - 1460
BOX FOR FREE LOCK DD4	FF 91 36 35 - 1461
RESERVED	FF 91 36 35 - 1462
RESERVED	FF 91 36 35 - 1463
RESERVED	FF 91 36 35 - 1464
RESERVED	FF 91 36 35 - 1465

4. CONDUCTOR GUIDE FRAME

DRAWING TITLE	E.A.N DRAWING No
4.4. CONDUCTOR GUIDE FRAMES LEVEL "C"	
REMAINING PART OF FIXED LOCK C2 IN CELL C	FF 91 36 35 - 1466
REMAINING PART OF FIXED LOCK C3 IN CELL C	FF 91 36 35 - 1467
REMAINING PART OF FIXED LOCK D2 IN CELL D	FF 91 36 35 - 1468
REMAINING PART OF FIXED LOCK D3 IN CELL D	FF 91 36 35 - 1469
BOX FOR FREE LOCK CC1	FF 91 36 35 - 1470
BOX FOR FREE LOCK CC4	FF 91 36 35 - 1471
BOX FOR FREE LOCK CD1	FF 91 36 35 - 1472
BOX FOR FREE LOCK CD4	FF 91 36 35 - 1473
RESERVED	FF 91 36 35 - 1474
RESERVED	FF 91 36 35 - 1475
RESERVED	FF 91 36 35 - 1476
RESERVED	FF 91 36 35 - 1477
4.5. CONDUCTOR GUIDE FRAME LEVEL "B"	
GENERAL VIEW OF GUIDE FRAME CELL "C"	FF 91 36 35 - 1478
GENERAL VIEW OF GUIDE FRAME CELL "D"	FF 91 36 35 - 1479
SECONDARY FRAME TYPE 1	FF 91 36 35 - 1480
SECONDARY FRAME TYPE 2	FF 91 36 35 - 1481
SECONDARY FRAME TYPE 3	FF 91 36 35 - 1482
BOX FOR FREE LOCK BC1	FF 91 36 35 - 1483
BOX FOR FREE LOCK BC4	FF 91 36 35 - 1484
BOX FOR FREE LOCK BD1	FF 91 36 35 - 1485
BOX FOR FREE LOCK BD4	FF 91 36 35 - 1486
RESERVED	FF 91 36 35 - 1487
RESERVED	FF 91 36 35 - 1488

4. CONDUCTOR GUIDE FRAME

	DRAWING TITLE	E.A.N DRAWING No
4.6.	**CONDUCTOR GUIDE FRAME LEVEL "A"**	
	GENERAL VIEW OF GUIDE FRAME CELL "C"	FF 91 36 35 - 1489
	GENERAL VIEW OF GUIDE FRAME CELL "D"	FF 91 36 35 - 1490
4.7.	**MISCELLANEOUS**	
	CONDUCTOR SLEEVE TYPICAL DETAIL	FF 91 36 35 - 1491
	CONDUCTOR PIPE CASING LOCKING DEVICE	FF 91 36 35 - 1492
	RESERVED	FF 91 36 35 - 1493
	RESERVED	FF 91 36 35 - 1494
	RESERVED	FF 91 36 35 - 1495
	RESERVED	FF 91 36 35 - 1496
4.8.	**CONDUCTOR SLEEVES**	
	GENERAL PLAN VIEW CELLS "C" and "D" AT SLAB LEVEL	FF 91 36 35 - 1497
	CONDUCTOR SLEEVE TYPE 1	FF 91 36 35 - 1498
	CONDUCTOR SLEEVE TYPE 2	FF 91 36 35 - 1599
	CONDUCTOR SLEEVE TYPE 3	FF 91 36 35 - 1500
	CONDUCTOR SLEEVE - FUNNEL	FF 91 36 35 - 1501
	RESERVED	FF 91 36 35 - 1502
	RESERVED	FF 91 36 35 - 1503
	RESERVED	FF 91 36 35 - 1504

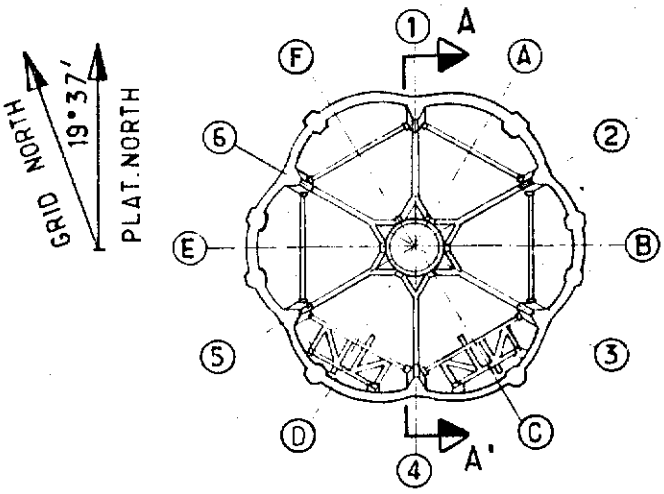

KEY PLAN

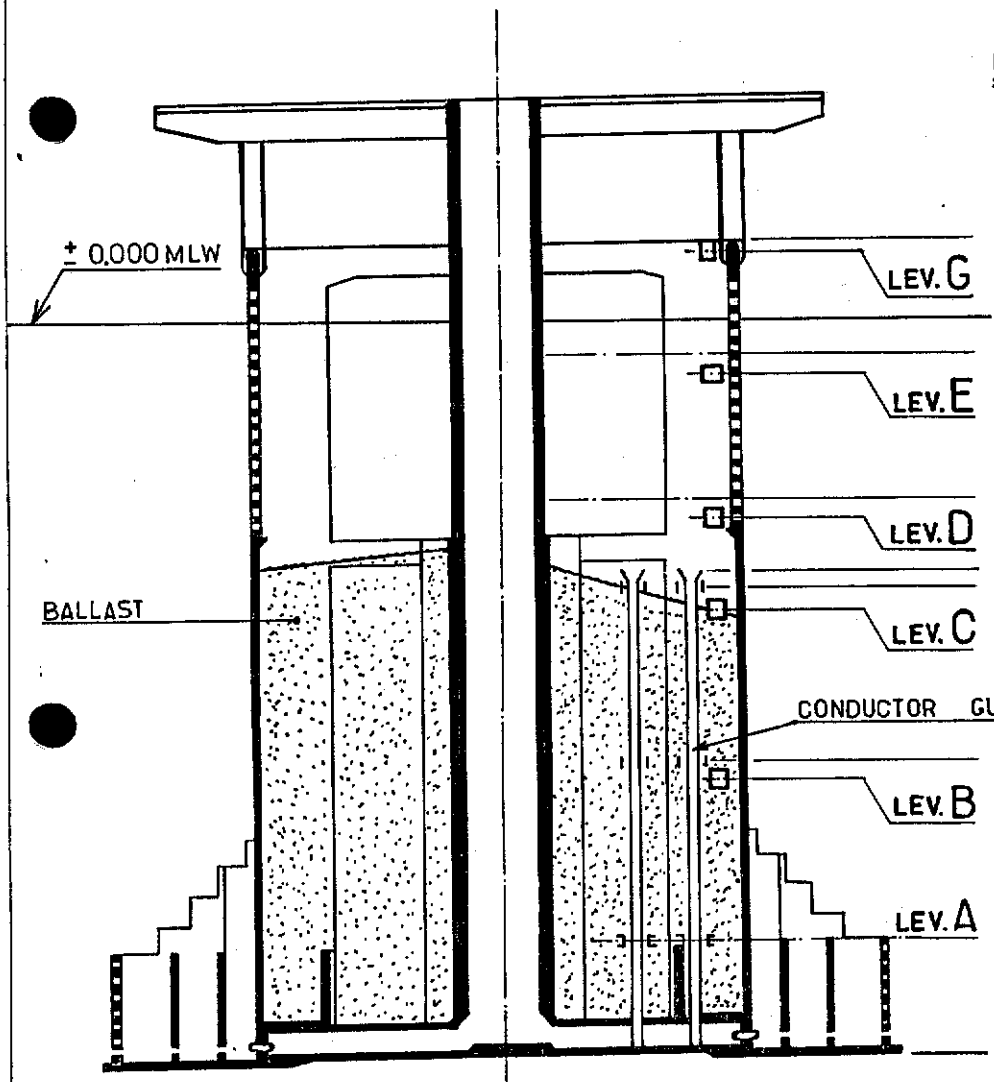

	CONSTRUCTION LEVEL		MLW
	+107.590	FRAME	+11.255
LEV. G	+106.090	SUPPORT	+9.755
	+96.335		± 0.000
	+91.740		-4.595
LEV. E	+90.240		-6.095
	+73.740		-22.595
LEV. D	+72.240		-24.095
	+61.300		-35.035
	+60.500		-35.835
LEV. C	+59.500		-36.835
	+37.500		-58.835
LEV. B	+36.500		-59.835
LEV. A	+15.000		-81.335
	00.000		

SECTION AA'

Rev.	Date	DESCRIPTION	by	app.
1	12.83	UP DATED	BY H	J.C

Contractor JVD 1029_40.00_

elf aquitaine norge a/s
p.o.box 168
4001 Stavanger

elf
FRIGG FIELD

Job no.	Installation	System
	CDP 1	UNDERWATER
Scale /	REFERENCE LEVELS OF GUIDE FRAME	
Dwgr. no. FF. 91.36.35.1330_	Rev. 1	Sheet /

CDP 1 AS BUILT DRAWINGS

REFERENCE DRAWING LIST FOR: CONDUCTOR GUIDE FRAME

ORIGINATOR	CONSTRUCTION DRAWING REF.	TITLE	Rev	Sheet	Size
C. G DORIS	A1-MP. QF 1032	GENERAL PLAN VIEW - SUPPORT OF GUIDE FRAMES	2	-	A1

ELF DRAWING NUMBER	REVISION Index	REVISION Date	TITLE
D.N.V		10-81	CDP 1 IN-SERVICE INSPECTION SYSTEM SECTION 2 FIGURE 12 CONDUCTORS AND GUIDES.

Rev.	Date	DESCRIPTION	by	app.

Contractor

elf aquitaine norge a/s
p.o.box 168
4001 Stavanger

elf
FRIGG FIELD

Job no.	Installation	System
	CDP 1	UNDERWATER
Scale		
Dwgr. no. FF ___ ___ 1330	Rev.	Sheet /

Form 100.318

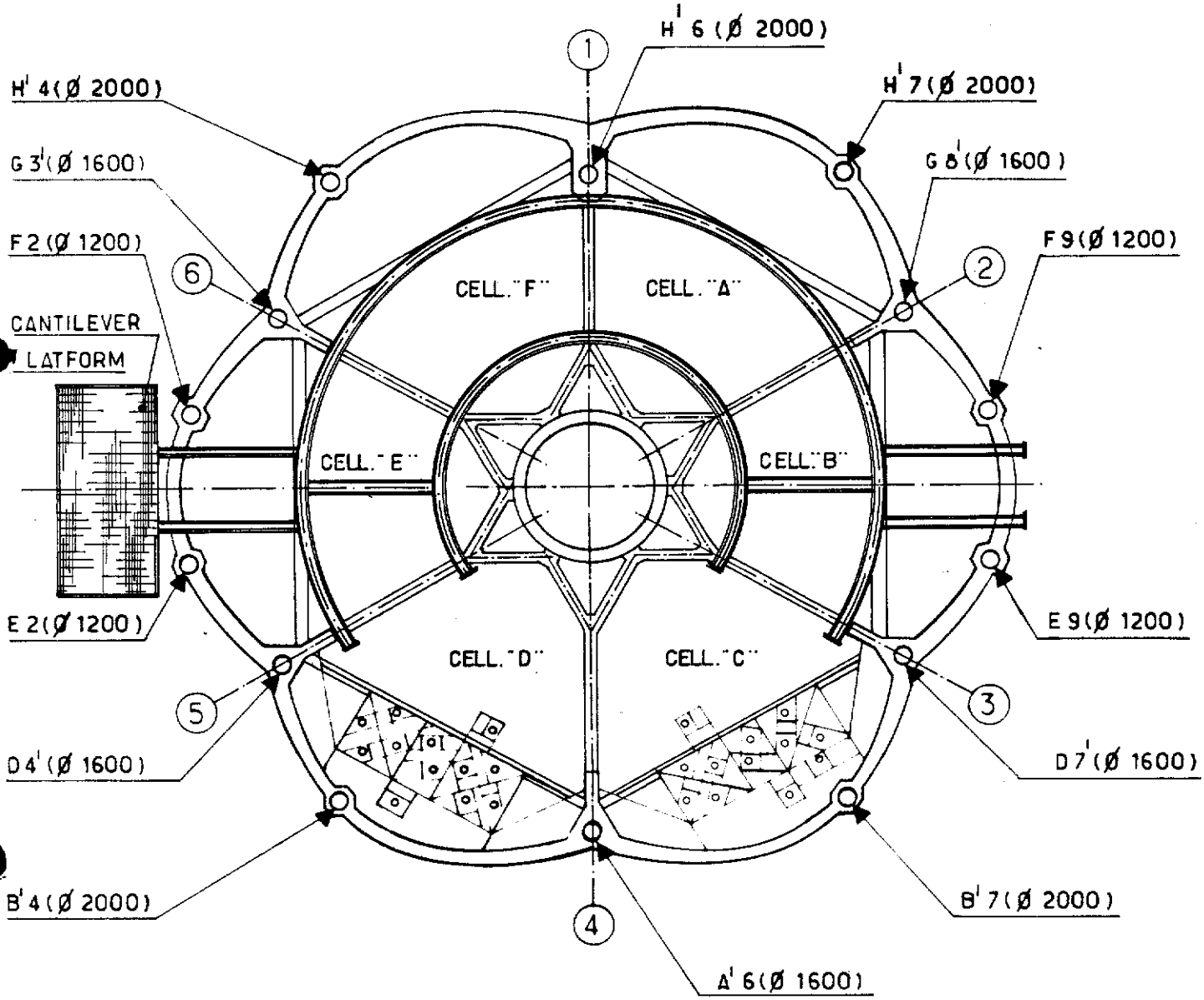

SECTION AT LEVEL + 107.00 M.

TOP OF BREAKWATER WALL

Rev.	Date	DESCRIPTION	by	app.
1	12/83	UPDATED	mira	JLC

Contractor JVD 1029 10_06

elf aquitaine norge a/s
p.o.box 168
4001 Stavanger

elf
FRIGG FIELD

Job no.	Installation	System
	CDP 1	UNDERWATER
Scale /	STEEL COLUMNS LAYOUT	
Dwgr. no. FF 91_36_35_1041	Rev. 1	Sheet /

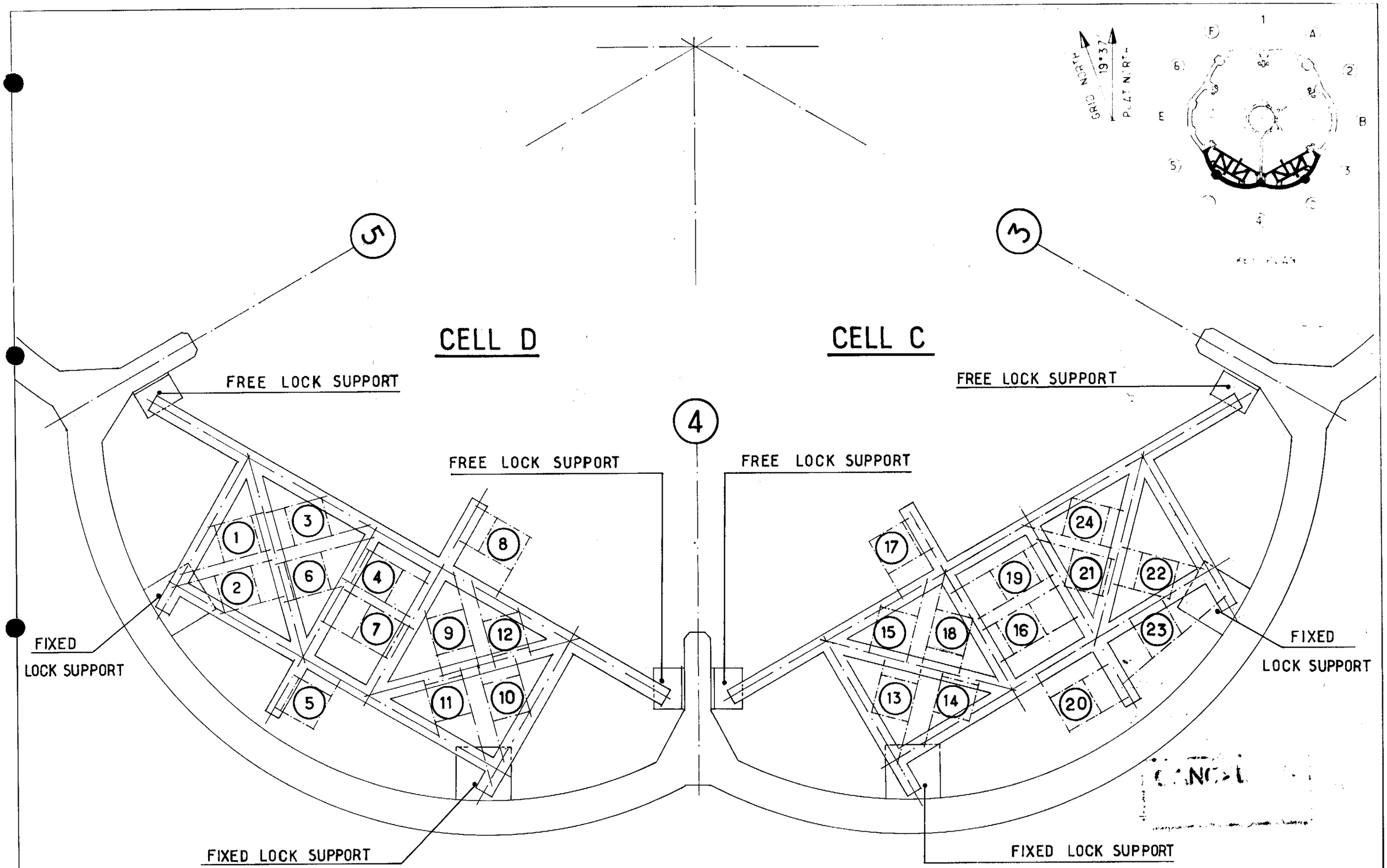

NOTES

1. SEE ALSO SK FF 91-36-35-1043
2. CONDUCTOR GUIDE FRAMES AND SECONDARY FRAME SUPPORTS REMOVED. FOR FURTHER DETAILS REF. MSD TECHNICAL PROCEDURE 5690.

Rev	Date	DESCRIPTION	by	app
02	11/90	NOTE ADDED. REF. SST. 90455		T.C.
1	12.83	UP DATED	B.V.H	J.L.C.

Contractor JVD_1029_40.01_

elf aquitaine norge a s

elf

Job no.	Installation	System
	CDP 1	UNDERWATER
Scale —	GENERAL PLAN VIEW WITH CONDUCTOR NUMBER	
Dwgr no. FF 91-36-35-1331		02

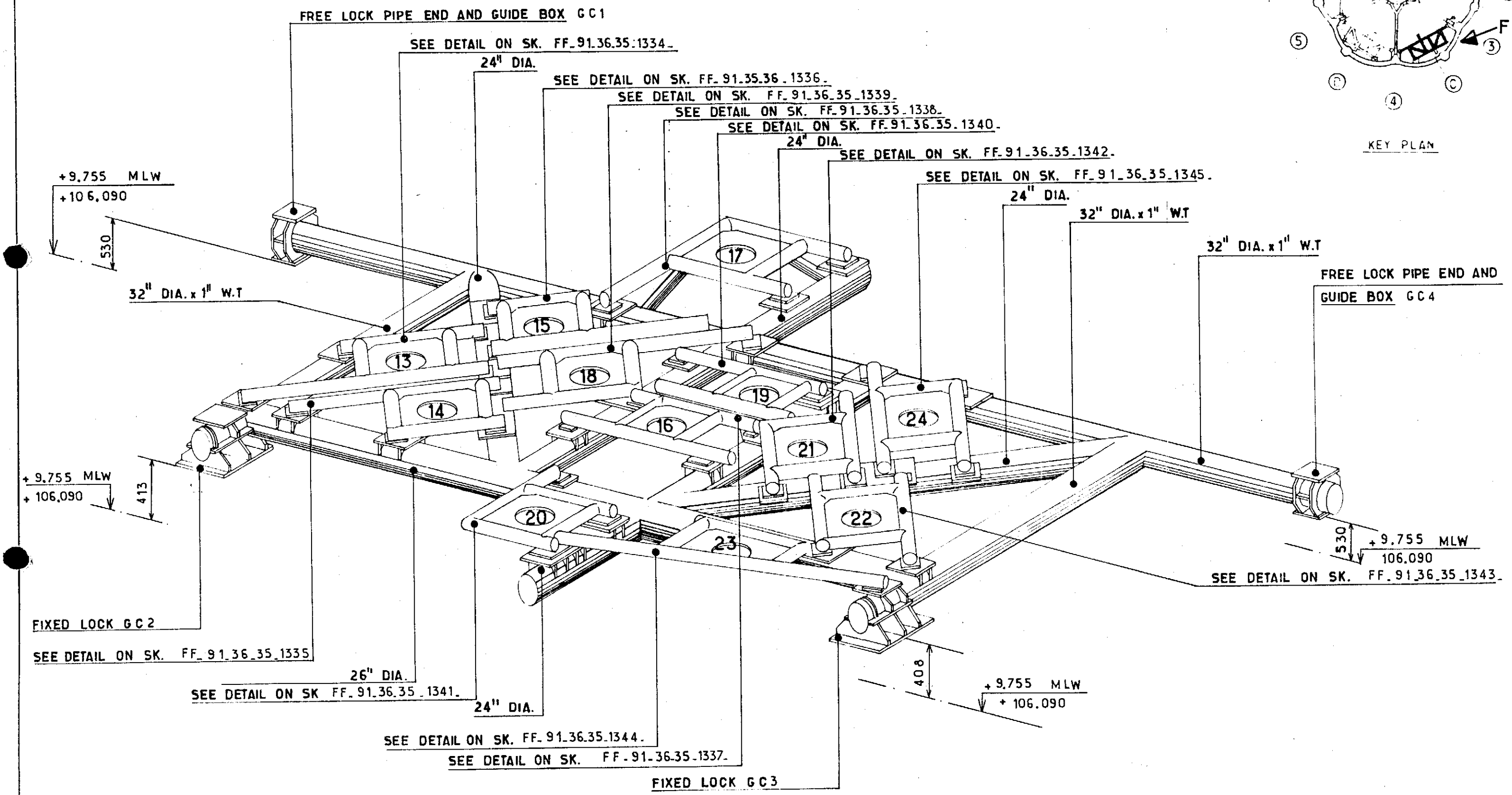

NOTES

FOR FREE LOCK PIPE END AND GUIDE BOX SEE SK FF 91-36-35-1346/1348/1347/1349.

Rev.	Date	DESCRIPTION	by	app.
1	12.83	UP DATED	BYH	JLC

Contractor JVD_1029_40_02

elf aquitaine norge a/s
p.o.box 168
4001 Stavanger

elf
FRIGG FIELD

Job no.	Installation	System
	CDP 1	UNDERWATER

Scale /

GENERAL VIEW OF CONDUCTOR GUIDE FRAME CELL C LEVEL G

Dwgr. no FF_91.36.35.1332. 1 /

CDP 1 AS BUILT DRAWINGS

REFERENCE DRAWING LIST FOR: CONDUCTOR GUIDE FRAME

ORIGINATOR	CONSTRUCTION DRAWING REF.	TITLE	Rev	Sheet	Size
C.G DORIS	AO. MP. ØF 1044	WORKING DRAWING AND CUTTING OUT OF GUIDE FRAME Ø32"	1		AO
" "	A1. MP. ØF 1106	GENERAL LAYOUT OF THE GUIDE FRAME	1		A1
" "	A1 - MP ØF 1107	GENERAL LAYOUT OF THE BASE PLATES	1		A1
" "	A1. MP. ØF 1113	POSITION OF DRILLING HOLES	2		A1
" "	A1. MP. ØF 1127	FIXED LOCK FOR GUIDE FRAME Ø32" G C I	3		A1
" "	A1. MP. ØF 1128	FIXED LOCK FOR GUIDE FRAME Ø32" G C II	2		A1
" "	A1 MP ØF 1159	PIPE END OF GUIDE FRAME	1		A1
" "	A1 MP ØF 1190	PIPE END FOR FREE LOCK	3		A1
" "	A1 MP ØF 1245	BOX FOR FREE LOCK	1		A1

ELF DRAWING NUMBER	REVISION Index	REVISION Date	TITLE

Rev.	Date	DESCRIPTION	by	app.

Contractor

elf aquitaine norge a/s
p.o.box 168
4001 Stavanger

elf

FRIGG FIELD

Job no.	Installation	System
	CDP 1	UNDERWATER
Scale		
Dwgr. no. FF 1332	Rev	Sheet /

Form 100 318

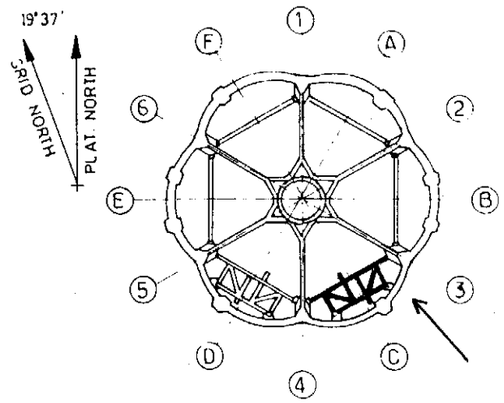

KEY PLAN

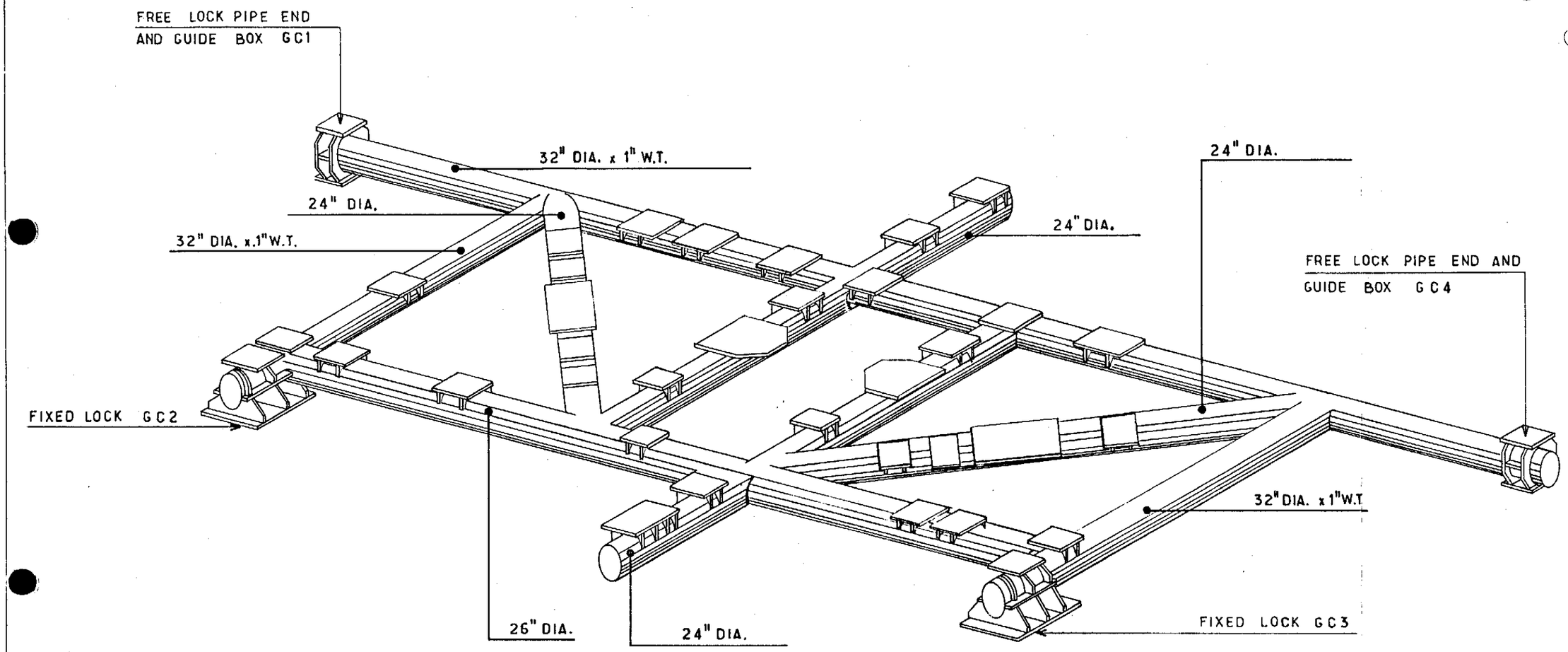

NOTES

1) SECONDARY FRAME DETAILS SEE SK FF 91-36-35-1334 TO FF. 91.36.35.1345
FOR FREE LOCK PIPE ENDS AND GUIDE BOXES SEE SK FF. 91.36.35.1346 / 1347 / 1348 / 1349

Rev.	Date	DESCRIPTION	by	app.
1	12.83	UP DATED	B.VH.	J.C

Contractor JVD 1029-40-03

elf aquitaine norge a/s
p.o.box 168
4001 Stavanger

elf
FRIGG FIELD

Job no.	Installation	System
	CDP 1	UNDERWATER
Scale —	GENERAL VIEW OF SECONDARY FRAME SUPPORT CELL C LEVEL G	
Dwgr. no FF 91-36-35-1333	1	

CDP 1 AS BUILT DRAWINGS

REFERENCE DRAWING LIST FOR:

ORIGINATOR	CONSTRUCTION DRAWING REF.	TITLE	Rev	Sheet	Size
CG. DORIS	A1.MP.QF.1107	GENERAL LAYOUT OF THE	1		A1
		BASE PLATES			
		LEVEL G CELL C			
" "	A1.MP.QF.1147	DETAIL OF BASE PLATE	1		A1
" "	A1.MP.QF.1148	" " " "	1		A1
" "	A1.MP.QF.1149	" " " "	1		A1
" "	A1.MP.QF.1154	" " " "	1		A1

ELF DRAWING NUMBER	REVISION Index	REVISION Date	TITLE

Rev.	Date	DESCRIPTION	by	app.

Contractor

elf aquitaine norge a/s
p.o.box 168
4001 Stavanger

elf
FRIGG FIELD

Job no.	Installation	System
	CDP 1	UNDERWATER
Scale		
Dwgr. no. FF 1333	Rev.	Sheet /

Form 100 318

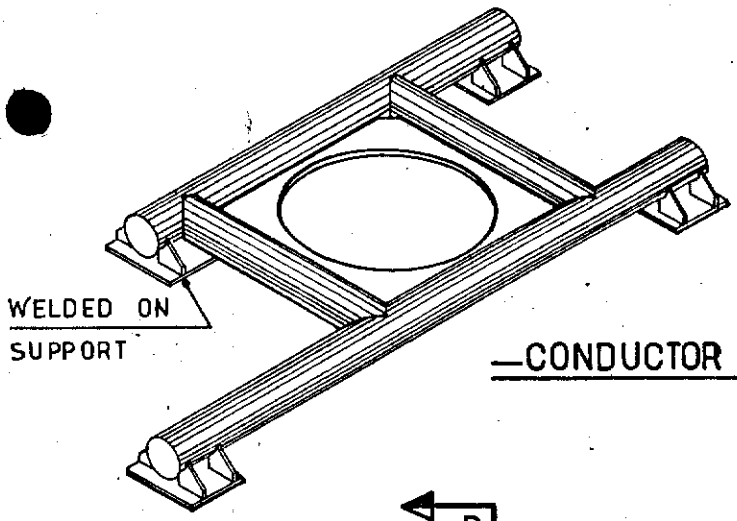

—CONDUCTOR GUIDE N°13—

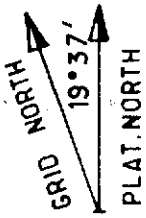

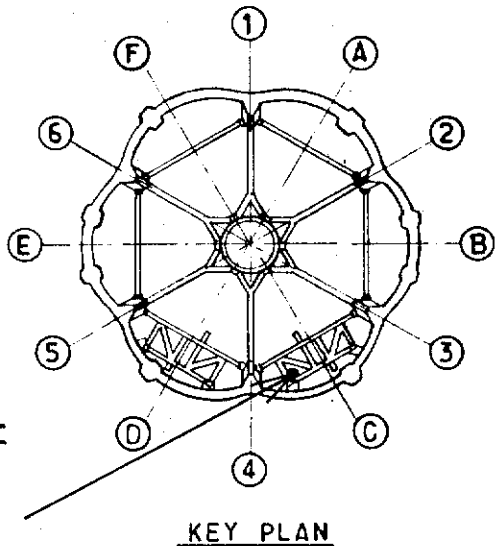

KEY PLAN

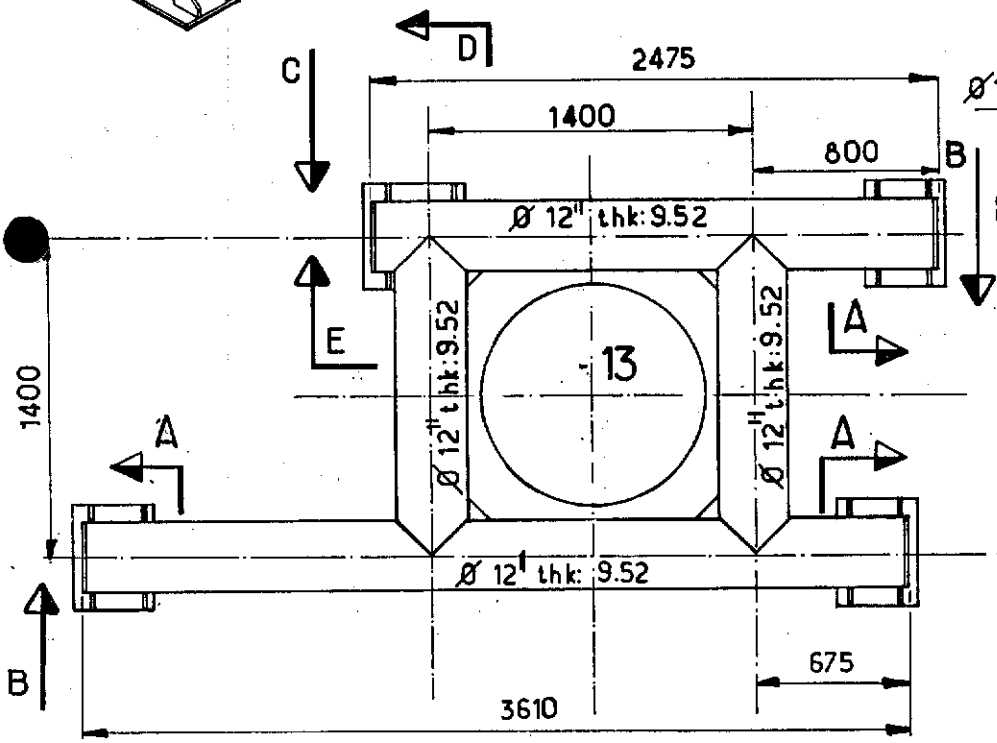

—PLAN VIEW—

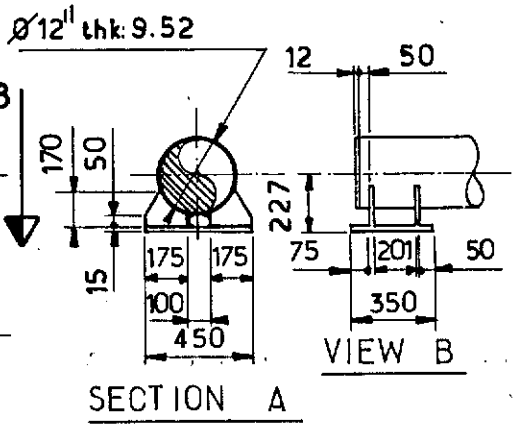

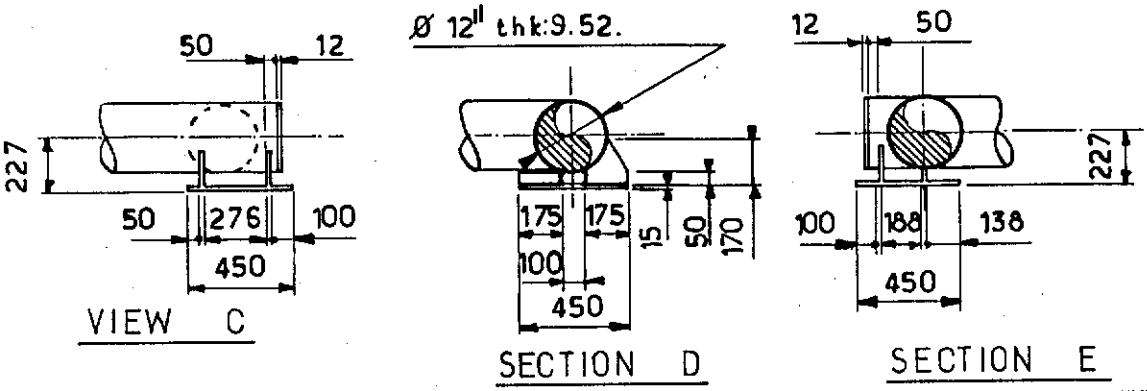

NOTES

FOR LOCATION SEE SK FF 91-36-35-1332.
FOR CONDUCTOR SLEEVE SEE SK FF-91-36-35-1491

Rev.	Date	DESCRIPTION	by	app.
1	12 83	UP DATED	BVH	J.C

Contractor JVD 1029_40_04

elf aquitaine norge a/s
p.o.box 168
4001 Stavanger

elf
FRIGG FIELD

Job no.	Installation	System
	CDP 1	UNDERWATER
Scale 1:33	CONDUCTOR GUIDE N°13 CELL C SECONDARY FRAME LEVEL G	
Dwgr. no. FF 91.36.35.1334.	Rev 1	Sheet /

Form 100 318

CDP 1 AS BUILT DRAWINGS

REFERENCE DRAWING LIST FOR:

ORIGINATOR	CONSTRUCTION DRAWING REF.	TITLE	Rev	Sheet	Size
C.G. DORIS	A1. MP. QF. 1072	SECONDARY FRAME FOR	1		A1.
		RULING OF THE CONDUCTOR			
		SELEEVE ZONE C.			

ELF DRAWING NUMBER	REVISION Index	REVISION Date	TITLE

Rev.	Date	DESCRIPTION	by	app.

Contractor

elf aquitaine norge a/s
p.o.box 168
4001 Stavanger

elf

FRIGG FIELD

Job no.	Installation	System
	CDP 1	UNDERWATER
Scale		
Dwgr. no. FF 1334	Rev.	Sheet 1

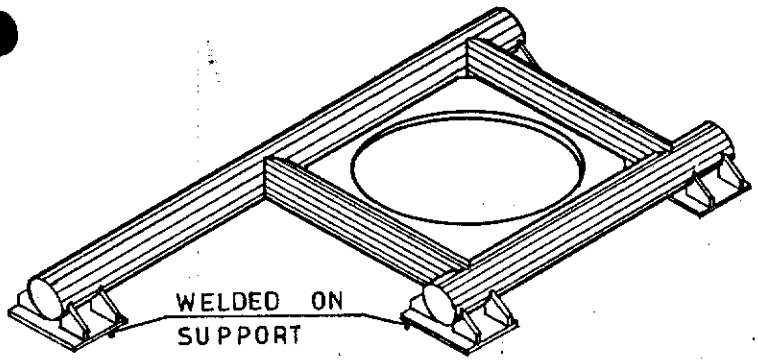

— CONDUCTOR GUIDE N°14 —

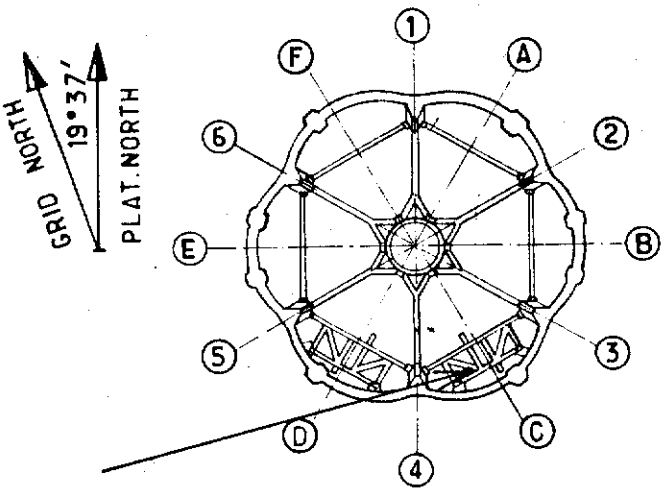

KEY PLAN

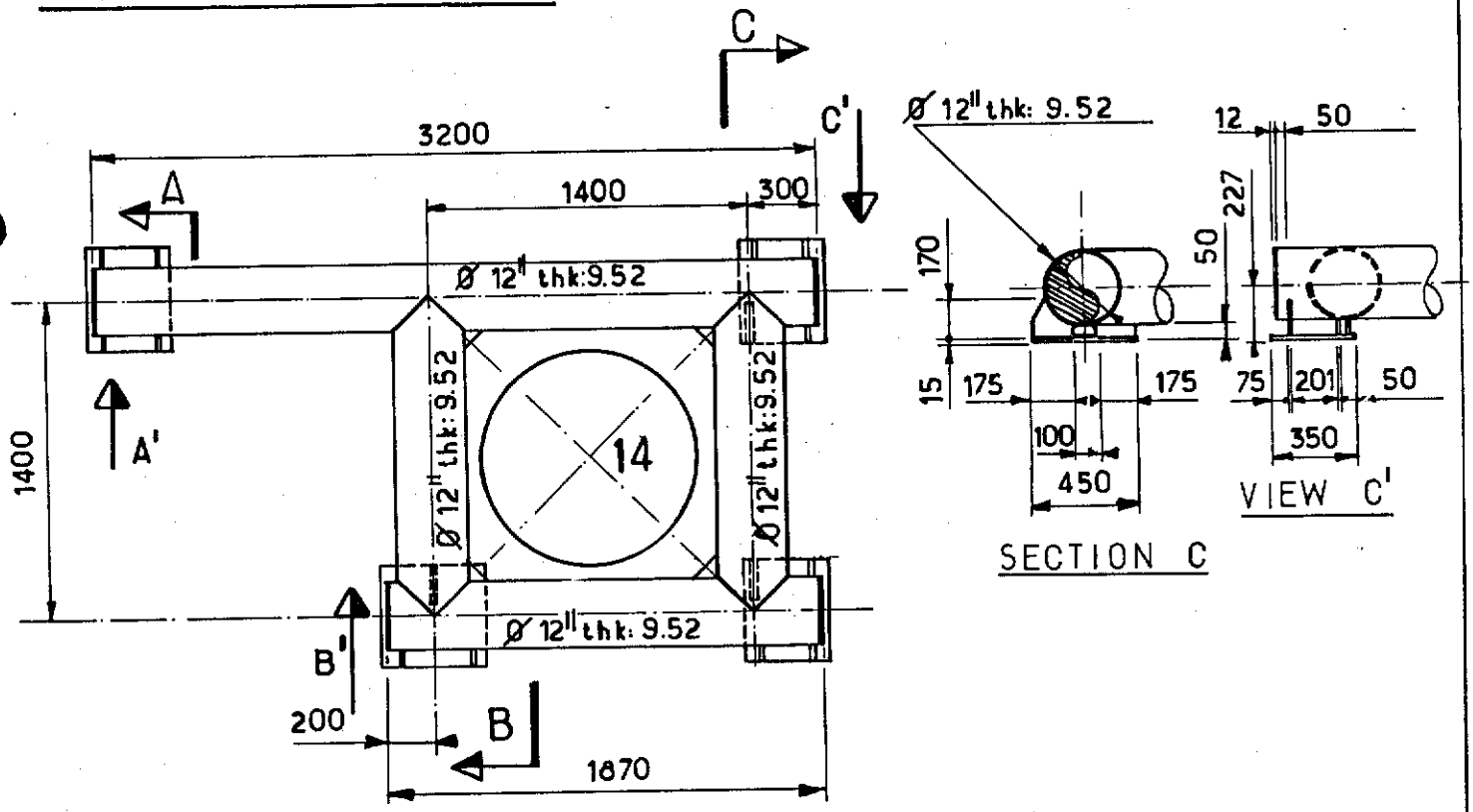

— PLAN VIEW —

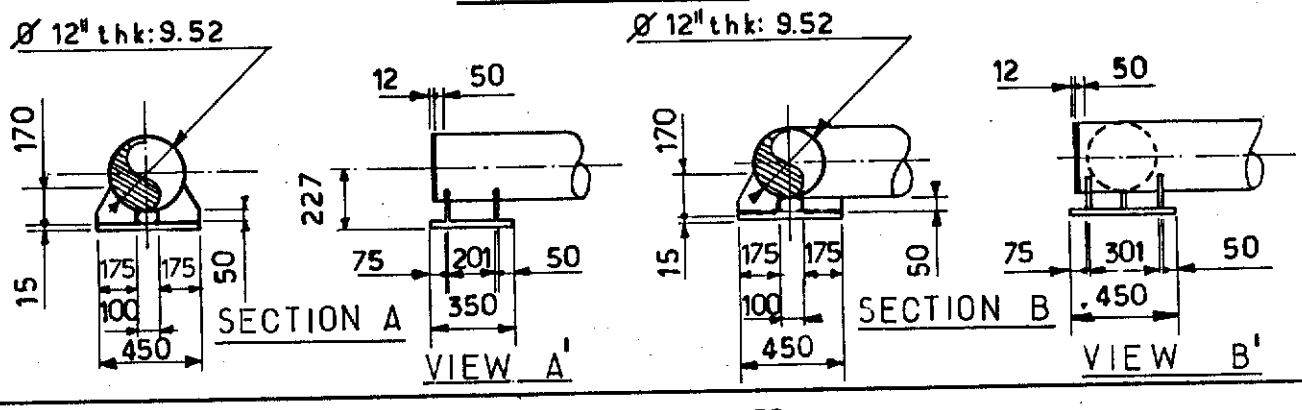

NOTES FOR LOCATION SEE SK FF. 91.36.35.1332.
FOR CONDUCTOR SLEEVE SK FF-91-36-35-1491.

Rev.	Date	DESCRIPTION	by	app.
1	12.83	UP DATED	BVH	J.LC

Contractor JVD 1029_40.05

elf aquitaine norge a/s
p.o.box 168
4001 Stavanger

elf
FRIGG FIELD

Job no.	Installation	System
	CDP 1	UNDERWATER
Scale 1:33	CONDUCTOR GUIDE N°14 CELL C SECONDARY FRAME LEVEL G	
Dwgr. no. FF-91-36.35-1335.	Rev. 1	Sheet

Form 100 318

CDP 1 AS BUILT DRAWINGS

REFERENCE DRAWING LIST FOR:

ORIGINATOR	CONSTRUCTION DRAWING REF.	TITLE	Rev	Sheet	Size
C.G. DORIS	A1. MP. QF. 1073	SECONDARY FRAME FOR	1		A1
		RULING OF THE CONDUCTOR			
		SELEEVE ZONE C.			

ELF DRAWING NUMBER	REVISION Index	REVISION Date	TITLE

Rev.	Date	DESCRIPTION	by	app.

Contractor

elf aquitaine norge a/s
p.o.box 168
4001 Stavanger

elf
FRIGG FIELD

Job no.	Installation	System
	CDP 1	UNDERWATER
Scale		
Dwgr. no. FF 1335		

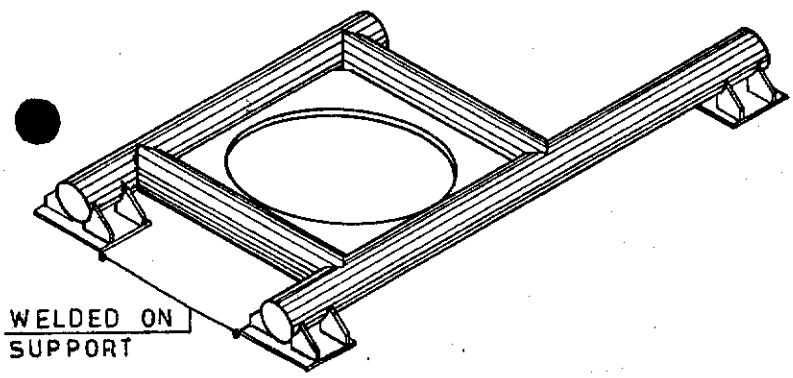

CONDUCTOR GUIDE N°15

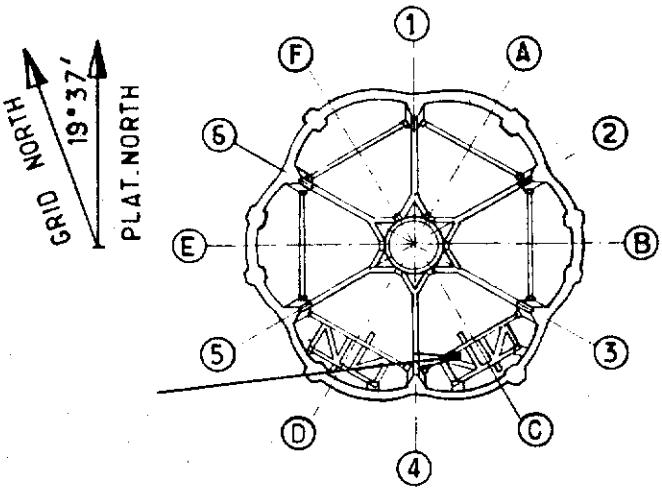

KEY PLAN

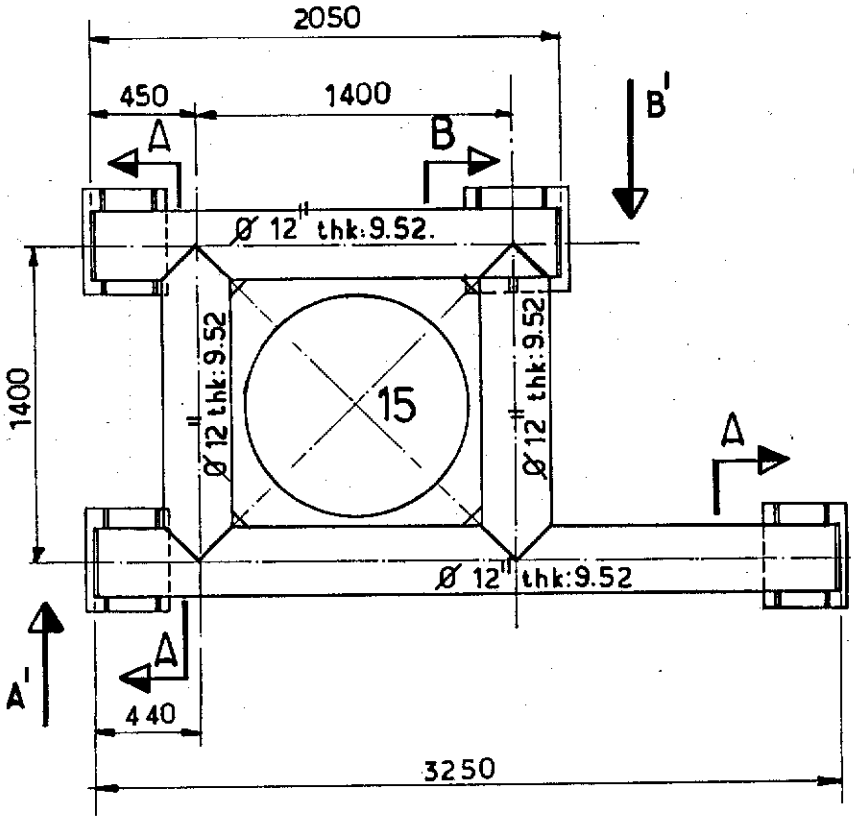

PLAN VIEW

SECTION A

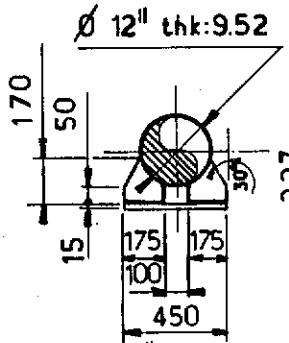

VIEW A'

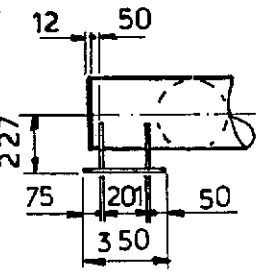

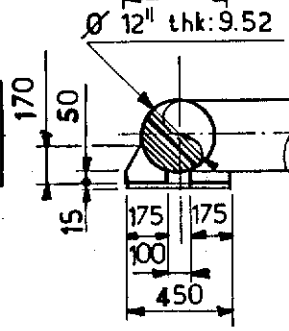

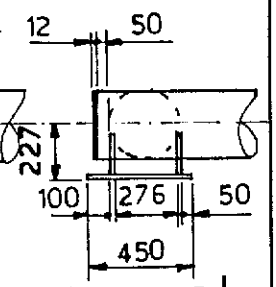

VIEW B'

SECTION B

NOTES

FOR LOCATION SEE SK FF 91.36.35.1332.
FOR CONDUCTOR SLEEVE SEE SK FF.91.36.35.1491

Rev.	Date	DESCRIPTION	by	app.
1	1283	UP DATED	B.V.H	J.LC

Contractor JVD 1029_40.06

elf aquitaine norge a/s
p.o.box 168
4001 Stavanger

elf
FRIGG FIELD

Job no.	Installation	System
	CDP 1	UNDERWATER
Scale 1:33	CONDUCTOR GUIDE N°15 CELL C SECONDARY FRAME LEVEL G	
Dwgr. no. FF 91.36.35.1336.	Rev 1	Sheet /

Form 100 318

CDP 1 AS BUILT DRAWINGS

REFERENCE DRAWING LIST FOR:

ORIGINATOR	CONSTRUCTION DRAWING REF.	TITLE	Rev	Sheet	Size
C.G. DORIS	A1. MP. QF. 1077	SECONDARY FRAME FOR	1		A1
		RULING OF THE CONDUCTOR			
		SELEEVE ZONE C.			

ELF DRAWING NUMBER	REVISION Index	REVISION Date	TITLE

Rev.	Date	DESCRIPTION	by	app.

Contractor

elf aquitaine norge a/s
p.o.box 168
4001 Stavanger

elf
FRIGG FIELD

Job no.	Installation	System
	CDP 1	UNDERWATER
Scale		
Dwgr. no. FF 1336		

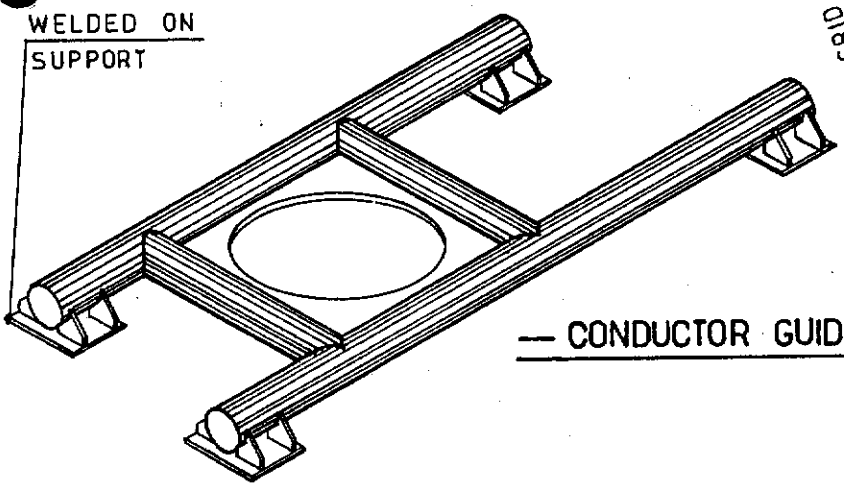

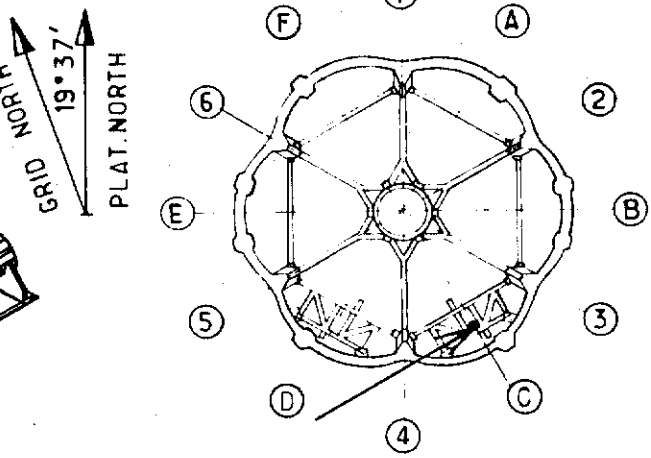

KEY PLAN

— CONDUCTOR GUIDE N°16 —

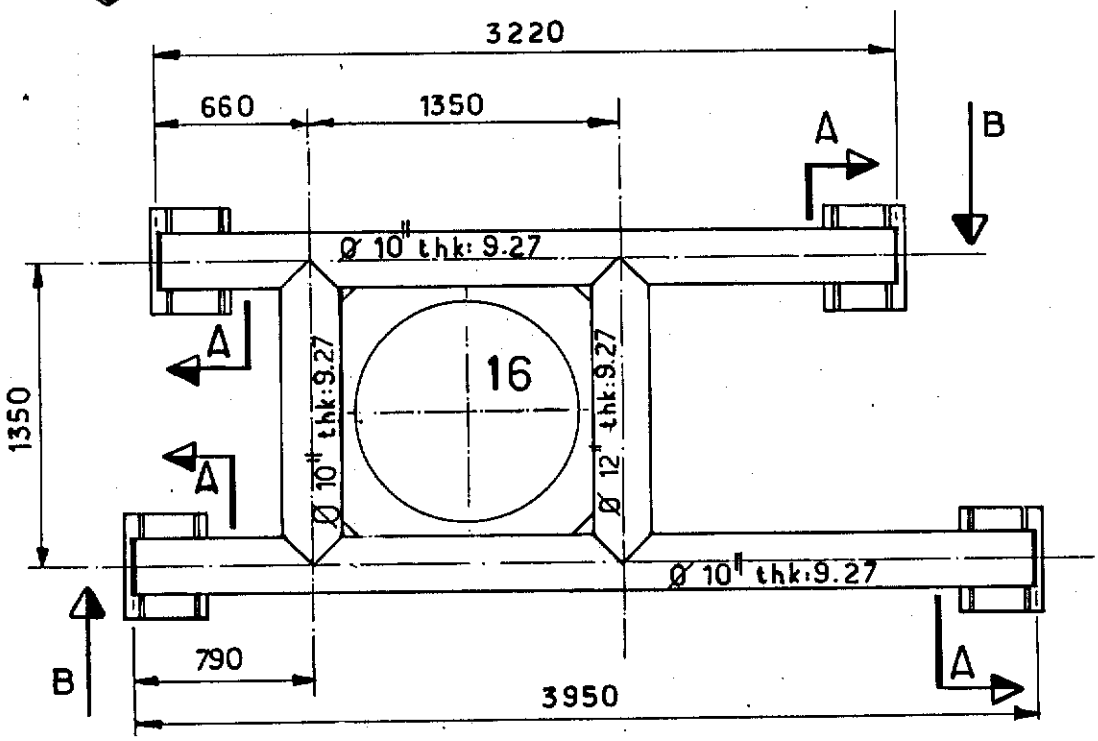

—PLAN VIEW—

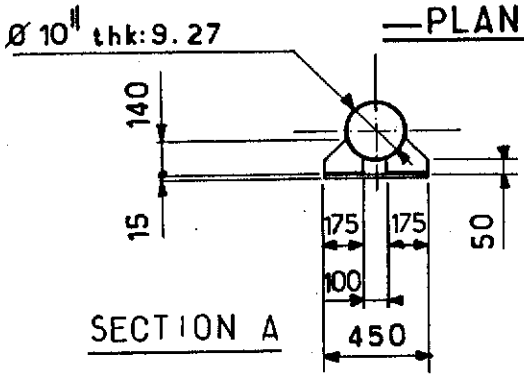

SECTION A

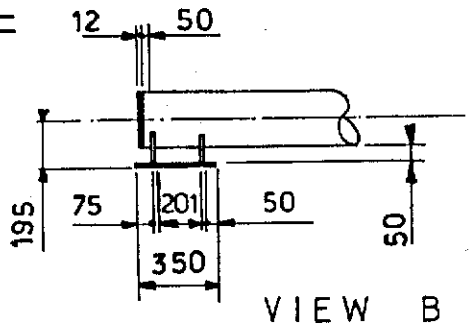

VIEW B

NOTES

FOR LOCATION SEE SK FF 91.36.35.1332.
FOR CONDUCTOR SLEEVE SEE SK FF.91.36.35.1491.

Rev.	Date	DESCRIPTION	by	app.
1	12.83	UP DATED	B.VH	J.LC

Contractor JVD 1029_4007

elf aquitaine norge a/s
p.o.box 168
4001 Stavanger

elf
FRIGG FIELD

Job no.	Installation	System
	CDP 1	UNDERWATER
Scale: 1:33	CONDUCTOR GUIDE N°16 CELL C SECONDARY FRAME LEVEL 6	
Dwgr. no. FF 91_36_35_1337.	Rev. 1	Sheet /

CDP 1 AS BUILT DRAWINGS

REFERENCE DRAWING LIST FOR:

ORIGINATOR	CONSTRUCTION DRAWING REF.	TITLE	Rev	Sheet	Size
C.G. DORIS	A1. MP. QF. 1076	SECONDARY FRAME FOR	2		A1
		RULING OF THE CONDUCTOR			
		SELEEVE ZONE C.			

ELF DRAWING NUMBER	REVISION Index	REVISION Date	TITLE

Rev.	Date	DESCRIPTION	by	app.

Contractor

elf aquitaine norge a/s
p.o.box 168
4001 Stavanger

elf
FRIGG FIELD

Job no.	Installation	System
	CDP 1	UNDERWATER
Scale		
Dwgr. no. FF 1337		

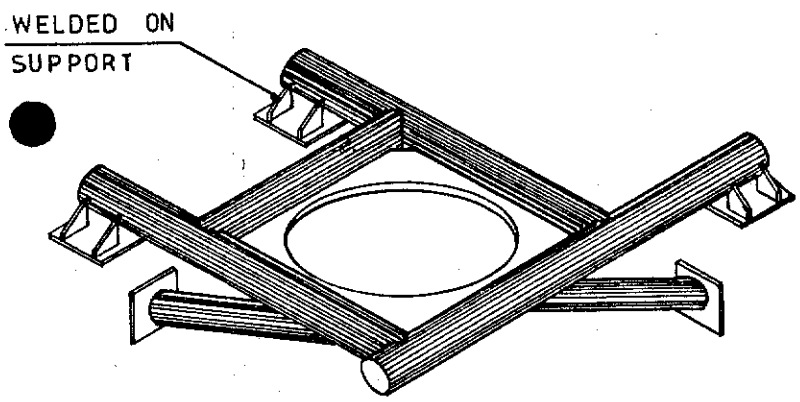

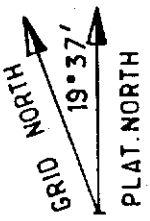

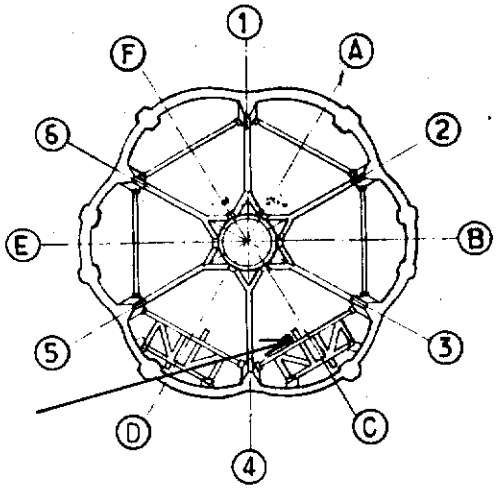

CONDUCTOR GUIDE N°17

KEY PLAN

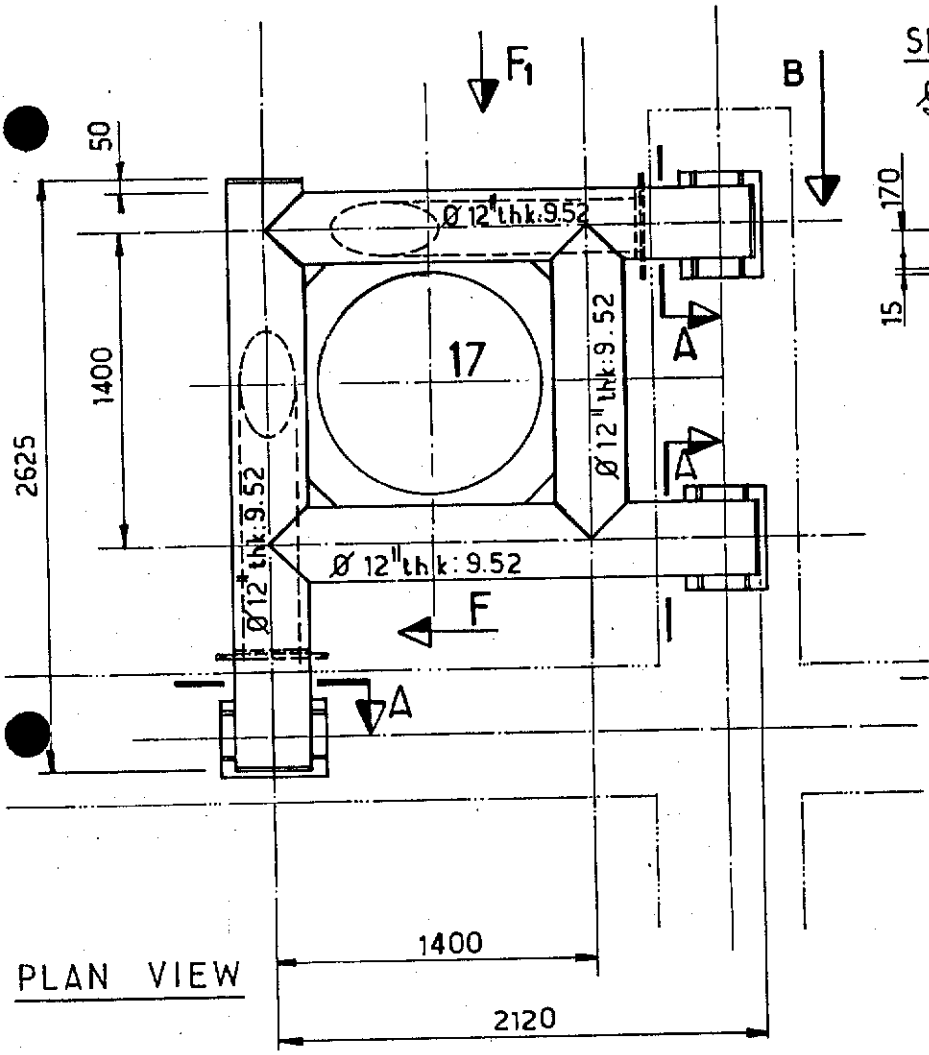

PLAN VIEW

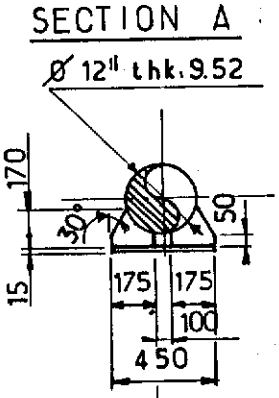

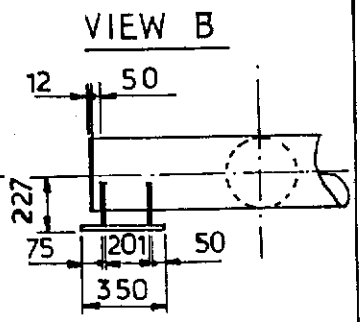

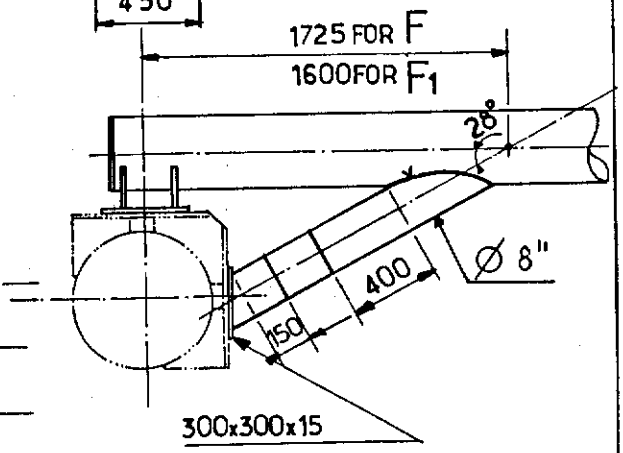

VIEW F AND F1

NOTES

FOR LOCATION SEE SK FF.91.36.35.1332
FOR CONDUCTOR SLEEVE SEE SK FF 91.36.35.1491

Rev.	Date	DESCRIPTION	by	app.
1	12.83	UP DATED	BVH	J.LC

Contractor JVD 1029_40_08

elf aquitaine norge a/s
p.o.box 168
4001 Stavanger

elf
FRIGG FIELD

Job no.	Installation	System
	CDP 1	UNDERWATER
Scale 1:33	CONDUCTOR GUIDE N°17 CELL C SECONDARY FRAME LEVEL G	
Dwgr. no. FF 91_36_35_1338.	Rev 1	Sheet /

Form 100 318

CDP 1 AS BUILT DRAWINGS

REFERENCE DRAWING LIST FOR:

ORIGINATOR	CONSTRUCTION DRAWING REF.	TITLE	Rev	Sheet	Size
C.G. DORIS	A1. MP. QF. 1070	SECONDARY FRAME FOR RULING OF THE CONDUCTOR SELEEVE ZONE C.	1		A1.

ELF DRAWING NUMBER	REVISION Index	REVISION Date	TITLE

Rev.	Date	DESCRIPTION	by	app.

Contractor

elf aquitaine norge a/s
p.o.box 168
4001 Stavanger

elf
FRIGG FIELD

Job no.	Installation	System
	CDP 1	UNDERWATER
Scale		
Dwgr. no. FF 1338		

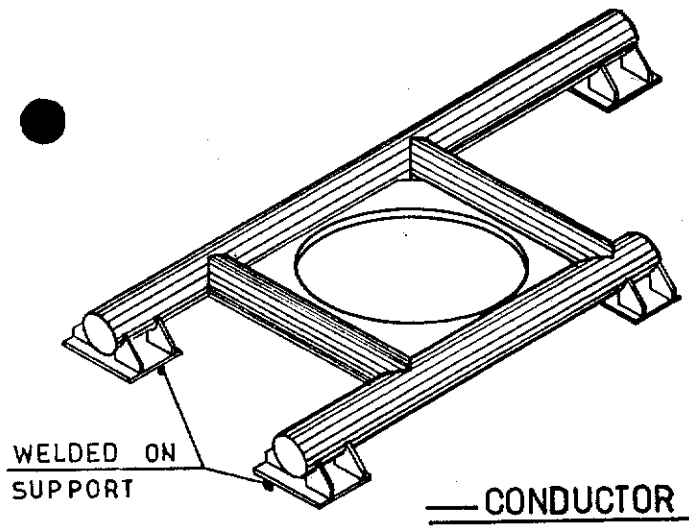

CONDUCTOR GUIDE N°18

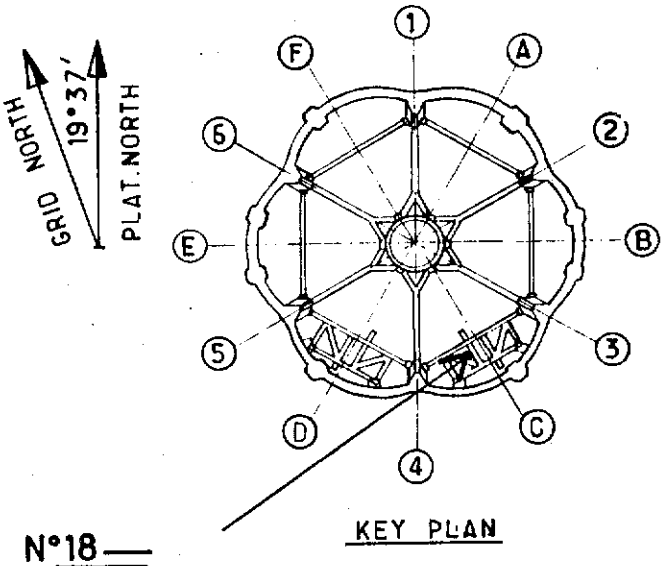

KEY PLAN

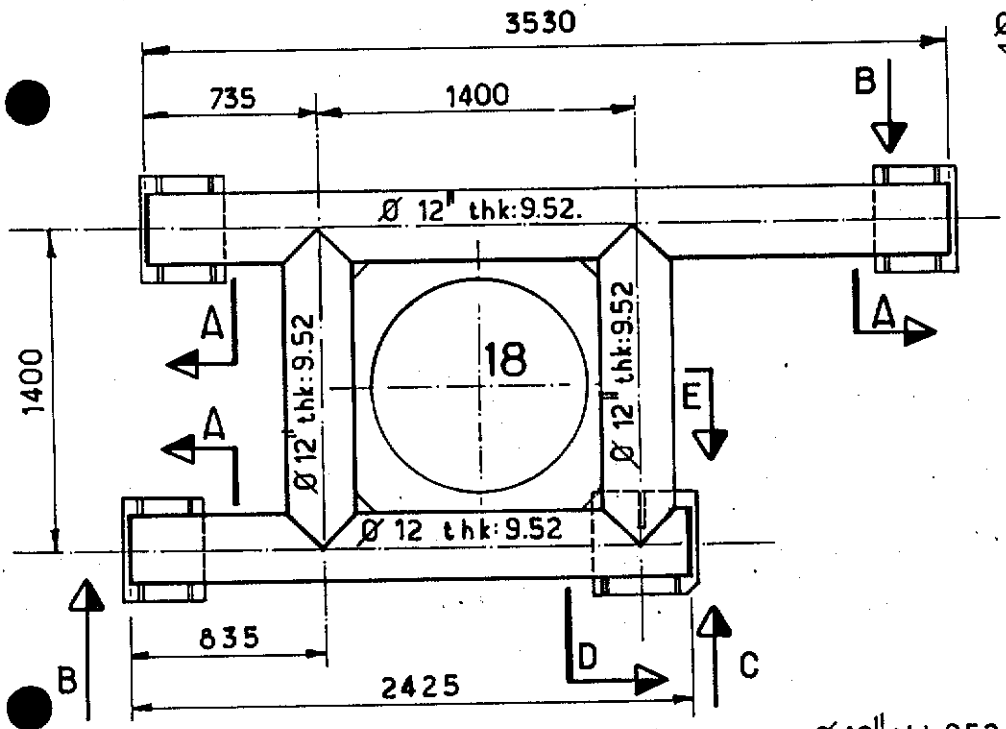

PLAN VIEW

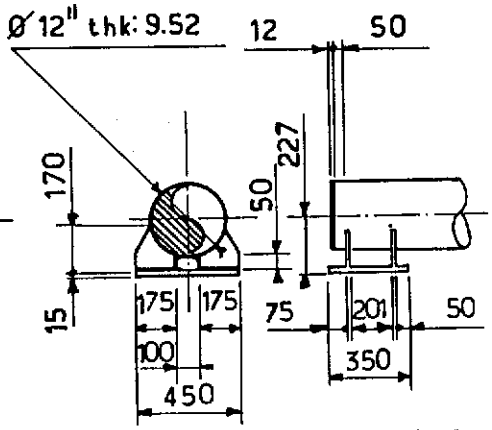

SECTION A VIEW B

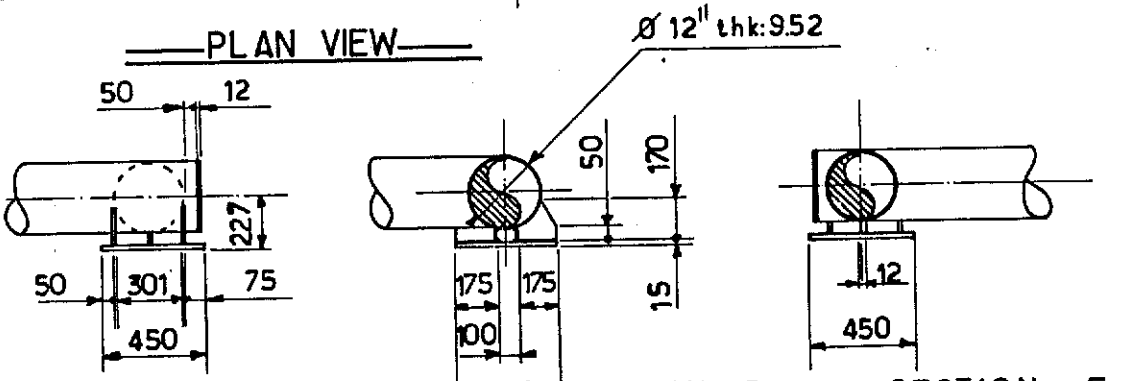

VIEW C SECTION D SECTION E

NOTES

FOR LOCATION SEE SK FF 91.36.35.1332.
FOR CONDUCTOR SLEEVE SEE SK FF 91.36.35.1491

Rev.	Date	DESCRIPTION	by	app.
1	12.83	UP DATED	BVH	J.LC

Contractor JVD 1029_40.09

elf aquitaine norge a/s
p.o.box 168
4001 Stavanger

elf
FRIGG FIELD

Job no.	Installation	System
	CDP 1	UNDERWATER
Scale 1:33	CONDUCTOR GUIDE N°18 CELL C SECONDARY FRAME LEVEL G	
Dwgr. no. FF 91.36.35.1339	Rev. 1	Sheet /

Form 100 318

CDP 1 AS BUILT DRAWINGS

REFERENCE DRAWING LIST FOR:

ORIGINATOR	CONSTRUCTION DRAWING REF.	TITLE	Rev	Sheet	Siz
G. DORIS	A1. MP. QF. 1074	SECONDARY FRAME FOR RULING OF THE CONDUCTOR SELEEVE ZONE C.	1		A1

ELF DRAWING NUMBER	REVISION Index	REVISION Date	TITLE

Date	DESCRIPTION	by	app.

Contractor

elf aquitaine norge a/s
p.o.box 168
4001 Stavanger

elf
FRIGG FIELD

Job no.	Installation CDP 1	System UNDERWATER
Scale		
Dwgr. no. FF 1339		

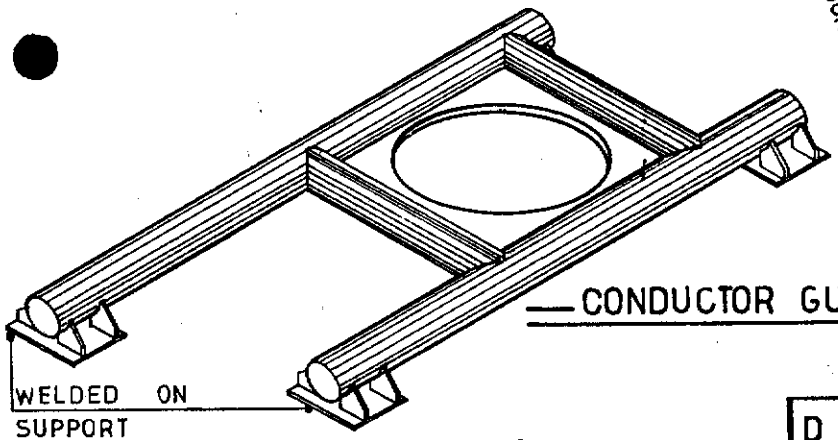

CONDUCTOR GUIDE N°19

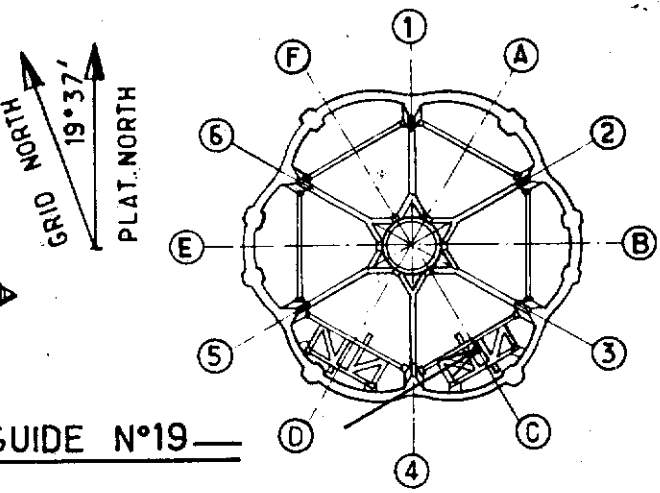

KEY PLAN

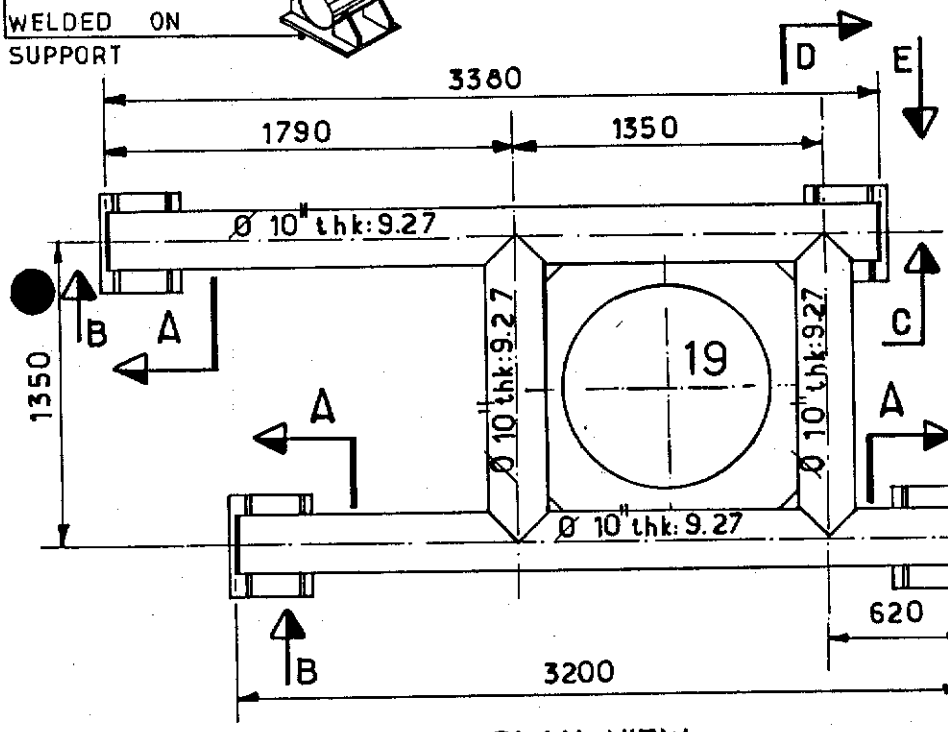

PLAN VIEW

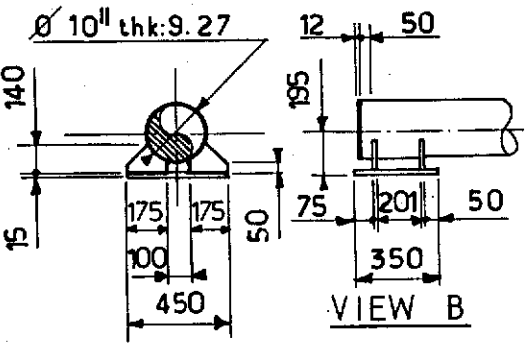

SECTION A

VIEW B

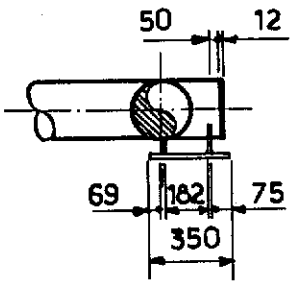

SECTION C

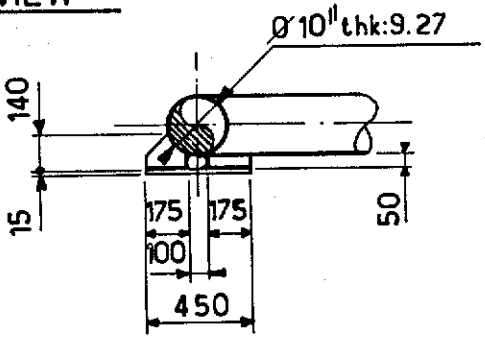

SECTION D

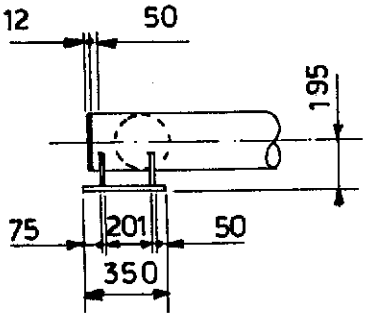

VIEW E

NOTES

FOR LOCATION SEE SK FF 91_36_35_1332.

FOR CONDUCTOR SLEEVE SEE SK FF_91_36_35_1491.

Rev.	Date	DESCRIPTION	by	app.
1	12.83	UP DATED	B.VH	J.L.C

Contractor JVD 1029_40.10

elf aquitaine norge a/s
p.o.box 168
4001 Stavanger

elf
FRIGG FIELD

Job no.	Installation	System
	CDP 1	UNDERWATER
Scale 1:33	CONDUCTOR GUIDE N°19 CELL C SECONDARY FRAME LEVEL G	
Dwgr. no. FF 91_36_35_1340	Rev. 1	Sheet /

Form 100 318

CDP 1 AS BUILT DRAWINGS

REFERENCE DRAWING LIST FOR:

ORIGINATOR	CONSTRUCTION DRAWING REF.	TITLE	Rev	Sheet	Size
C.G. DORIS	A1. MP. QF. 1075	SECONDARY FRAME FOR	2		A1.
		RULING OF THE CONDUCTOR			
		SELEEVE ZONE C.			

ELF DRAWING NUMBER	REVISION Index	REVISION Date	TITLE

Rev.	Date	DESCRIPTION	by	app.

Contractor

elf aquitaine norge a/s
p.o.box 168
4001 Stavanger

elf

FRIGG FIELD

Job no.	Installation	System
	CDP 1	UNDERWATER
Scale		
Dwgr. no. FF 1340		

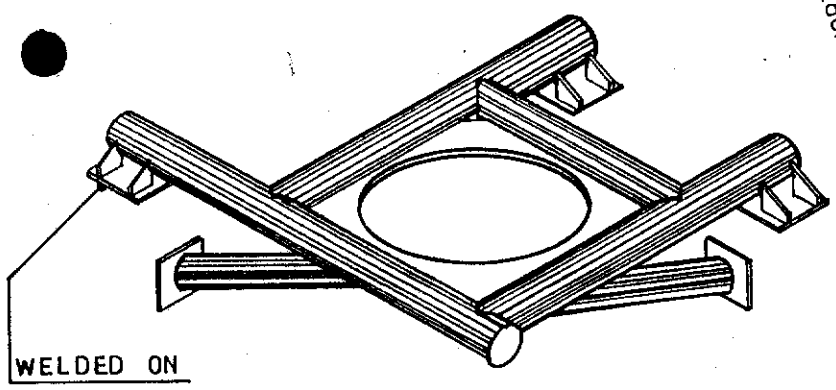

CONDUCTOR GUIDE N°20

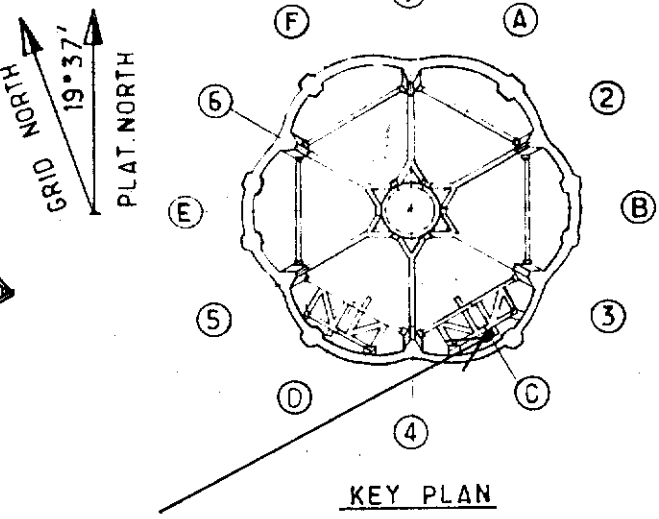

KEY PLAN

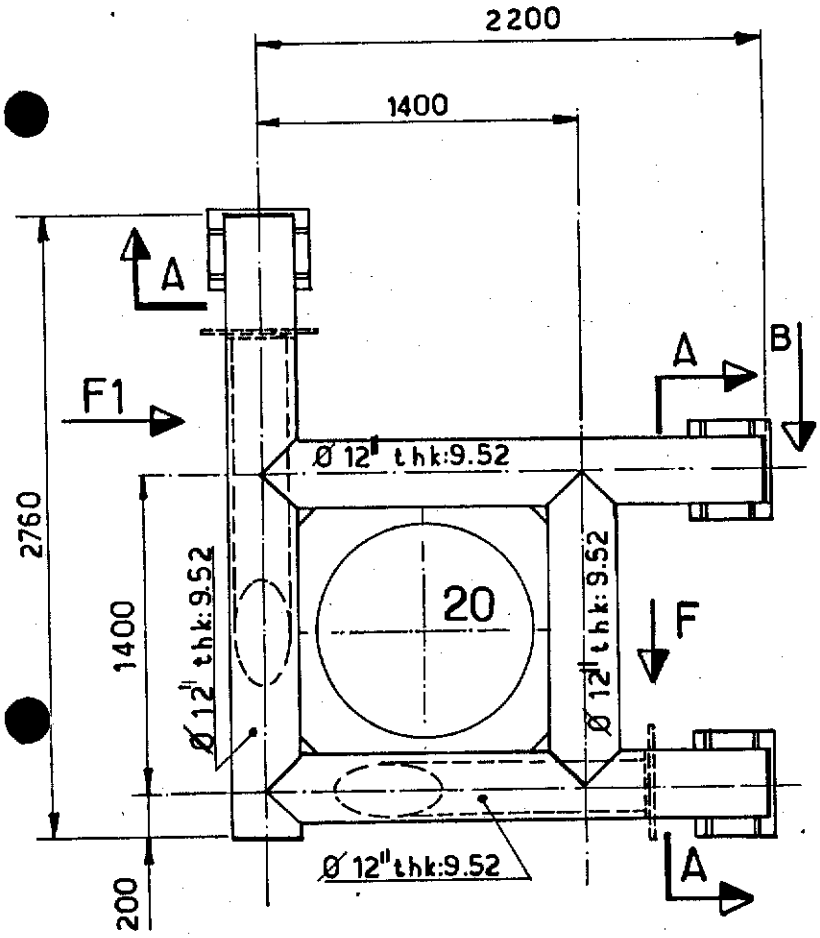

PLAN VIEW

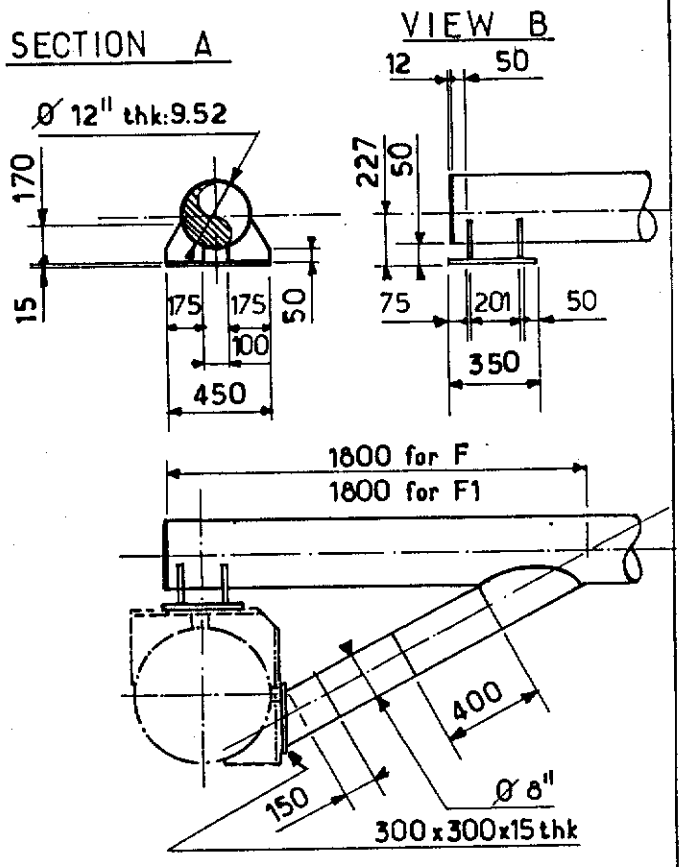

VIEW F AND F1

NOTES

FOR LOCATION SEE SK FF 91-36-35-1332
FOR CONDUCTOR SLEEVE SEE SK FF-91-36-35-1491.

Rev.	Date	DESCRIPTION	by	app.
1	12.83	UP DATED	B.V.H	I.LC

Contractor JVD 1029-40.11

elf aquitaine norge a/s
p.o.box 168
4001 Stavanger

elf
FRIGG FIELD

Job no.	Installation	System
	CDP 1	UNDERWATER

Scale 1:33

CONDUCTOR GUIDE N° 20 CELL C
SECONDARY FRAME LEVEL G

Dwgr. no. FF 91-36-35-1341. Rev. 1 Sheet /

CDP 1 AS BUILT DRAWINGS

REFERENCE DRAWING LIST FOR:

ORIGINATOR	CONSTRUCTION DRAWING REF.	TITLE	Rev	Sheet	Size
C.G. DORIS	A1. MP. QF. 1077	SECONDARY FRAME FOR	1		A1.
		RULING OF THE CONDUCTOR			
		SELEEVE ZONE C.			

ELF DRAWING NUMBER	REVISION Index	REVISION Date	TITLE

Rev.	Date	DESCRIPTION	by	app.

Contractor

elf aquitaine norge a/s
p.o.box 168
4001 Stavanger

elf

FRIGG FIELD

Job no.	Installation	System
	CDP 1	UNDERWATER
Scale		
Dwgr. no. FF 1341		

CONDUCTOR GUIDE N°21

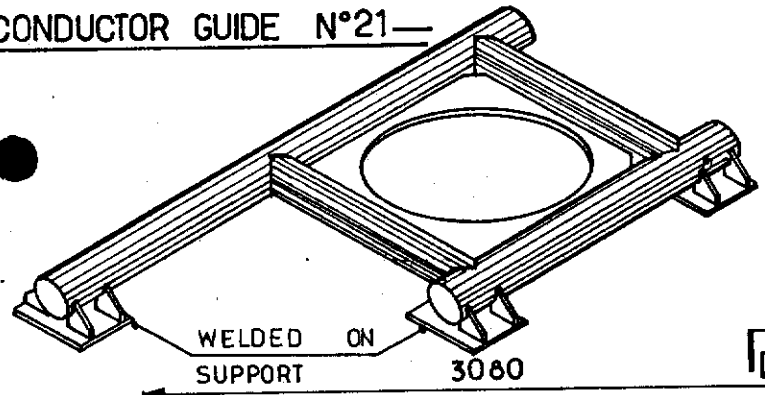

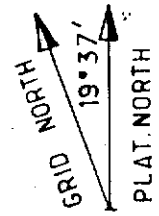

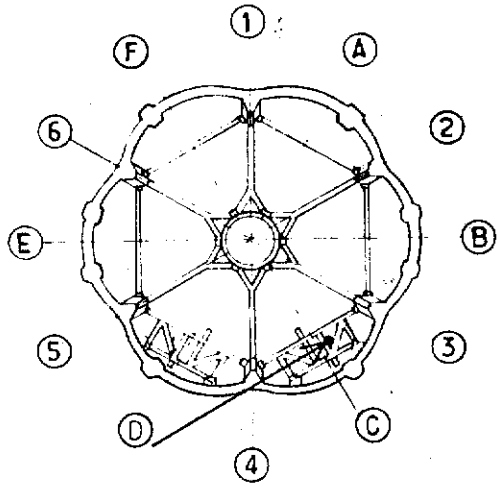

KEY PLAN

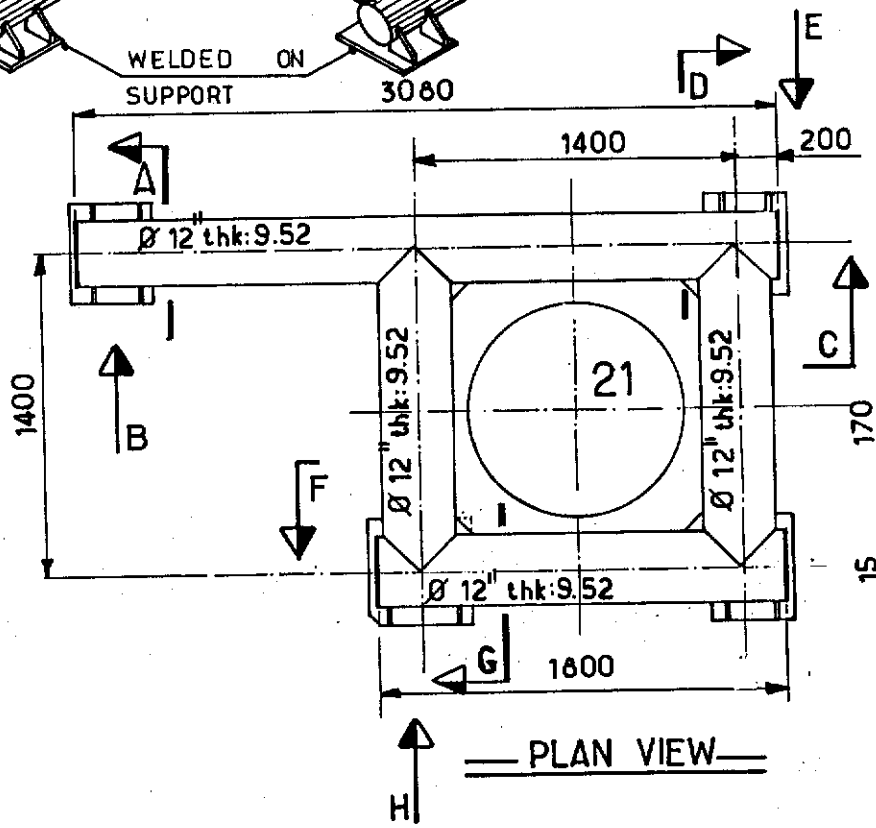

PLAN VIEW

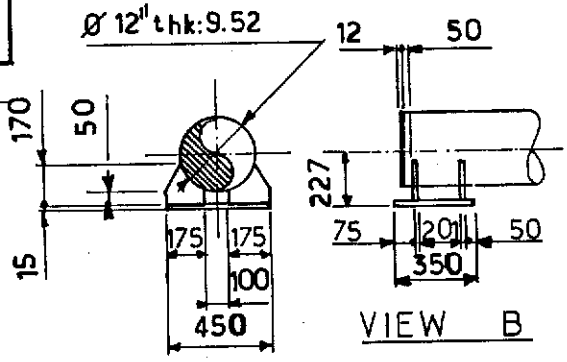

SECTION A

VIEW B

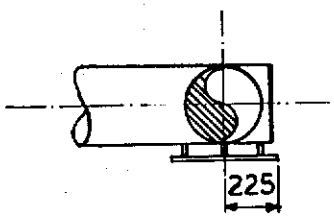

SECTION C

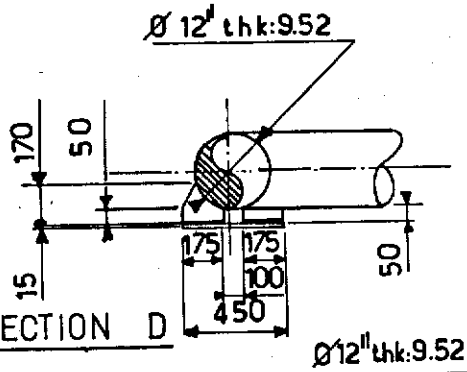

SECTION D

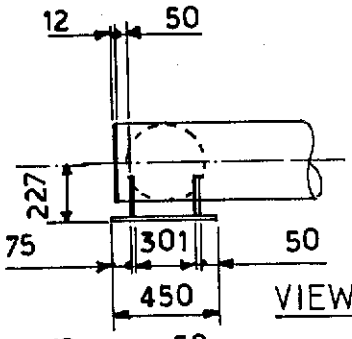

VIEW E

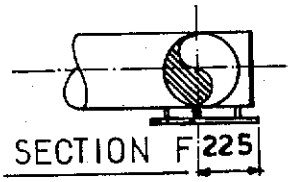

SECTION F

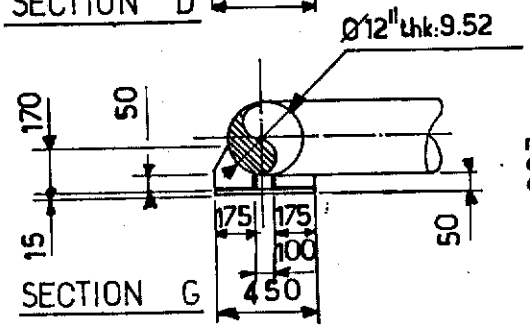

SECTION G

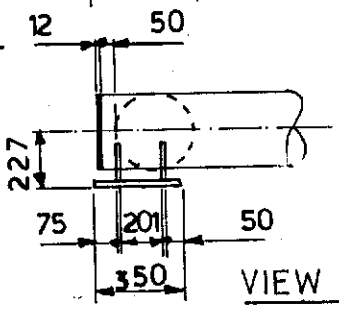

VIEW H

NOTES FOR LOCATION SEE SK FF.91.36.35.1332.
FOR CONDUCTOR SLEEVE SEE SK FF.91.36.35.1491.

Rev.	Date	DESCRIPTION	by	app.
1	12.83	UP DATED	BVH	JLC

Contractor JVD 1029-40.12.

elf aquitaine norge a/s
p.o.box 168
4001 Stavanger

elf
FRIGG FIELD

Job no.	Installation	System
	CDP 1	UNDERWATER
Scale 1:33	CONDUCTOR GUIDE N°21 CELL C SECONDARY FRAME LEVEL G	
Dwgr. no. FF 91.36.35.1342.	Rev. 1	Sheet /

CDP 1 AS BUILT DRAWINGS

REFERENCE DRAWING LIST FOR:

ORIGINATOR	CONSTRUCTION DRAWING REF.	TITLE	Rev	Sheet	Size
C.G. DORIS	A1. MP. QF. 1079	SECONDARY FRAME FOR	1		A1.
		RULING OF THE CONDUCTOR			
		SELEEVE ZONE C.			

ELF DRAWING NUMBER	REVISION Index	REVISION Date	TITLE

Rev.	Date	DESCRIPTION	by	app.

Contractor

elf aquitaine norge a/s
p.o.box 168
4001 Stavanger

elf
FRIGG FIELD

Job no.	Installation	System
	CDP 1	UNDERWATER
Scale		
Dwgr. no. FF 1342	Rev.	Sheet /

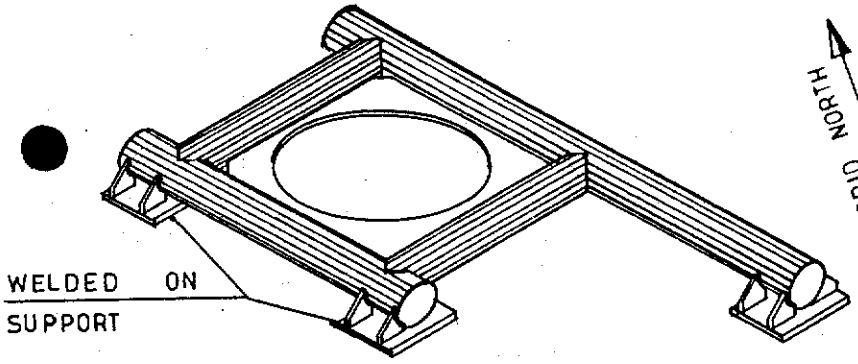

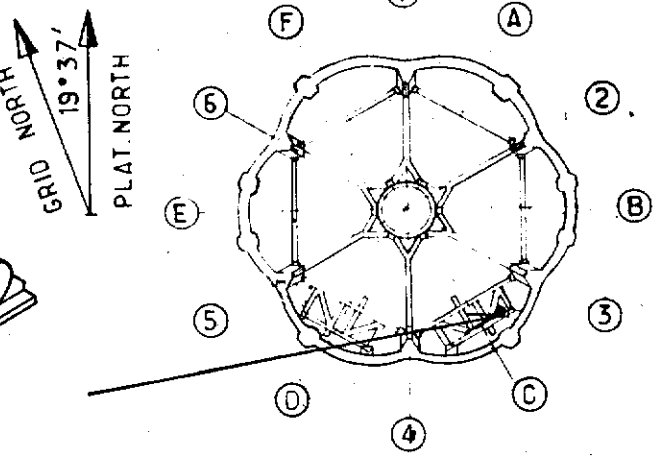

KEY PLAN

CONDUCTOR GUIDE N°22

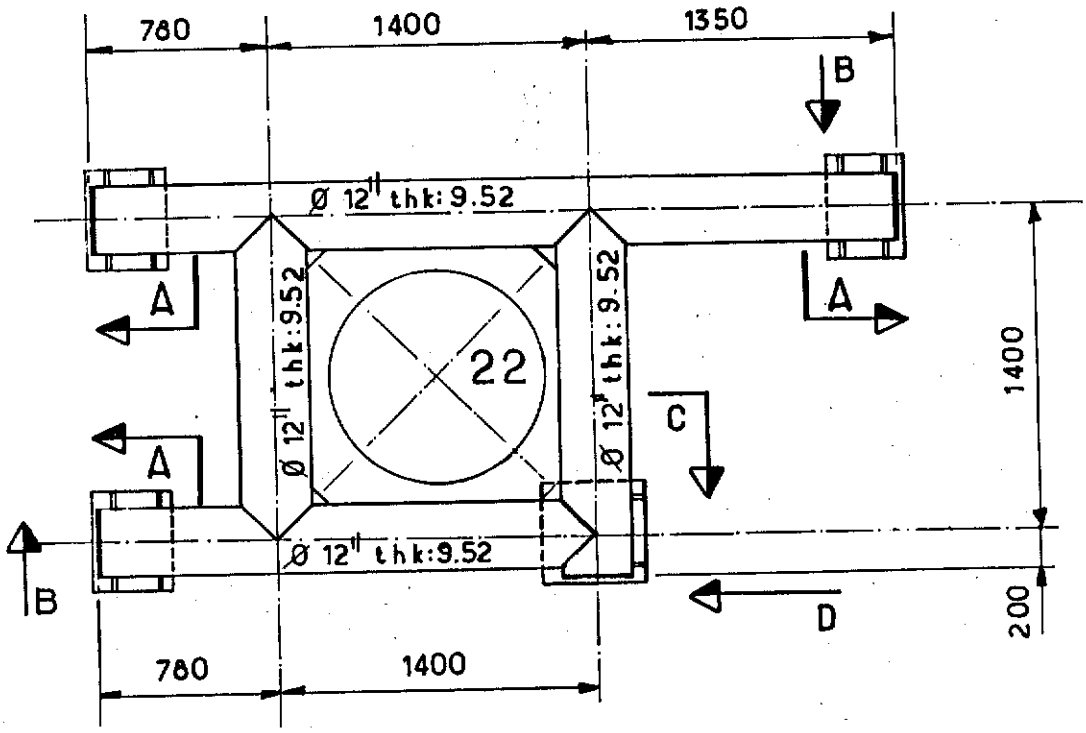

PLAN VIEW

SECTION C

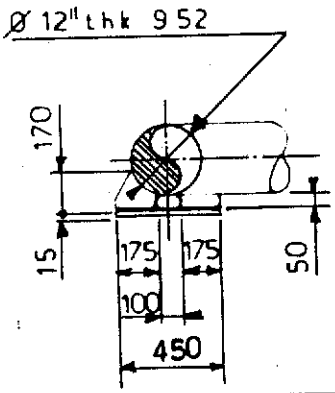

VIEW D

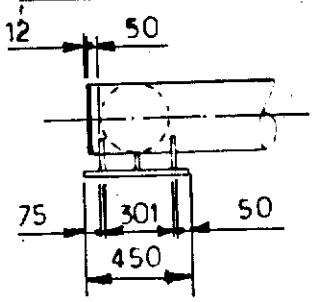

SECTION A

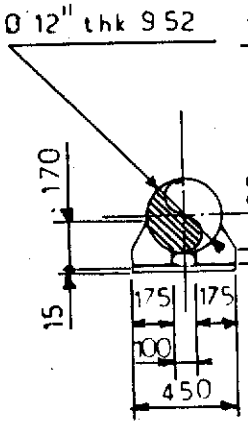

VIEW B

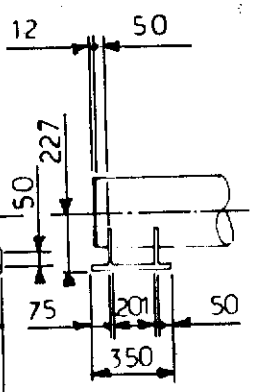

NOTES

FOR LOCATION SEE SK FF 91-36-35-1332.
FOR CONDUCTOR SLEEVE SEE SK FF_91_36_35_1491.

Rev.	Date	DESCRIPTION	by	app.
1	12.83	UP DATED	BVH	J.L.C

Contractor JVD 1029_40.13

elf aquitaine norge a/s
p.o.box 168
4001 Stavanger

elf
FRIGG FIELD

Job no.	Installation	System
	CDP 1	UNDERWATER
Scale 1:33	CONDUCTOR GUIDE N°22 CELL C SECONDARY FRAME LEVEL G	
Dwgr. no. FF 91_36_35_1343.	Rev. 1	Sheet /

CDP 1 AS BUILT DRAWINGS

REFERENCE DRAWING LIST FOR:

ORIGINATOR	CONSTRUCTION DRAWING REF.	TITLE	Rev	Sheet	Size
C.G. DORIS	A1. MP. QF. 1080	SECONDARY FRAME FOR RULING OF THE CONDUCTOR SELEEVE ZONE C.	1		A1.

ELF DRAWING NUMBER	REVISION Index	REVISION Date	TITLE

Rev.	Date	DESCRIPTION	by	app.

Contractor

elf aquitaine norge a/s
p.o.box 168
4001 Stavanger

elf

FRIGG FIELD

Job no.	Installation	System
	CDP 1	UNDERWATER
Scale		
Dwgr. no. FF 1343		

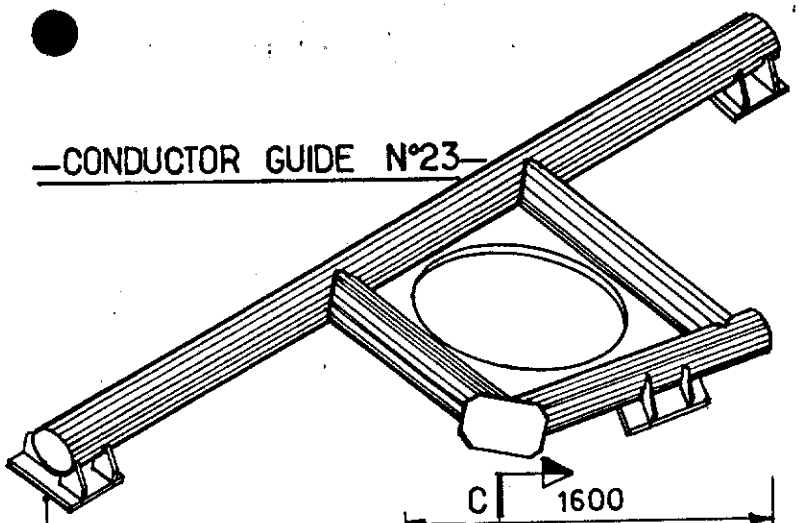

CONDUCTOR GUIDE N°23

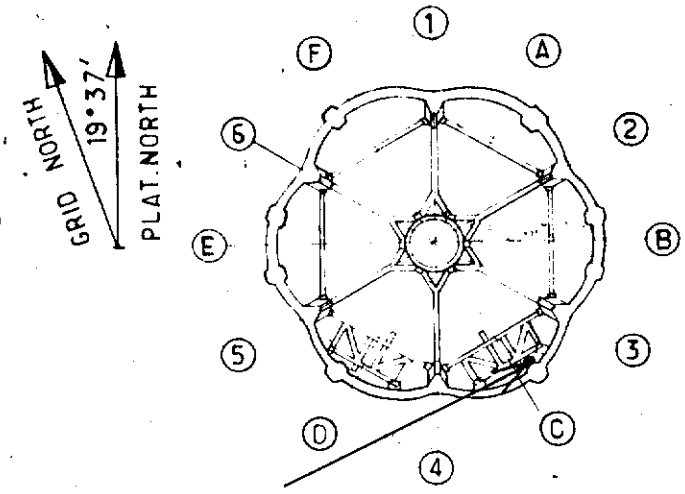

KEY PLAN

NOTES
FOR LOCATION SEE SK FF.91.36.35.1332
FOR CONDUCTOR SLEEVE SEE SK FF.91.36.35.1491

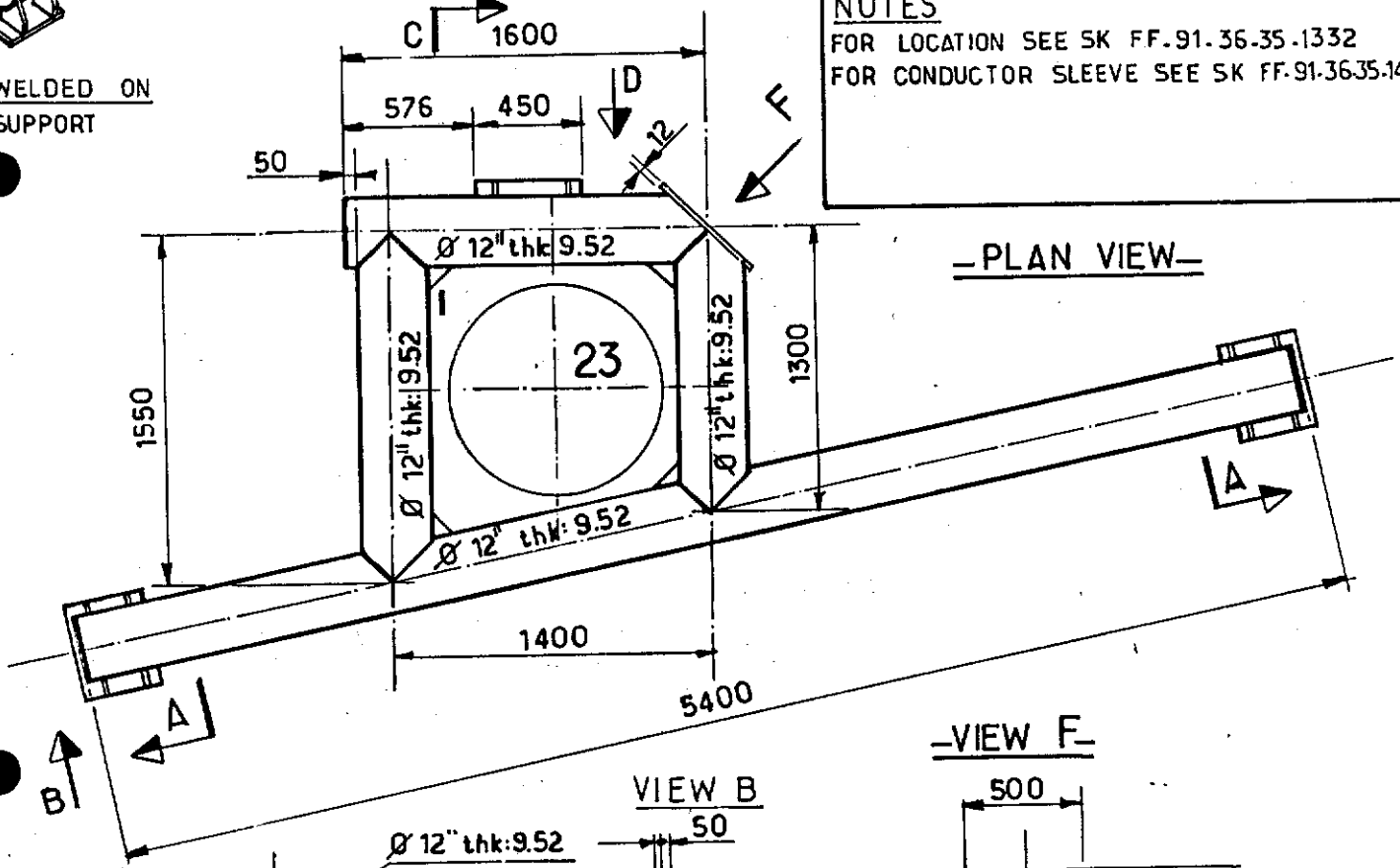

PLAN VIEW

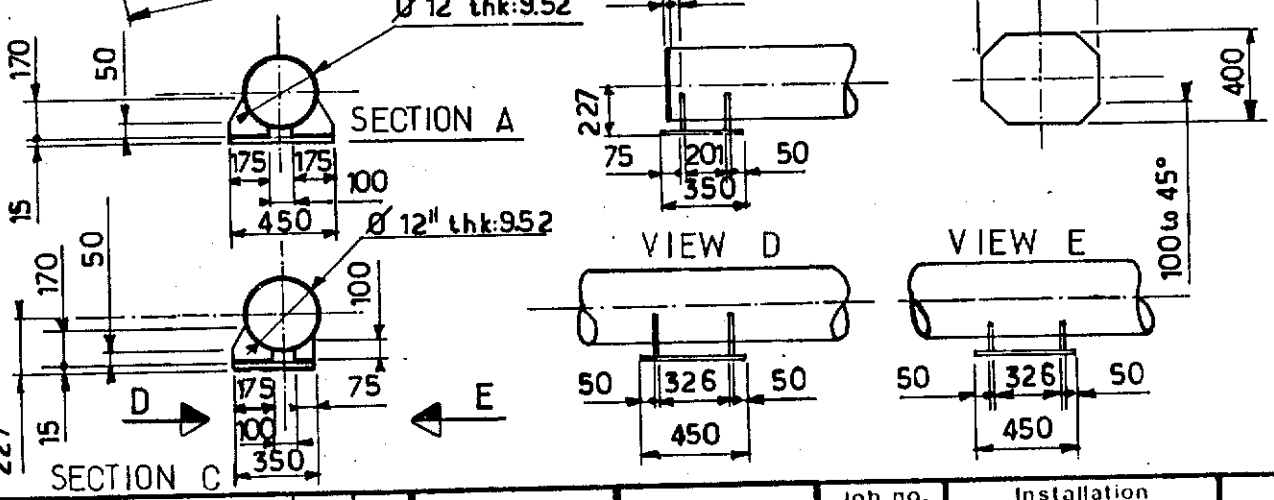

Rev.	Date	DESCRIPTION	by	app.
1	1283	UP DATED	BVH	J.LC

Contractor JVD 1029_40.14

elf aquitaine norge a/s
p.o.box 168
4001 Stavanger

elf
FRIGG FIELD

Job no.	Installation	System
	CDP 1	UNDERWATER
Scale 1:33	CONDUCTOR GUIDE N°23 CELL C SECONDARY FRAME LEVEL C	
Dwgr. no. FF 91_36_35_1344.	No. 1	Sheet

CDP 1 AS BUILT DRAWINGS

REFERENCE DRAWING LIST FOR:

ORIGINATOR	CONSTRUCTION DRAWING REF.	TITLE	Rev	Sheet
C.G. DORIS	AI. MP. QF. 1081	SECONDARY FRAME FOR RULING OF THE CONDUCTOR SELEEVE ZONE C.	2	

ELF DRAWING NUMBER	REVISION Index	REVISION Date	TITLE

Rev.	Date	DESCRIPTION	by	app.

Contractor

elf aquitaine norge a/s
p.o.box 168
4001 Stavanger

elf

FRIGG FIELD

Job no.	Installation	System
	CDP 1	UNDERWATER
Scale		
Dwgr. no. FF 1344		

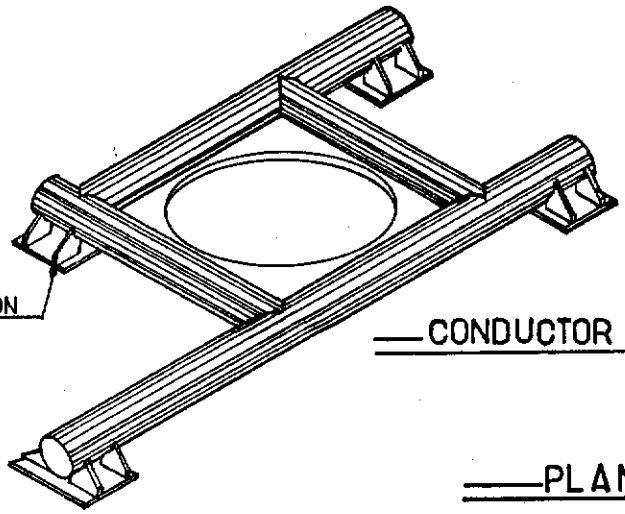

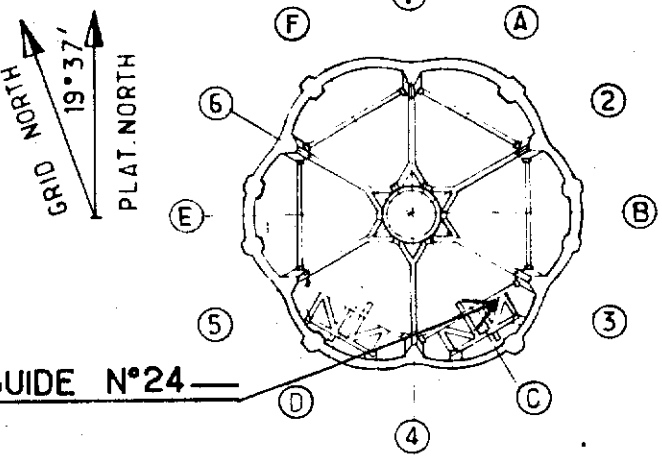

CONDUCTOR GUIDE N°24

KEY PLAN

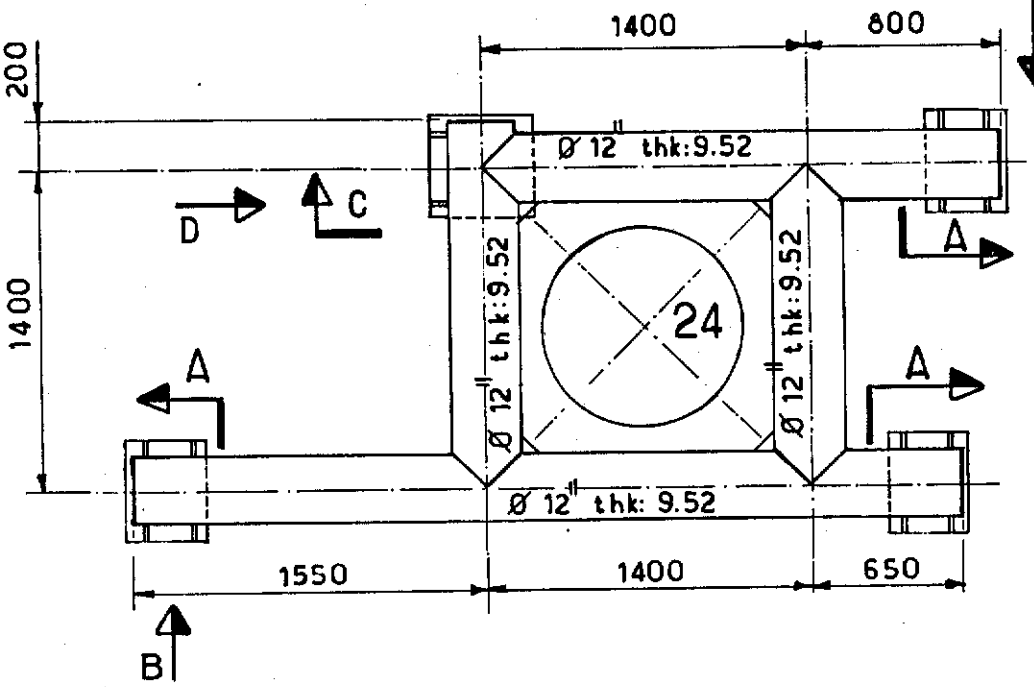

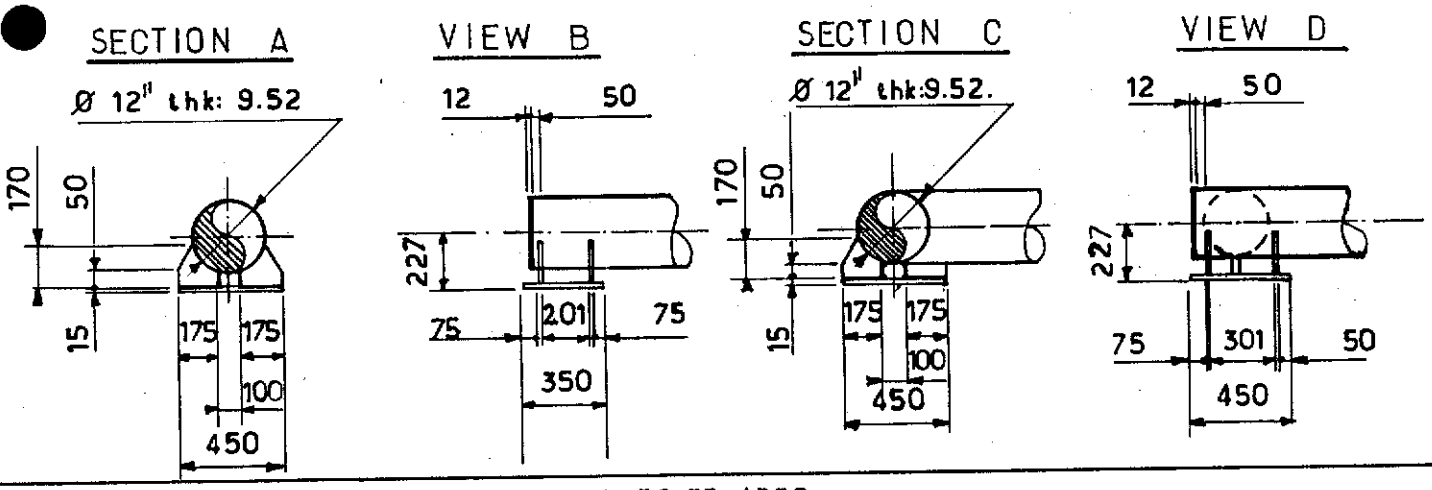

NOTES FOR LOCATION SEE SK FF 91_36_35_1332.
FOR CONDUCTOR SLEEVE SEE SK FF_91_36_35_1491.

Rev.	Date	DESCRIPTION	by	app.
1	12.83	UP DATED	BV.H	J.C

Contractor JVD 1029_40,15

elf aquitaine norge a/s
p.o.box 168
4001 Stavanger

elf
FRIGG FIELD

Job no.	Installation	System
	CDP 1	UNDERWATER
Scale 1:33	CONDUCTOR GUIDE N°24 CELL C SECONDARY FRAME LEVEL G	
Dwgr. no. FF 91_36_35_1345.	Rev. 1	Sheet

CDP 1 AS BUILT DRAWINGS

FERENCE DRAWING LIST FOR:

IGINATOR	CONSTRUCTION DRAWING REF.	TITLE	Rev	Sheet	Size
DORIS	A1. MP. QF. 1078	SECONDARY FRAME FOR	1		A1.
		RULING OF THE CONDUCTOR			
		SELEEVE ZONE C.			

F DRAWING NUMBER	REVISION Index	REVISION Date	TITLE

e	DESCRIPTION	by	app.
tor			

elf aquitaine norge a/s
p.o.box 168
4001 Stavanger

elf
FRIGG FIELD

Job no.	Installation CDP 1	System UNDERWATER
Scale		
Dwgr. no. FF 1345	No.	Sheet 1

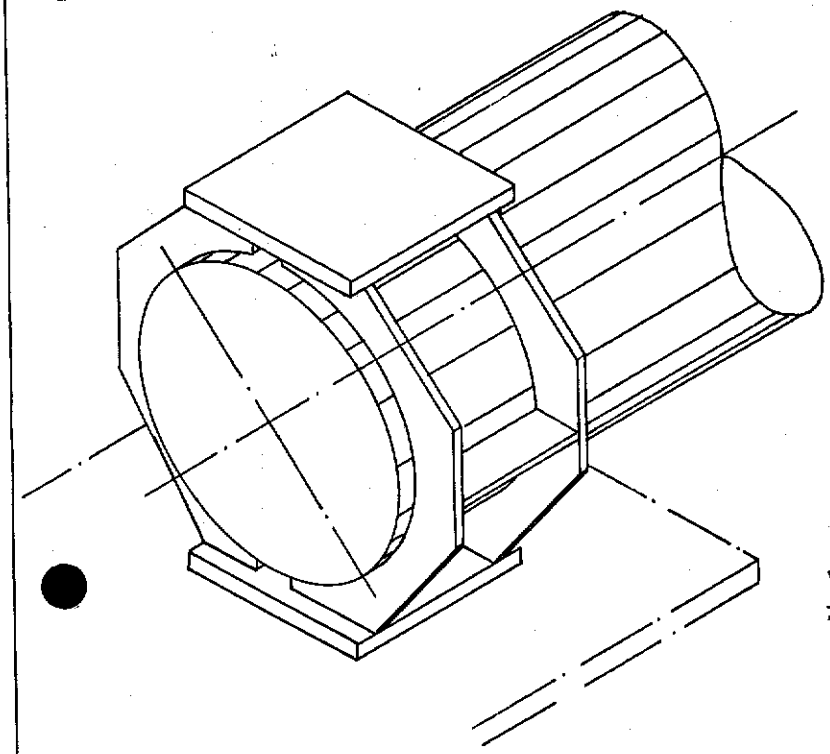

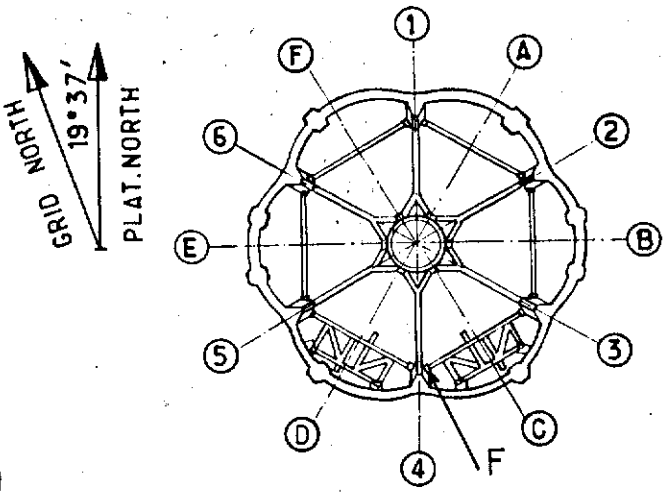

KEY PLAN

VIEW F

SECTION B B'

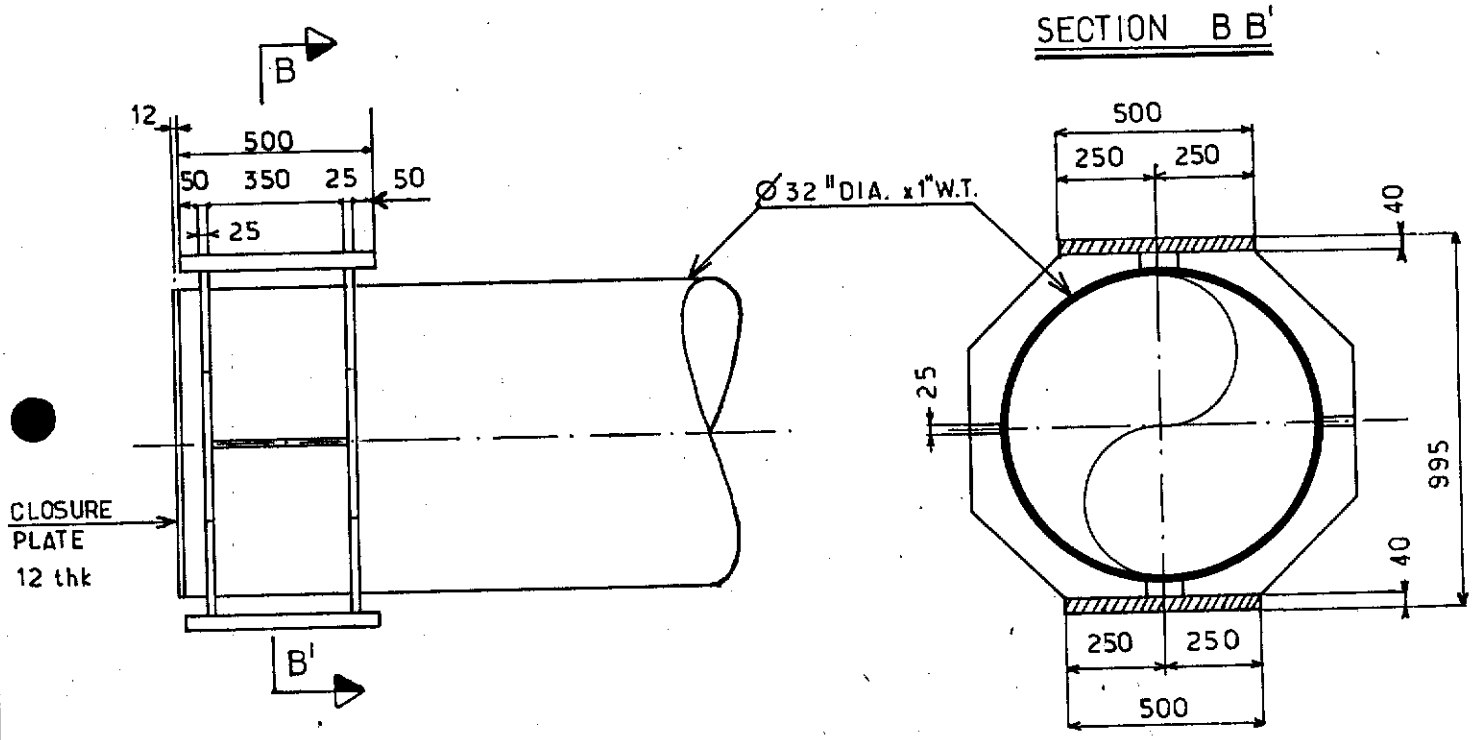

NOTES

FOR LOCATION SEE SK FF_91_36_35_1332.
FOR BOX FOR FREE LOCK SEE SK FF_91_36_35_1348.

Rev.	Date	DESCRIPTION	by	app.
1	12.83	UP DATED	BVH	

Contractor JVD 1029-40-16

elf aquitaine norge a/s
p.o.box 168
4001 Stavanger

elf
FRIGG FIELD

Job no.	Installation	System
	CDP 1	UNDERWATER
Scale 1:20	FREE LOCK PIPE END GC1 CELL C LEVEL G	
Dwgr. no. FF 91·36·35·1346	Rev 1	Sheet /

Form 100 318

CDP 1 AS BUILT DRAWINGS

REFERENCE DRAWING LIST FOR:

ORIGINATOR	CONSTRUCTION DRAWING REF.	TITLE	Rev	Sheet	Size
C.G. DORIS	A1.M.P. QF. 1190	PIPE END FOR FREE LOCK	1		A1
		OF GUIDE FRAME Ø32			
		LEVEL G. CELL C.			

ELF DRAWING NUMBER	REVISION		TITLE
	Index	Date	

Rev.	Date	DESCRIPTION	by	app.

Contractor

elf aquitaine norge a/s
p.o.box 168
4001 Stavanger

elf
FRIGG FIELD

Job no.	Installation	System
	CDP 1	UNDERWATER
Scale		
Dwgr. no. FF ___ ___ 1346	Rev.	Sheet /

Form 100 318

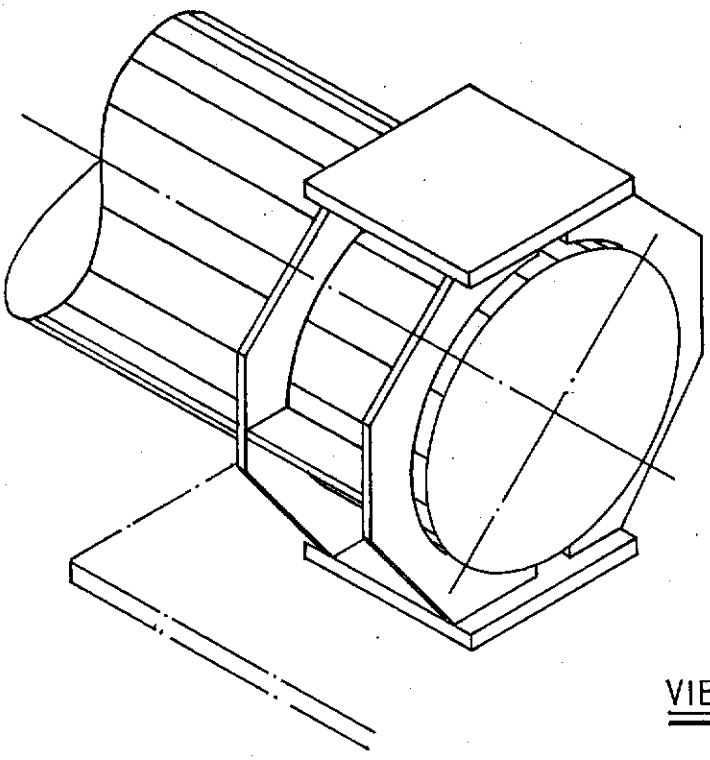

VIEW F

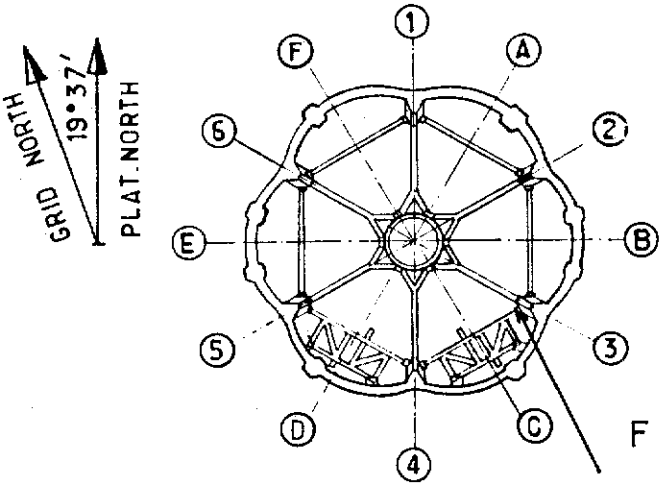

KEY PLAN

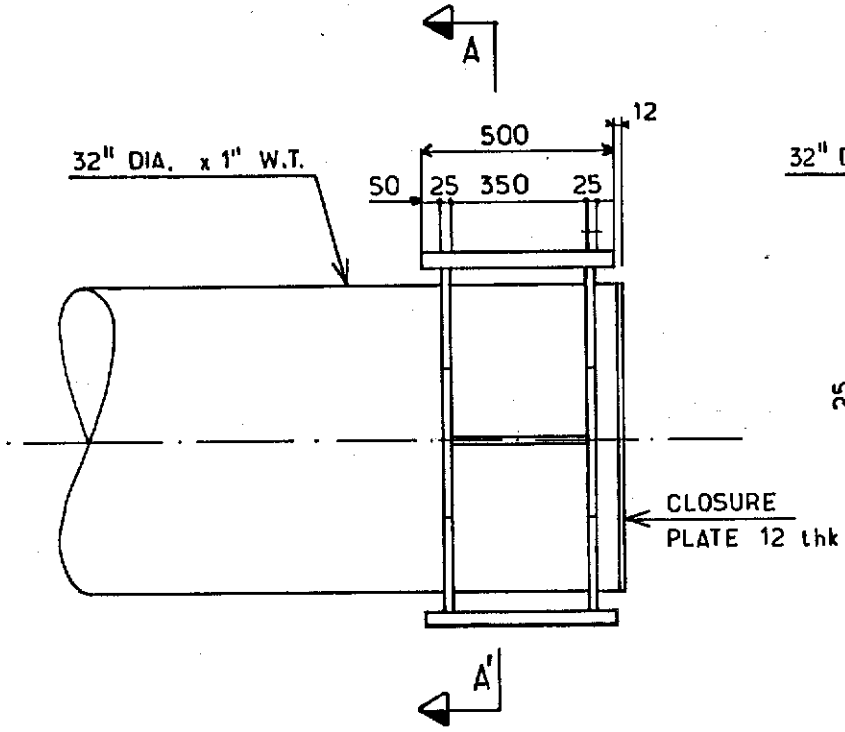

SECTION AA'

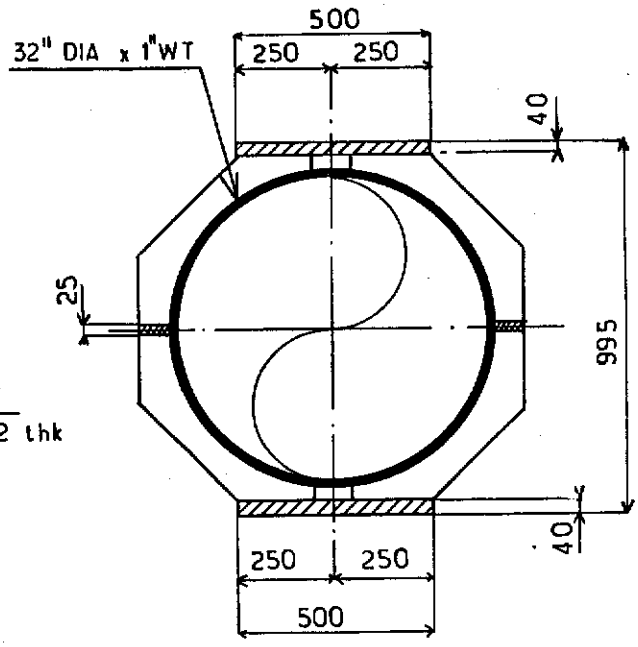

NOTES

FOR LOCATION SEE SK FF. 91. 36.35. 1332
FOR BOX FOR FREE LOCK SEE SK FF. 91.36.35. 1349

Rev.	Date	DESCRIPTION	by	app.
1.	12.83	UP DATED	BVH	JAC

Contractor JVD 1029 . 40.17.

elf aquitaine norge a/s
p.o.box 168
4001 Stavanger

elf
FRIGG FIELD

Job no.	Installation	System
	CDP 1	UNDERWATER
Scale 1:20	FREE LOCK PIPE END GC4 CELL C LEVEL G	
Dwgr. no. FF 91·36·35·1347	Rev 1	Sheet /

Form 100 318

CDP 1 AS BUILT DRAWINGS

REFERENCE DRAWING LIST FOR:

ORIGINATOR	CONSTRUCTION DRAWING REF.	TITLE	Rev	Sheet	Size
C.G. DORIS	A1. M.P. QF. 1190	PIPE END FOR FREE LOCK	1		A1
		OF GUIDE FRAME Ø32			
		LEVEL G. CELL C.			

ELF DRAWING NUMBER	REVISION Index	REVISION Date	TITLE

Rev.	Date	DESCRIPTION	by	app.

Contractor

elf aquitaine norge a/s
p.o.box 168
4001 Stavanger

elf

FRIGG FIELD

Job no.	Installation	System
	CDP 1	UNDERWATER
Scale		
Dwgr. no. FF ___ ___ 1347	Rev	Sheet /

Form 100 318

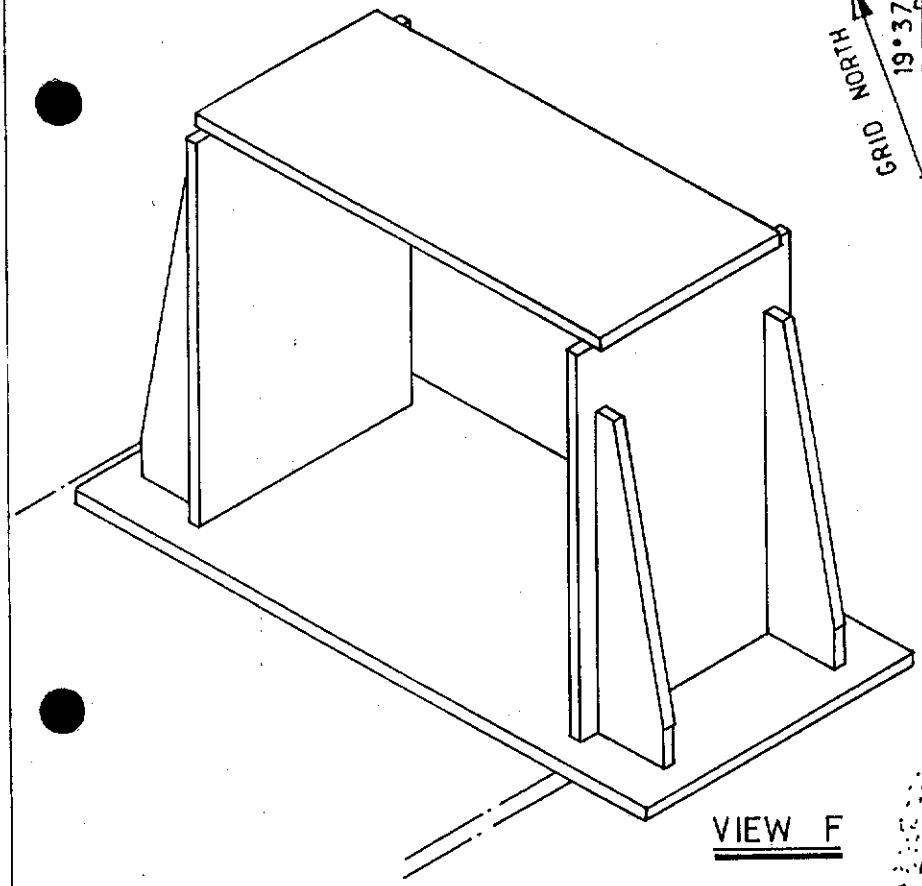

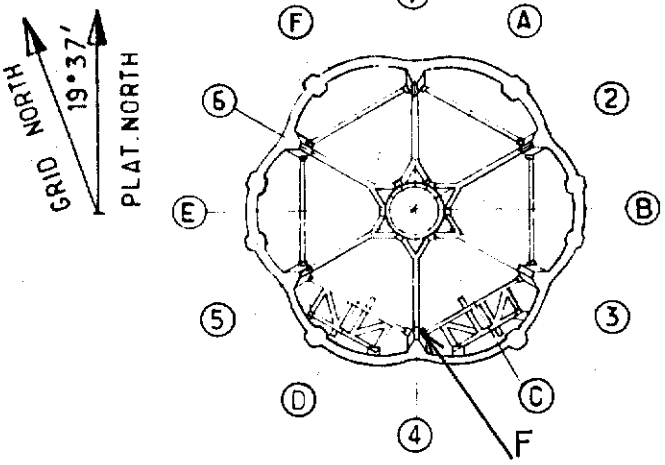

KEY PLAN

VIEW F

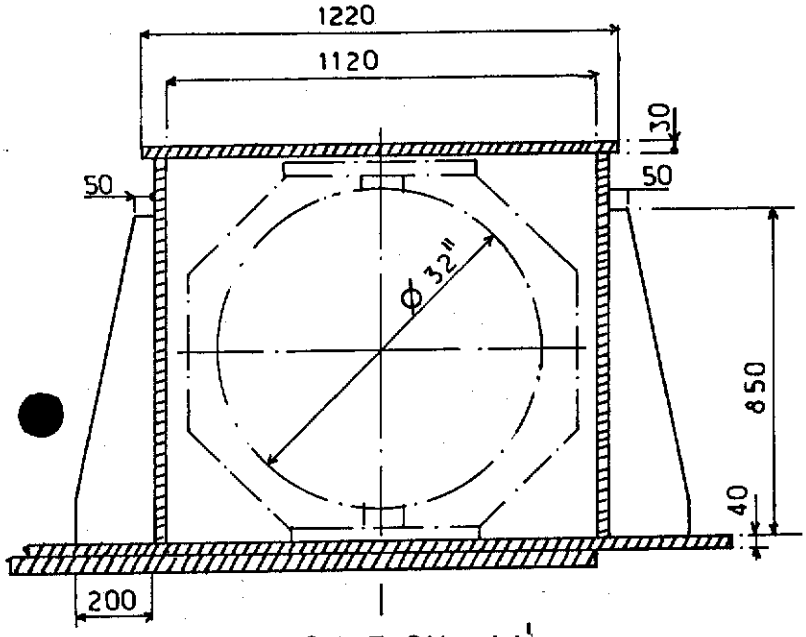

SECTION AA'

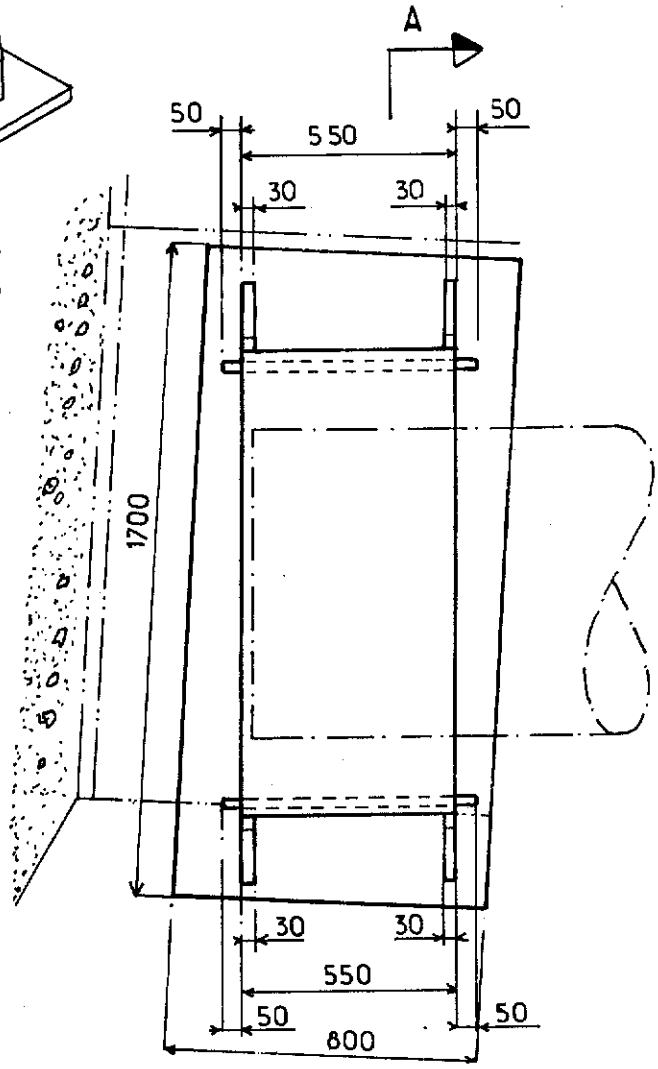

NOTES

FOR LOCATION SEE SK FF_91_36_35_1332.
FOR DETAIL OF FREE LOCK PIPE END SEE SK FF_91_36_35_1346.

Rev.	Date	DESCRIPTION	by	app.
1	12.83	UP DATED	B.VH	J.LC

Contractor JVD 1029.40.18.

elf aquitaine norge a/s
p.o.box 168
4001 Stavanger

elf
FRIGG FIELD

Job no.	Installation	System
	CDP 1	UNDERWATER
Scale 1:20	BOX FOR FREE LOCK GC1 CELL C LEVEL G	
Dwgr. no. FF 91·36·35·1348	Rev. 1	Sheet

CDP 1 AS BUILT DRAWINGS

REFERENCE DRAWING LIST FOR:

ORIGINATOR	CONSTRUCTION DRAWING REF.	TITLE	Rev	Sheet	Size
- C G. DORIS.	A1. MP. QF. 1245	BOX FOR FREE LOCK.	1		A1
		ZONE C . LEVEL G .			

ELF DRAWING NUMBER	REVISION Index	REVISION Date	TITLE

Rev.	Date	DESCRIPTION	by	app.

Contractor

elf aquitaine norge a/s
p.o.box 168
4001 Stavanger

elf

FRIGG FIELD

Job no.	Installation	System
	CDP 1	UNDERWATER
Scale	BOXE FOR FREE LOCK GC1	
Dwgr. no. FF 1348	Rev.	Sheet /

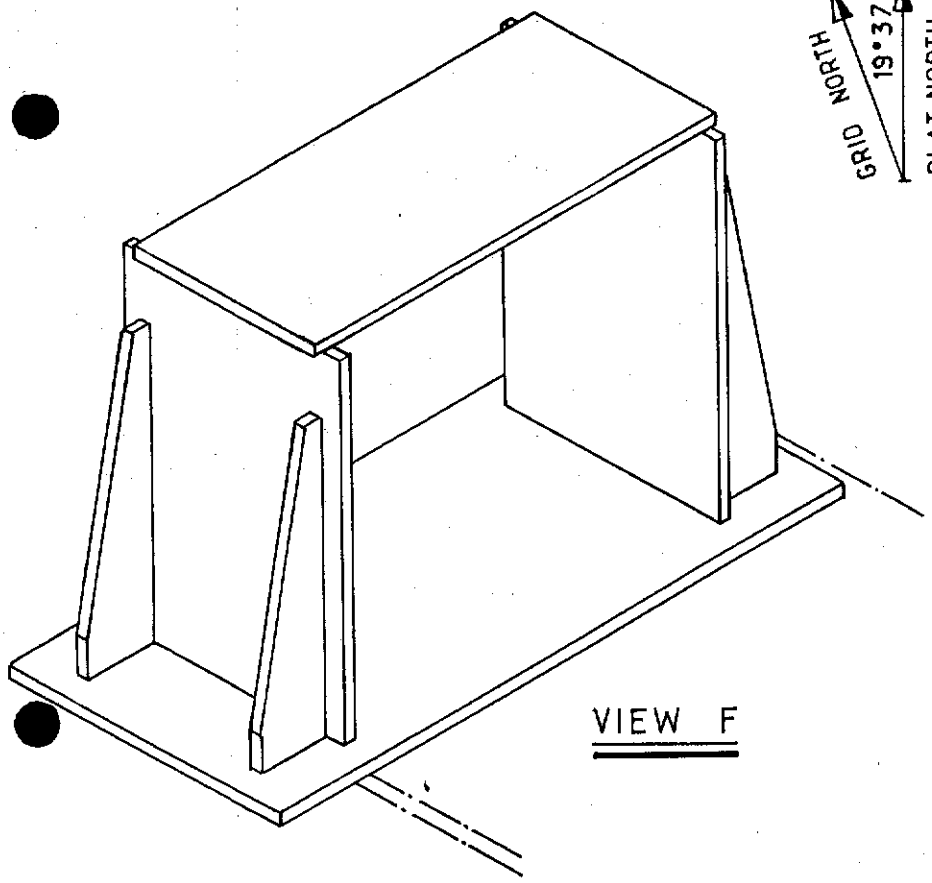

VIEW F

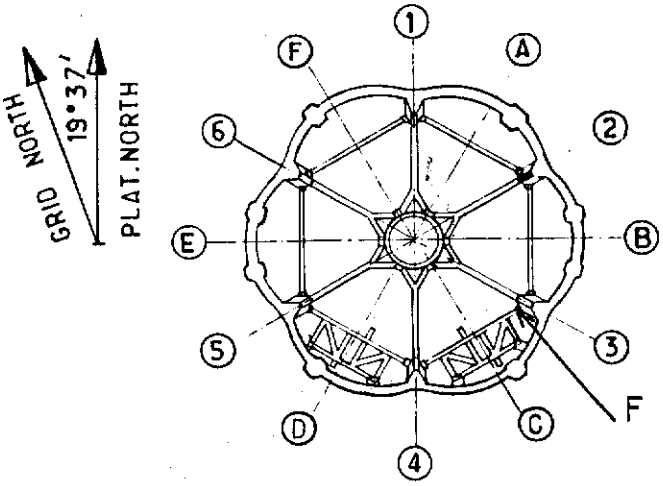

KEY PLAN

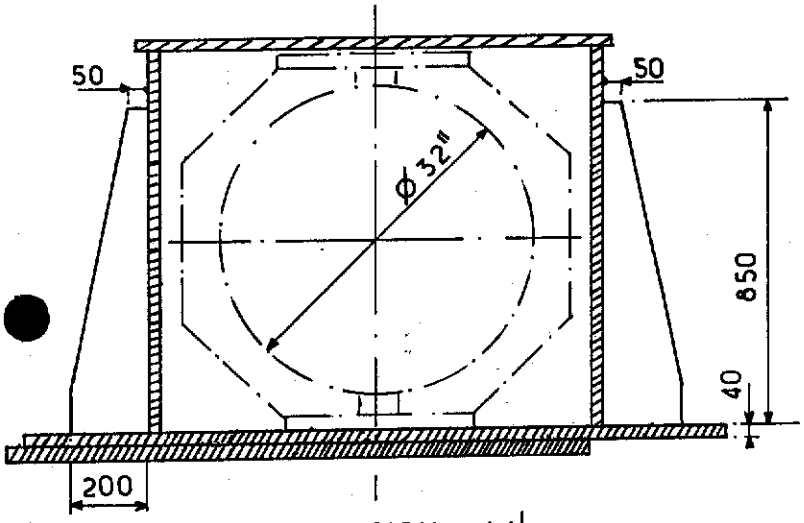

SECTION AA'

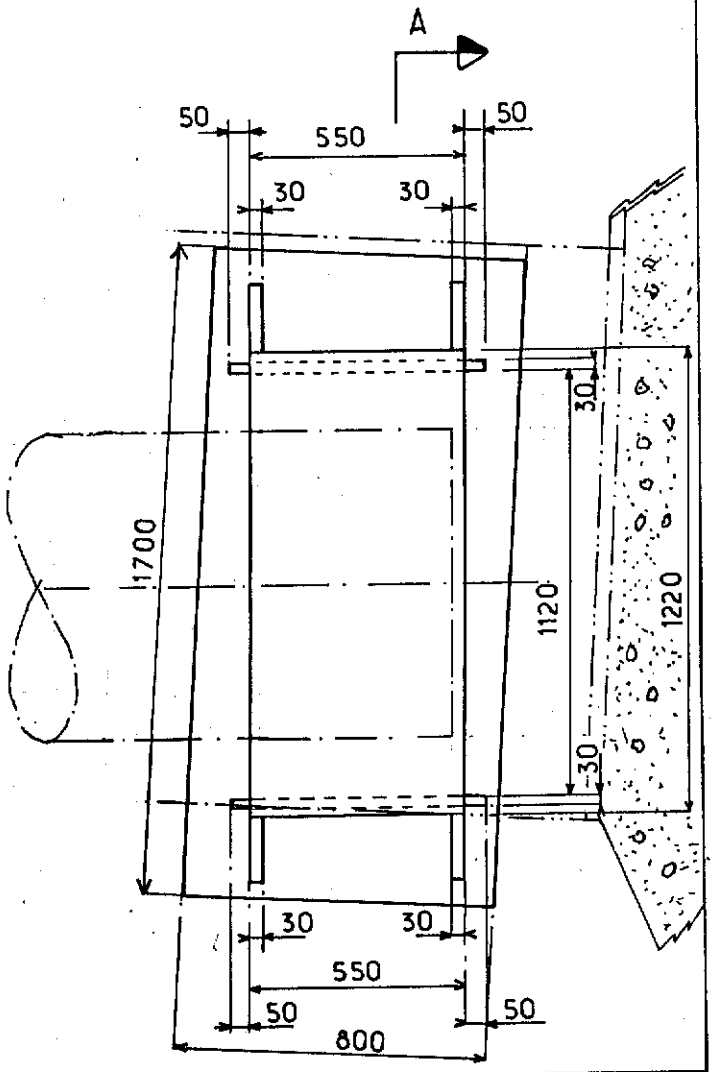

NOTES

FOR LOCATION SEE SK FF_91_36_35_1332.
FOR DETAIL OF FREE LOCK PIPE END SEE SK FF_91.36.35.1347.

Rev.	Date	DESCRIPTION	by	app.
1	12.83	UP DATED	BVH	JLC

Contractor JVD 1029_40_19.

elf aquitaine norge a/s
p.o.box 168
4001 Stavanger

elf
FRIGG FIELD

Job no.	Installation	System
	CDP 1	UNDERWATER
Scale 1:20	BOX FOR FREE LOCK GC4 CELL C LEVEL G	
Dwgr. no. FF 91·36·35·1349	Rev 1	Sheet /

CDP 1 AS BUILT DRAWINGS

REFERENCE DRAWING LIST FOR:

ORIGINATOR	CONSTRUCTION DRAWING REF.	TITLE	Rev	Sheet	Size
- C G. DORIS.	A1. MP. QF. 1245	BOX FOR FREE LOCK.	1		A1
		ZONE C . LEVEL G .			

ELF DRAWING NUMBER	REVISION Index	REVISION Date	TITLE

Rev.	Date	DESCRIPTION	by	app.

Contractor

elf aquitaine norge a/s
p.o.box 168
4001 Stavanger

elf

FRIGG FIELD

Job no.	Installation CDP 1	System UNDERWATER
Scale	BOXE FOR FREE LOCK GC4	
Dwgr. no. FF ___ ___ 1349	Rev.	Sheet /

Form 100 318

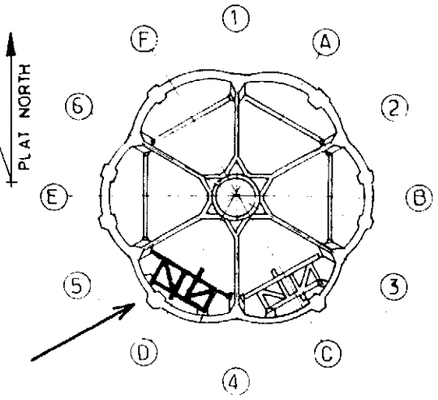

KEY PLAN

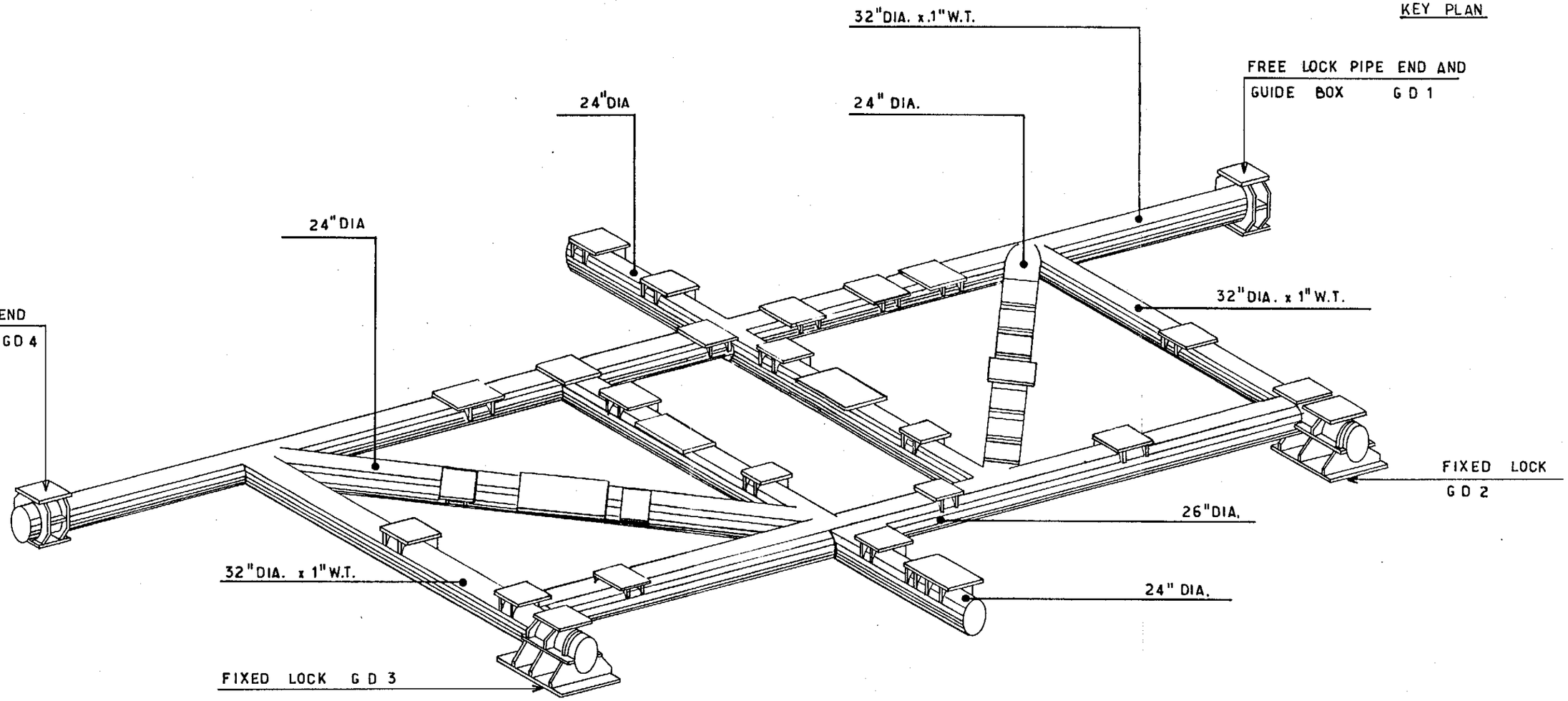

NOTES

FOR SECONDARY FRAME DETAILS SEE SK FF 91-36-35-1357 TO FF 91-36-35-1368.
FOR FREE LOCK PIPE ENDS AND GUIDE BOXES SEE SK FF 91 36 35 1369/1370/1371/1372.

Rev.	Date	DESCRIPTION	by	app.
1	12,83	UP DATED	BJH	JLC

Contractor JVD 1029 40 26

elf aquitaine norge a/s
p.o.box 168
4001 Stavanger

elf
FRIGG FIELD

Job no.	Installation	System
	CDP 1	UNDERWATER
Scale —	GENERAL VIEW OF SECONDARY FRAME SUPPORT CELL D LEVEL G	
Dwgr. no FF 91-36-35-1356	1	—

CDP 1 AS BUILT DRAWINGS

REFERENCE DRAWING LIST FOR: CONDUCTOR GUIDE FRAME

ORIGINATOR	CONSTRUCTION DRAWING REF.	TITLE	Rev	Sheet	Size
C. G DORIS	A0. MP. ØF 1045	WORKING DRAWING AND CUTTING OUT OF GUIDE FRAME Ø32"	1		A0
" "	A1- MP- ØF 1108	GENERAL LAYOUT OF GUIDE FRAME	1		A1
" "	A1- MP. ØF 1109	GENERAL LAYOUT OF BASE PLATES	1		A1
" "	A1-MP. ØF 1111	POSITION OF DRILLING HOLES	2		A1
" "	A1-MP ØF 1181	FIXED LOCK FOR GUIDE FRAME Ø32" G.D I	3		A1
" "	A1-MP- ØF 1182	FIXED LOCK FOR GUIDE FRAME Ø32" G.D II	3		A1
" "	A1- MP ØF 1161	PIPE END OF GUIDE FRAME	1		A1
" "	A1. MP. ØF 1189	PIPE END FOR FREE LOCK	3		A1
" "	A1 - MP ØF 1245	BOX FOR FREE LOCK	1		A1

ELF DRAWING NUMBER	REVISION Index	REVISION Date	TITLE

Rev.	Date	DESCRIPTION	by	app.

Contractor

elf aquitaine norge a/s
p.o.box 168
4001 Stavanger

elf
FRIGG FIELD

Job no.	Installation	System
	CDP 1	UNDERWATER
Scale		
Dwgr. no. FF 1355	Rev.	Sheet 1

Form 100.318

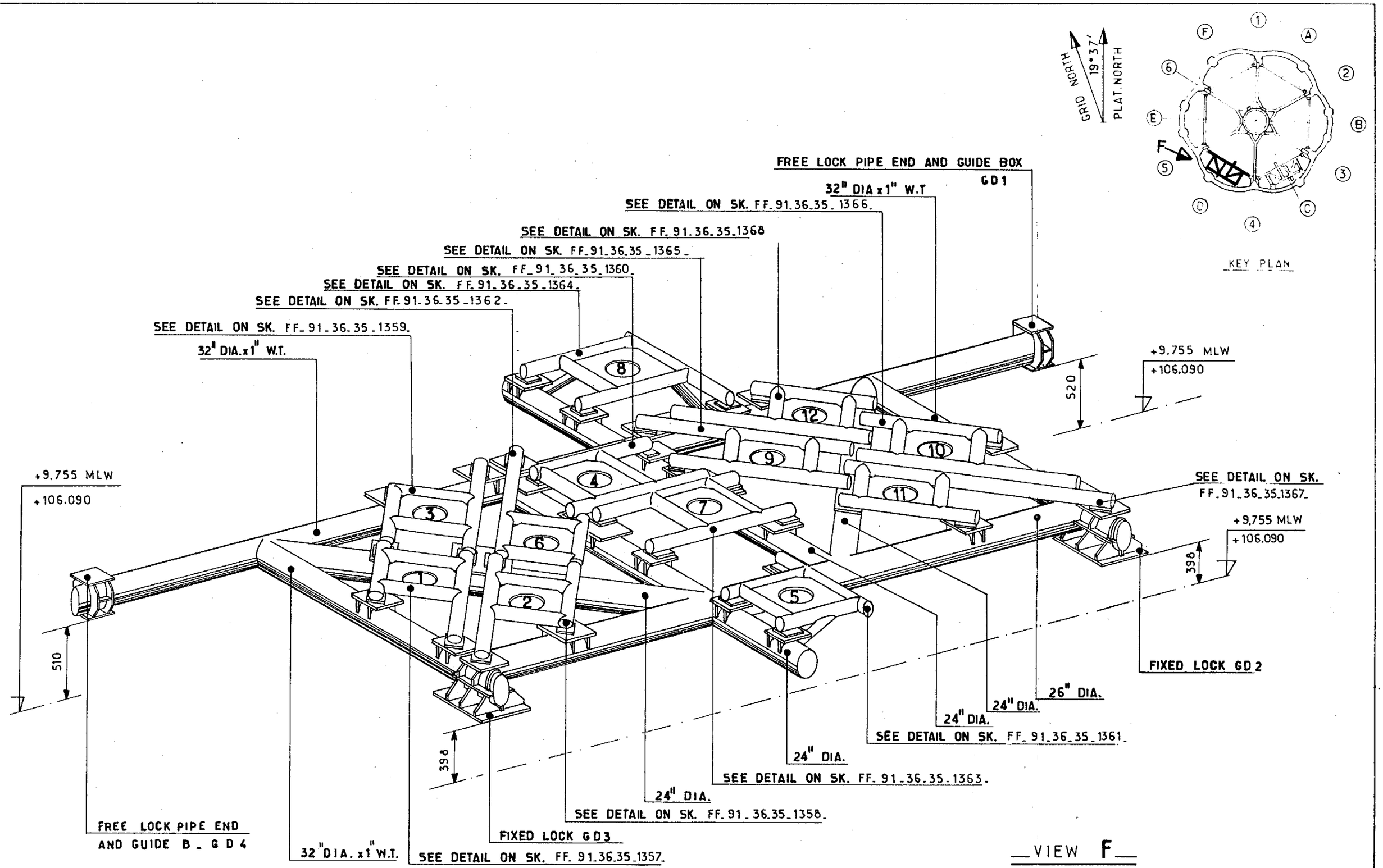

NOTES

FOR FREE LOCK PIPE ENDS AND GUIDE BOXES SEE SK FF 91-36-35-1369/1370 / 1371 / 1372.

Rev.	Date	DESCRIPTION	by	app.
1	12.83	UP DATED	BVH	HLC

Contractor JVD_1029_40.25.

elf aquitaine norge a/s
p.o.box 168
4001 Stavanger

elf
FRIGG FIELD

Job no.	Installation	System
	CDP 1	UNDERWATER
Scale —	GENERAL VIEW OF CONDUCTOR GUIDE FRAME CELL D LEVEL G	
Dwgr. no FF 91.36.35.1355.	1	—

CDP 1 AS BUILT DRAWINGS

REFERENCE DRAWING LIST FOR:

ORIGINATOR	CONSTRUCTION DRAWING REF.	TITLE	Rev	Sheet	Size
CG. DORIS	A1.MP.QF.1109	GENERAL LAYOUT OF THE	1		A1
		BASE PLATES			
		LEVEL G CELL D			
" "	A1.MP.QF.1147	DETAIL OF BASE PLATE	1		A1
" "	A1.MP.QF.1148	" " " "	1		A1
" "	A1.MP.QF.1149	" " " "	1		A1
" "	A1.MP.QF.1154	" " " "	1		A1

ELF DRAWING NUMBER	REVISION Index	REVISION Date	TITLE

Rev.	Date	DESCRIPTION	by	app.

Contractor

elf aquitaine norge a/s
p.o.box 168
4001 Stavanger

elf

FRIGG FIELD

Job no.	Installation	System
	CDP 1	UNDERWATER
Scale		
Dwgr. no. FF 1356	Rev.	Sheet /

Form 100 318

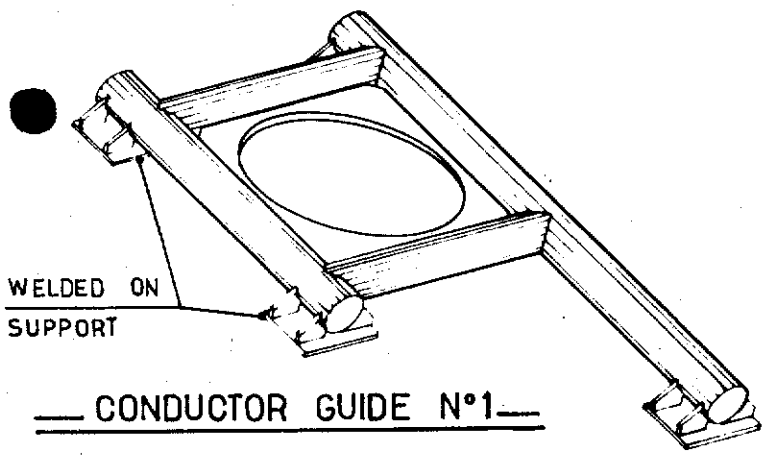

CONDUCTOR GUIDE N°1

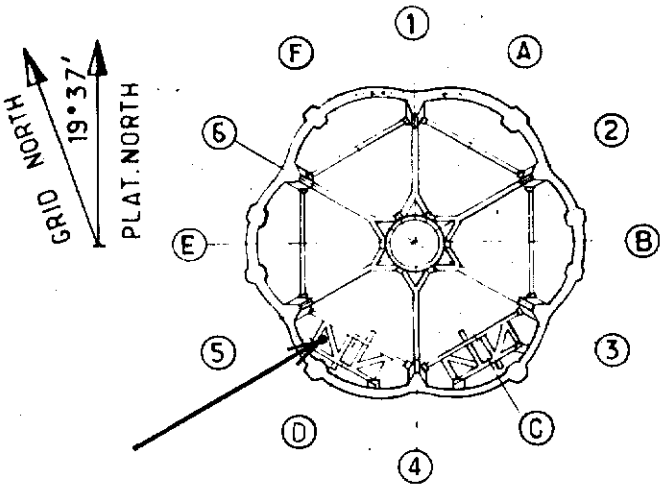

KEY PLAN

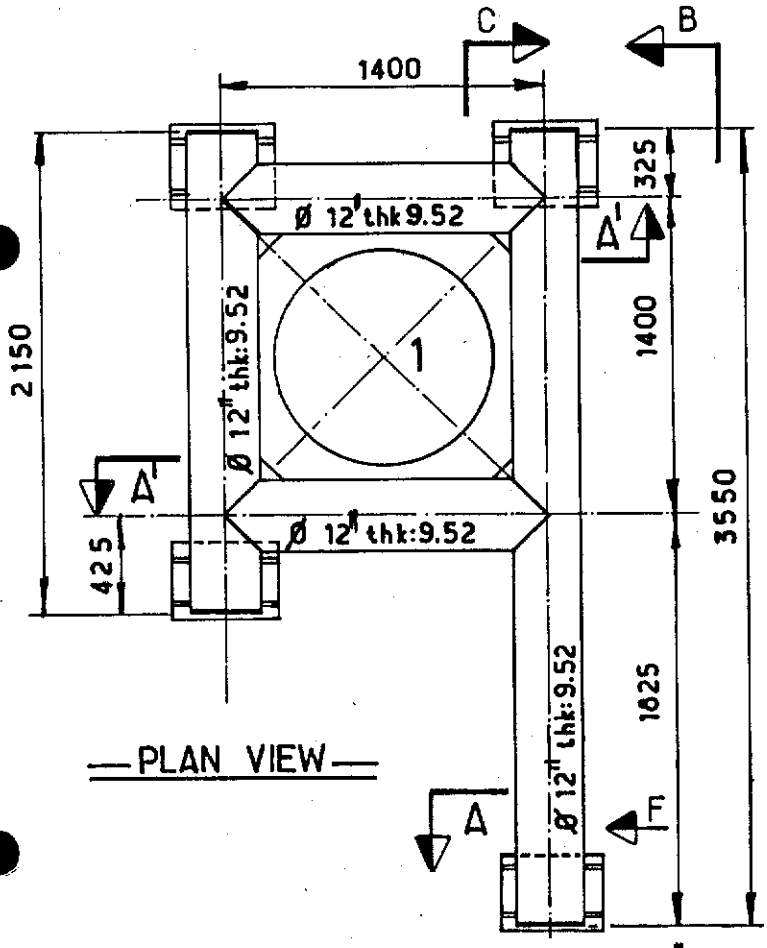

PLAN VIEW

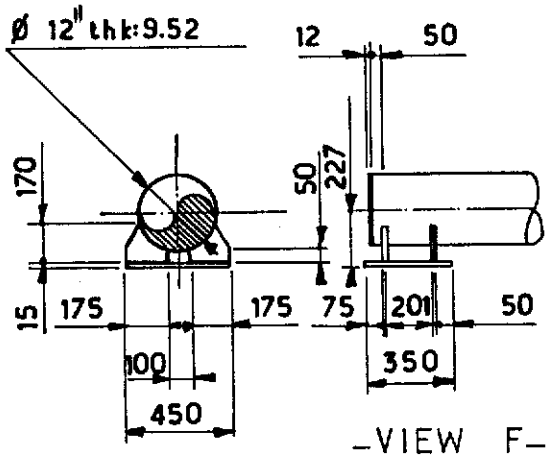

SECTION A

VIEW F

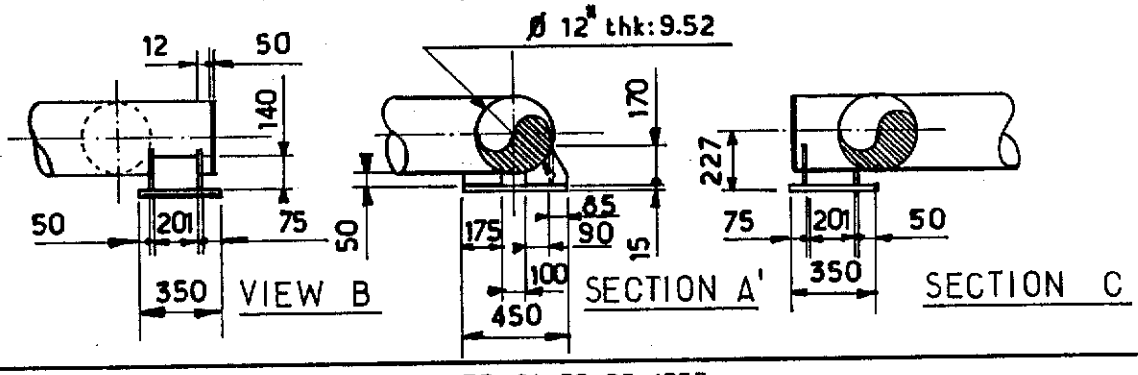

VIEW B

SECTION A'

SECTION C

NOTES: FOR LOCATION SEE SK FF. 91.36.35.1355.
FOR CONDUCTOR SLEEVE SEE SK FF. 91.36.35.1491.

Rev.	Date	DESCRIPTION	by	app.
1	12.83	UP DATED	B.V.H	J.L.C

Contractor JVD 1029_40.27.

elf aquitaine norge a/s
p.o.box 168
4001 Stavanger

elf
FRIGG FIELD

Job no.	Installation	System
	CDP 1	UNDERWATER
Scale 1:33	CONDUCTOR GUIDE N°1 CELL D SECONDARY FRAME LEVEL G	
Dwgr. no. FF 91.36.35.1357.	Rev. 1	Sheet /

CDP 1 AS BUILT DRAWINGS

REFERENCE DRAWING LIST FOR:

ORIGINATOR	CONSTRUCTION DRAWING REF.	TITLE	Rev	Sheet	Size
C.G. DORIS	A1. MP. QF. 1082	SECONDARY FRAME FOR	1		A1.
		RULING OF THE CONDUCTORS			
		SLEEVE ZONE D.			

ELF DRAWING NUMBER	REVISION Index	REVISION Date	TITLE

Rev.	Date	DESCRIPTION	by	app.

Contractor

elf aquitaine norge a/s
p.o.box 168
4001 Stavanger

elf

FRIGG FIELD

Job no.	Installation CDP 1	System UNDERWATER
Scale		
Dwgr. no. FF 1357	Rev.	Sheet 1

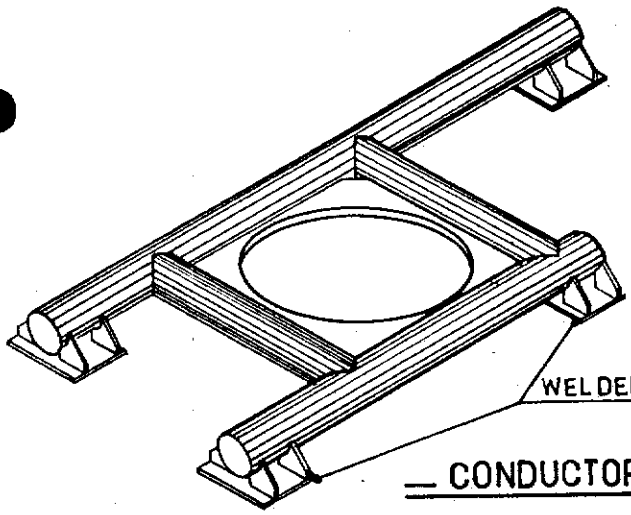

CONDUCTOR GUIDE N°2

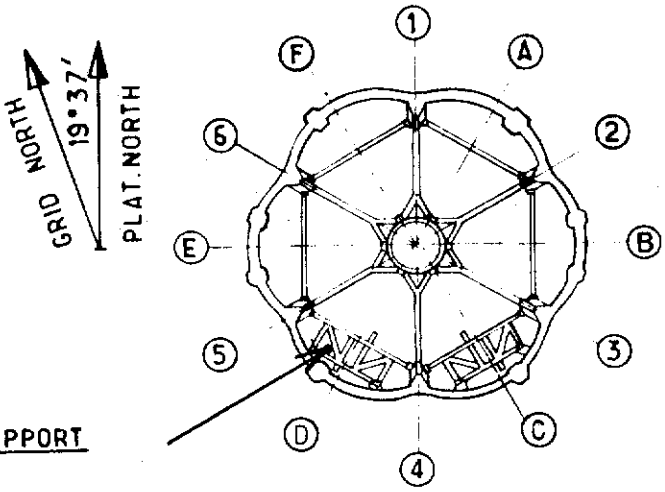

KEY PLAN

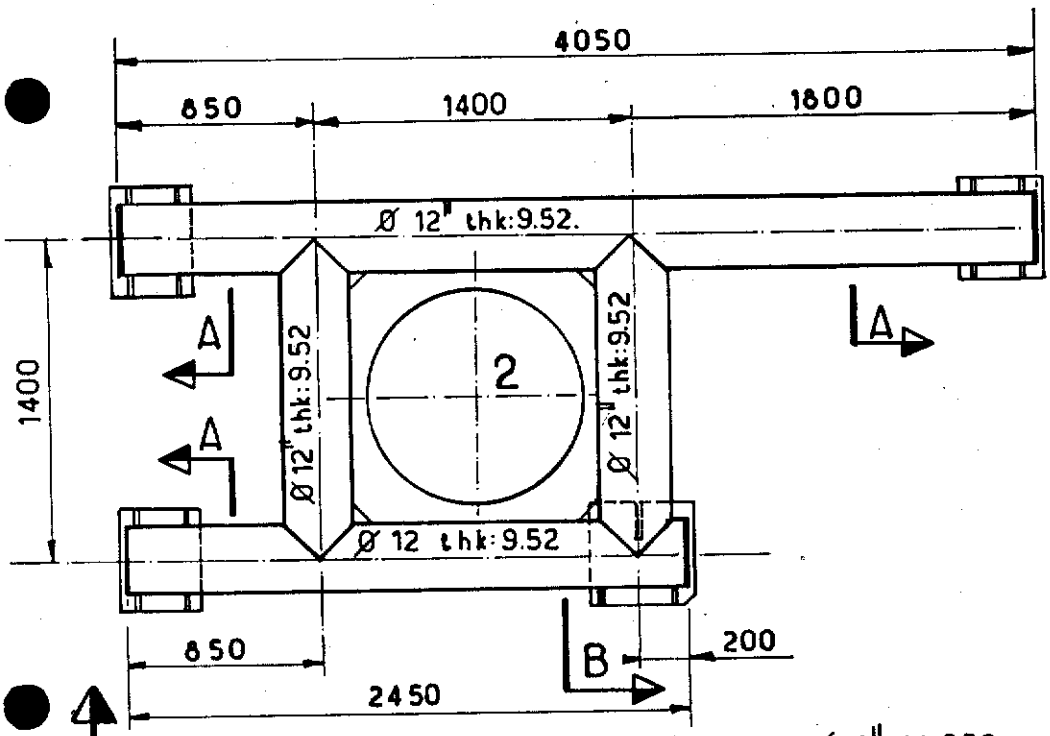

PLAN VIEW

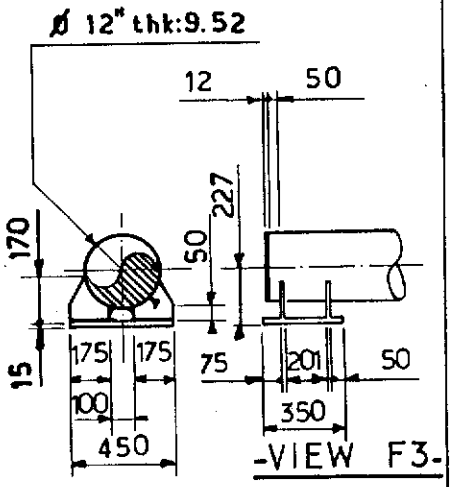

SECTION A

VIEW F3

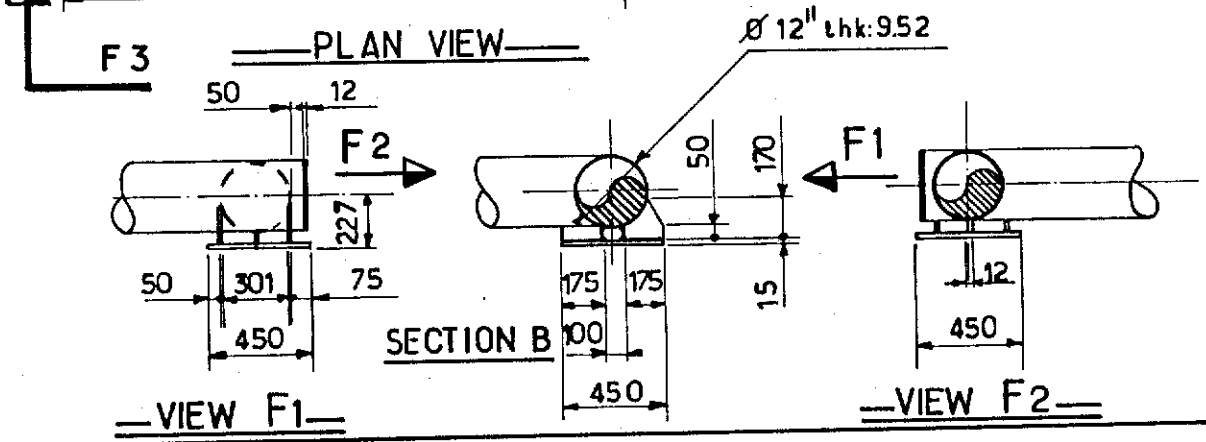

SECTION B

VIEW F1

VIEW F2

NOTES
FOR LOCATION SEE SK FF.91.36.35.1355.
FOR CONDUCTOR SLEEVE SEE SK FF.91.36.35.1491.

Rev.	Date	DESCRIPTION	by	app.
1	12.83	UP DATED	BVH	JLC

Contractor JVD 1029_40.28

elf aquitaine norge a/s
p.o.box 168
4001 Stavanger

elf
FRIGG FIELD

Job no.	Installation	System
	CDP 1	UNDERWATER
Scale 1:33	CONDUCTOR GUIDE N°2 CELL D SECONDARY FRAME LEVEL G	
Dwgr. no. FF 91_36_35_1358.	Rev 1	Sheet /

Form 100 318

CDP 1 AS BUILT DRAWINGS

REFERENCE DRAWING LIST FOR:

ORIGINATOR	CONSTRUCTION DRAWING REF.	TITLE	Rev	Sheet	Size
C. G. DORIS	41. MP. QF. 1084	SECONDARY FRAME FOR	1		A1
		RULING OF THE CONDUCTORS			
		SLEEVE ZONE D			

ELF DRAWING NUMBER	REVISION Index	REVISION Date	TITLE

Rev.	Date	DESCRIPTION	by	app.

Contractor

elf aquitaine norge a/s
p.o.box 168
4001 Stavanger

elf
FRIGG FIELD

Job no.	Installation CDP 1	System UNDERWATER
Scale		
Dwgr. no. FF ___ ___ 1358	Rev	Sheet /

Form 100 318

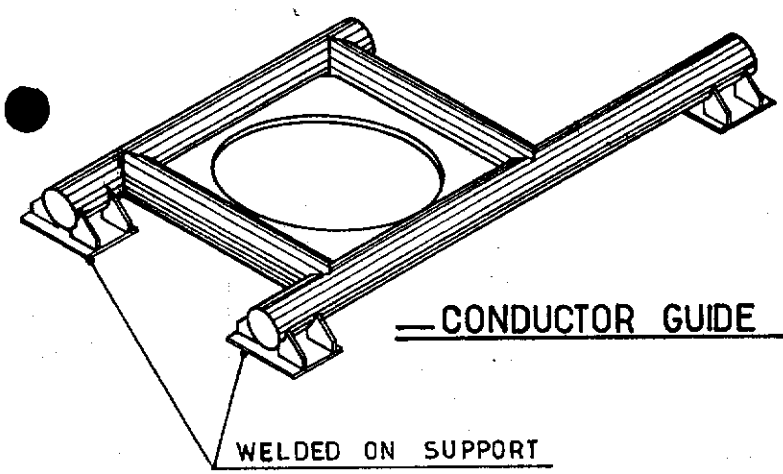

CONDUCTOR GUIDE N°3

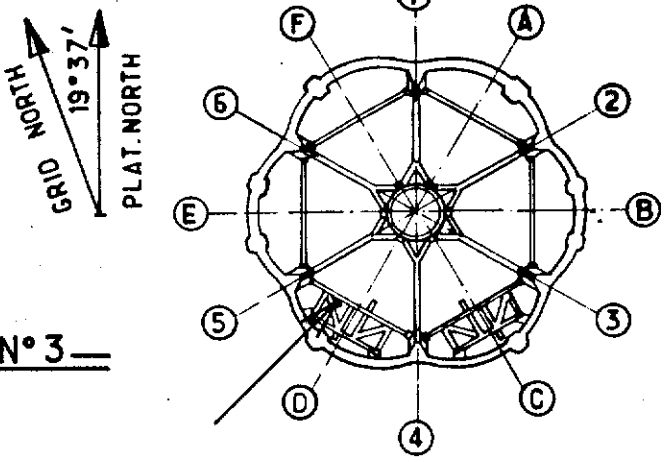

KEY PLAN

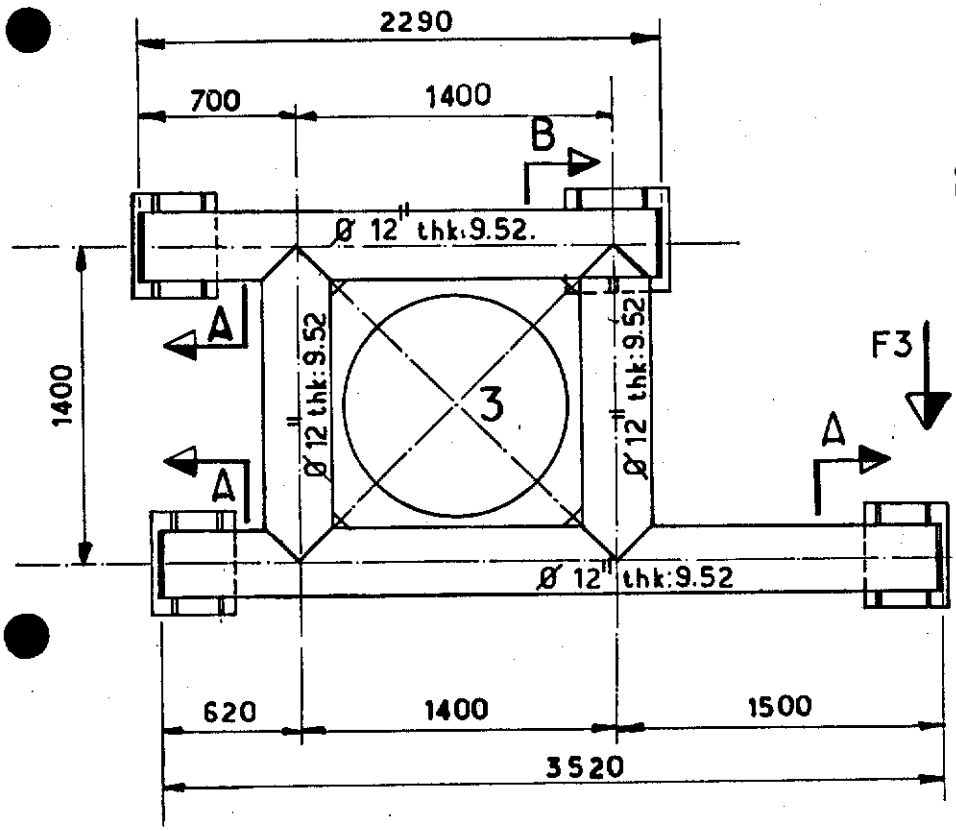

PLAN VIEW

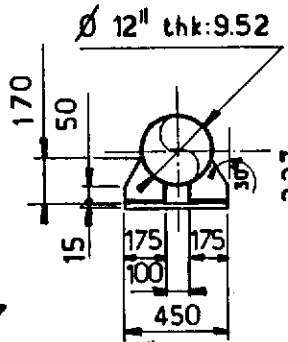

SECTION A

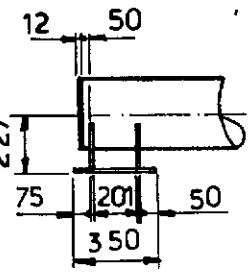

VIEW F3

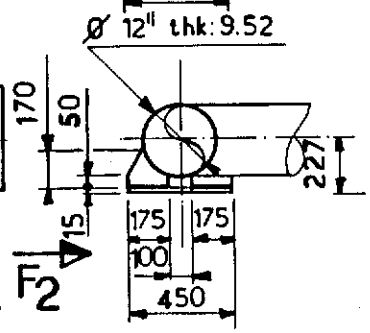

SECTION B

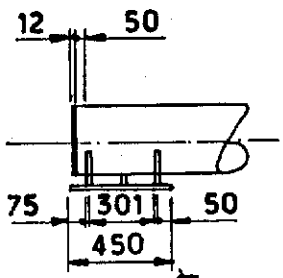

VIEW F2

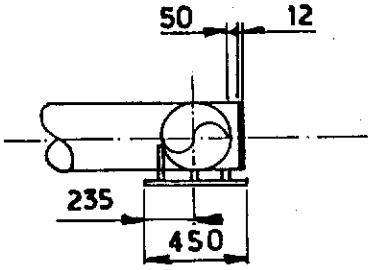

VIEW F1

NOTES

FOR LOCATION SEE SK FF-91.36.35-1355.

FOR CONDUCTOR SLEEVE SEE SK FF-91.36.35-1491.

Rev.	Date	DESCRIPTION	by	app.
1	12.83	UP DATED	LVH	FLC

Contractor JVD 1029_40.29

elf aquitaine norge a/s
p.o.box 168
4001 Stavanger

elf
FRIGG FIELD

Job no.	Installation CDP 1	System UNDERWATER
Scale 1:33	CONDUCTOR GUIDE N°3 CELL D SECONDARY FRAME LEVEL G	
Dwgr. no. FF. 91.36.35.1359.	Rev. 1	Sheet

Form 100.318

CDP 1 AS BUILT DRAWINGS

REFERENCE DRAWING LIST FOR:

ORIGINATOR	CONSTRUCTION DRAWING REF.	TITLE	Rev	Sheet	Size
C.G. DORIS	A1.MP.QF.1083	SECONDARY FRAME FOR	1		A1
		RULING OF THE CONDUCTORS			
		SELEEVE ZONE D.			

ELF DRAWING NUMBER	REVISION Index	REVISION Date	TITLE

Rev.	Date	DESCRIPTION	by	app.

Contractor

elf aquitaine norge a/s
p.o.box 168
4001 Stavanger

elf

FRIGG FIELD

Job no.	Installation	System
	CDP 1	UNDERWATER
Scale		
Dwgr. no. FF ___ ___ 1359	Rev	Sheet /

CONDUCTOR GUIDE N°4

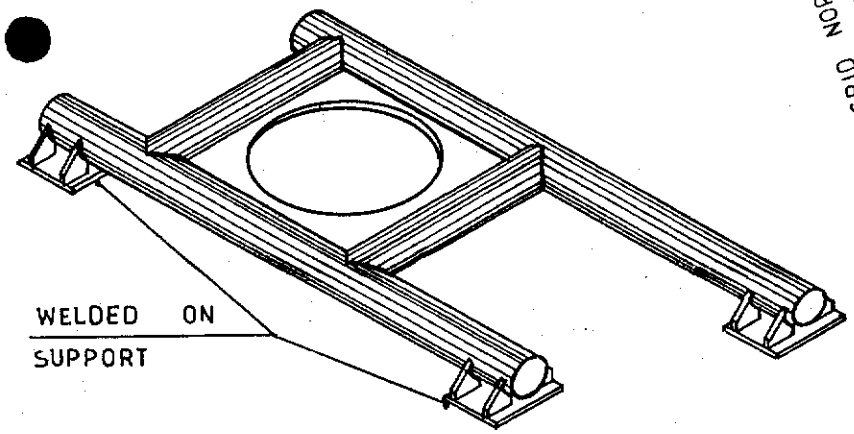

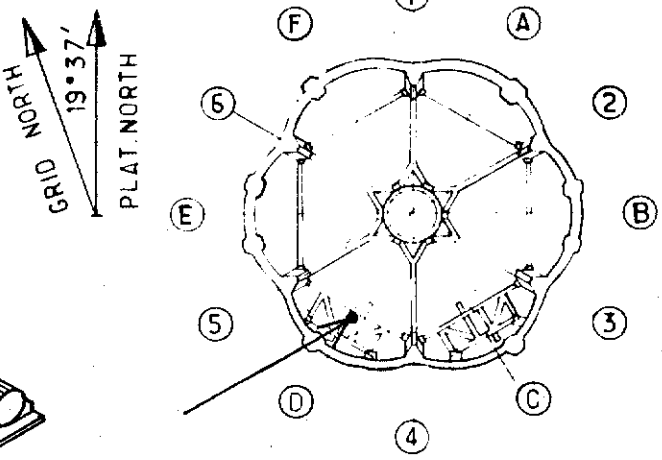

KEY PLAN

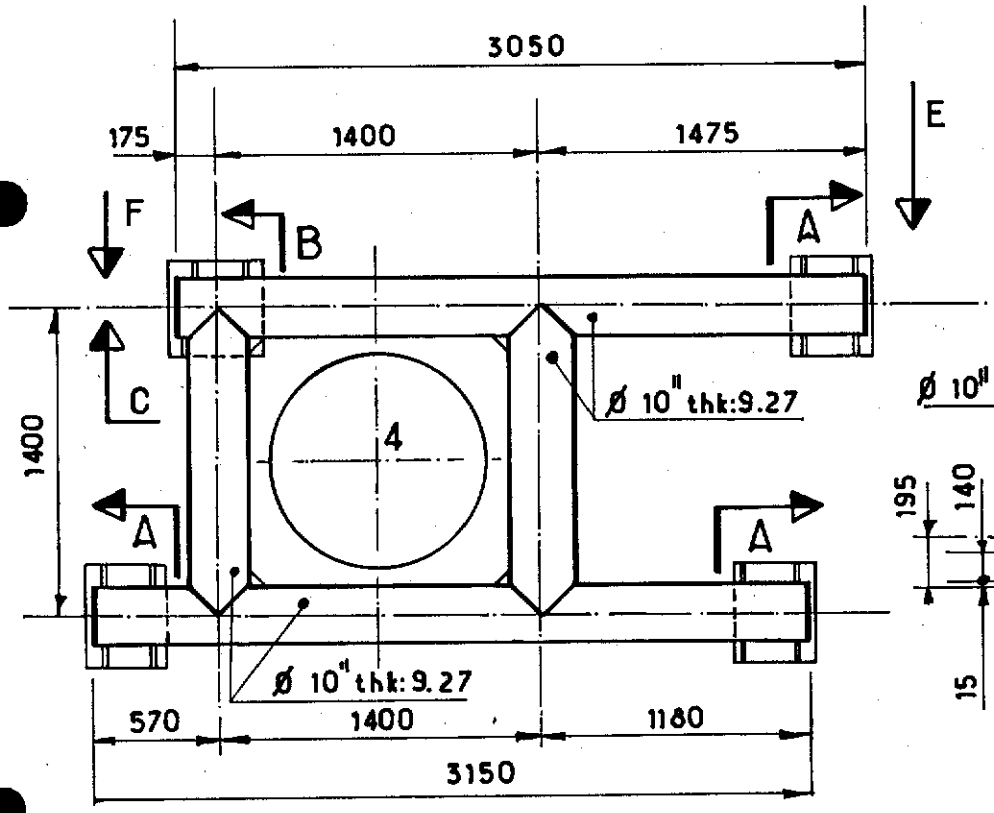

PLAN VIEW

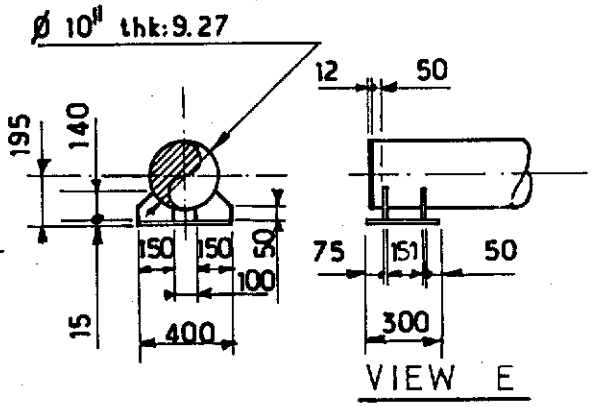

VIEW E

SECTION A

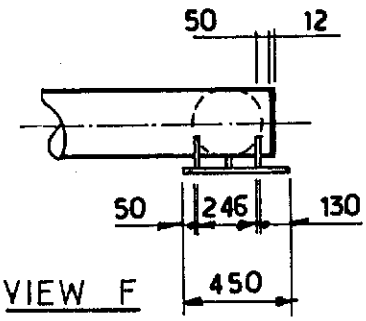

VIEW F

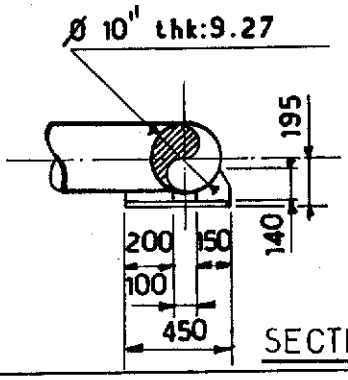

SECTION B

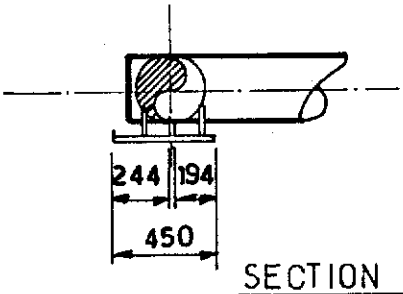

SECTION C

NOTES

FOR LOCATION SEE SK FF.91.36.35.1355
FOR CONDUCTOR SLEEVE SEE SK FF.91.36.35.1491

Rev.	Date	DESCRIPTION	by	app.
1	12.83	UP DATED	B.V.H	JLC

Contractor JVD 1029_40.30

elf aquitaine norge a/s
p.o.box 168
4001 Stavanger

elf
FRIGG FIELD

Job no.	Installation	System
	CDP 1	UNDERWATER
Scale 1:33	CONDUCTOR GUIDE N°4 CELL D SECONDARY FRAME LEVEL G	
Dwgr. no FF. 91. 36. 35. 1360.	1	

CDP 1 AS BUILT DRAWINGS

REFERENCE DRAWING LIST FOR:

ORIGINATOR	CONSTRUCTION DRAWING REF.	TITLE	Rev	Sheet	Size
C.G. DORIS	A1. MP. QF. 1086	SECONDARY FRAME FOR	2		A1.
		RULING OF THE CONDUCTORS			
		SELEEVE ZONE D.			

ELF DRAWING NUMBER	REVISION Index	REVISION Date	TITLE

Rev.	Date	DESCRIPTION	by	app.

Contractor

elf aquitaine norge a/s
p.o.box 168
4001 Stavanger

elf
FRIGG FIELD

Job no.	Installation	System
	CDP 1	UNDERWATER
Scale		
Dwgr. no. FF ___ ___ 1360	Rev	Sheet /

Form 100 318

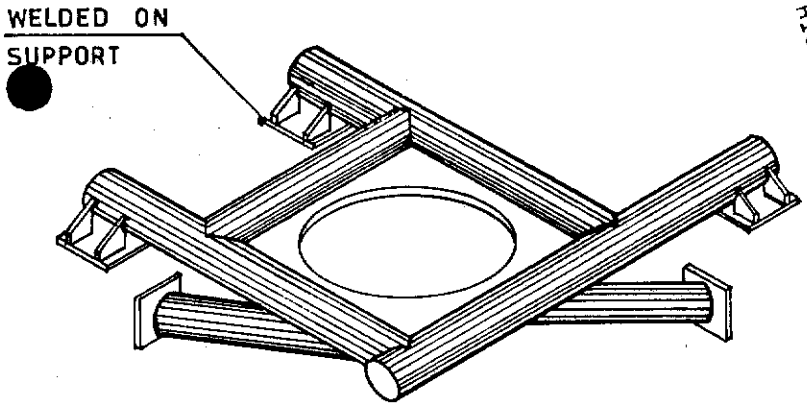

CONDUCTOR GUIDE N°5

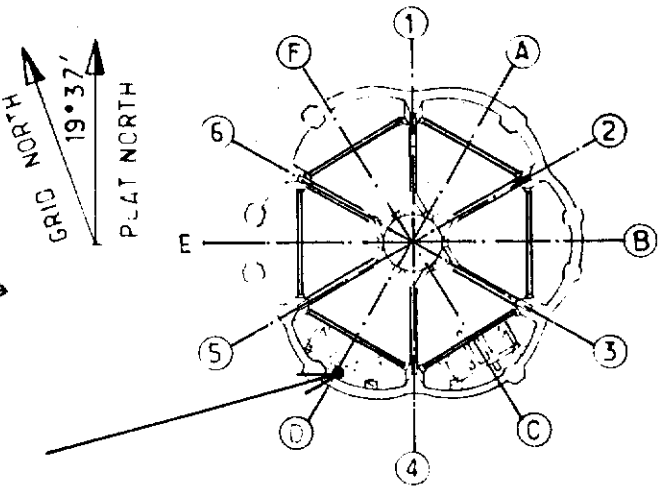

KEY PLAN

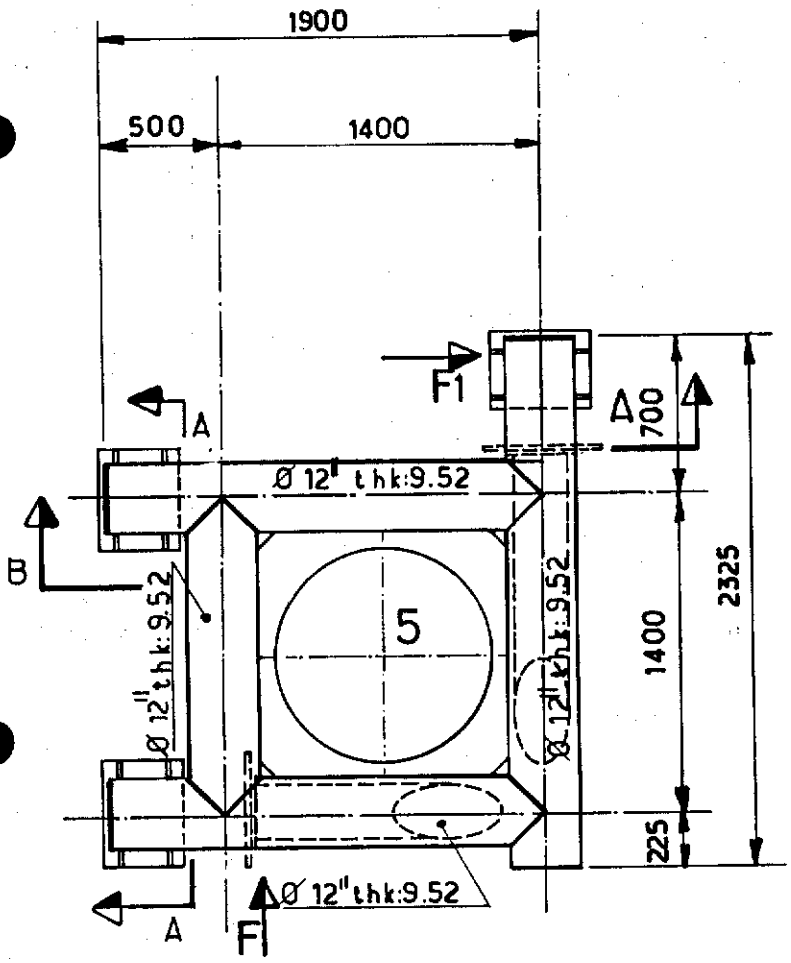

PLAN VIEW

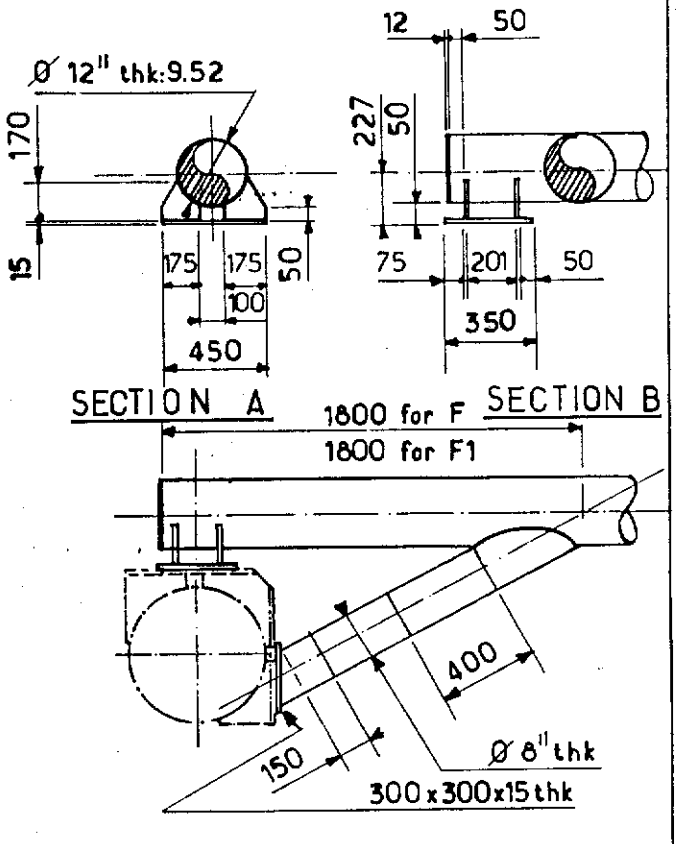

VIEW F AND F1

NOTES

FOR LOCATION SEE SK FF. 91.36.35.1355
FOR CONDUCTOR SLEEVE SEE SK FF. 91.36.35.1491

Rev.	Date	DESCRIPTION	by	app.
1	12.83	UP DATED	BVH	J.L.C

Contractor JVD 1029_40.31

elf aquitaine norge a/s
p.o.box 168
4001 Stavanger

elf
FRIGG FIELD

Job no.	Installation	System
	CDP 1	UNDERWATER
Scale 1:33	CONDUCTOR GUIDE N°5 CELL D SECONDARY FRAME LEVEL G	
Dwgr. no FF_91_36_35_1361.	Rev. 1	Sheet /

CDP 1 AS BUILT DRAWINGS

REFERENCE DRAWING LIST FOR:

ORIGINATOR	CONSTRUCTION DRAWING REF.	TITLE	Rev	Sheet	Size
C.G. DORIS	A1. MP. QF. 1088	SECONDARY FRAME FOR	1		A1
		RULING OF THE CONDUCTORS			
		SELEEVE ZONE D.			

ELF DRAWING NUMBER	REVISION Index	REVISION Date	TITLE

Rev.	Date	DESCRIPTION	by	app.

Contractor

elf aquitaine norge a/s
p.o.box 168
4001 Stavanger

elf

FRIGG FIELD

Job no.	Installation	System
	CDP 1	UNDERWATER
Scale		
Dwgr. no. FF ___ ___ 1361	Rev	Sheet /

Form 100 318

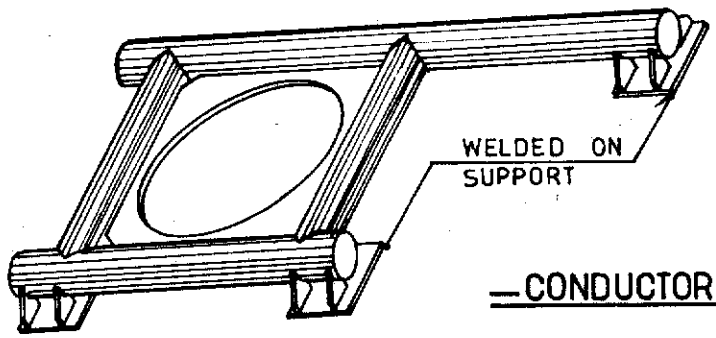

CONDUCTOR GUIDE N°6

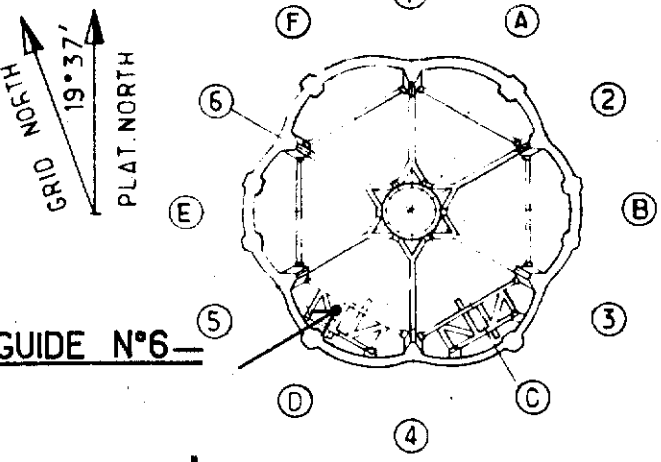

KEY PLAN

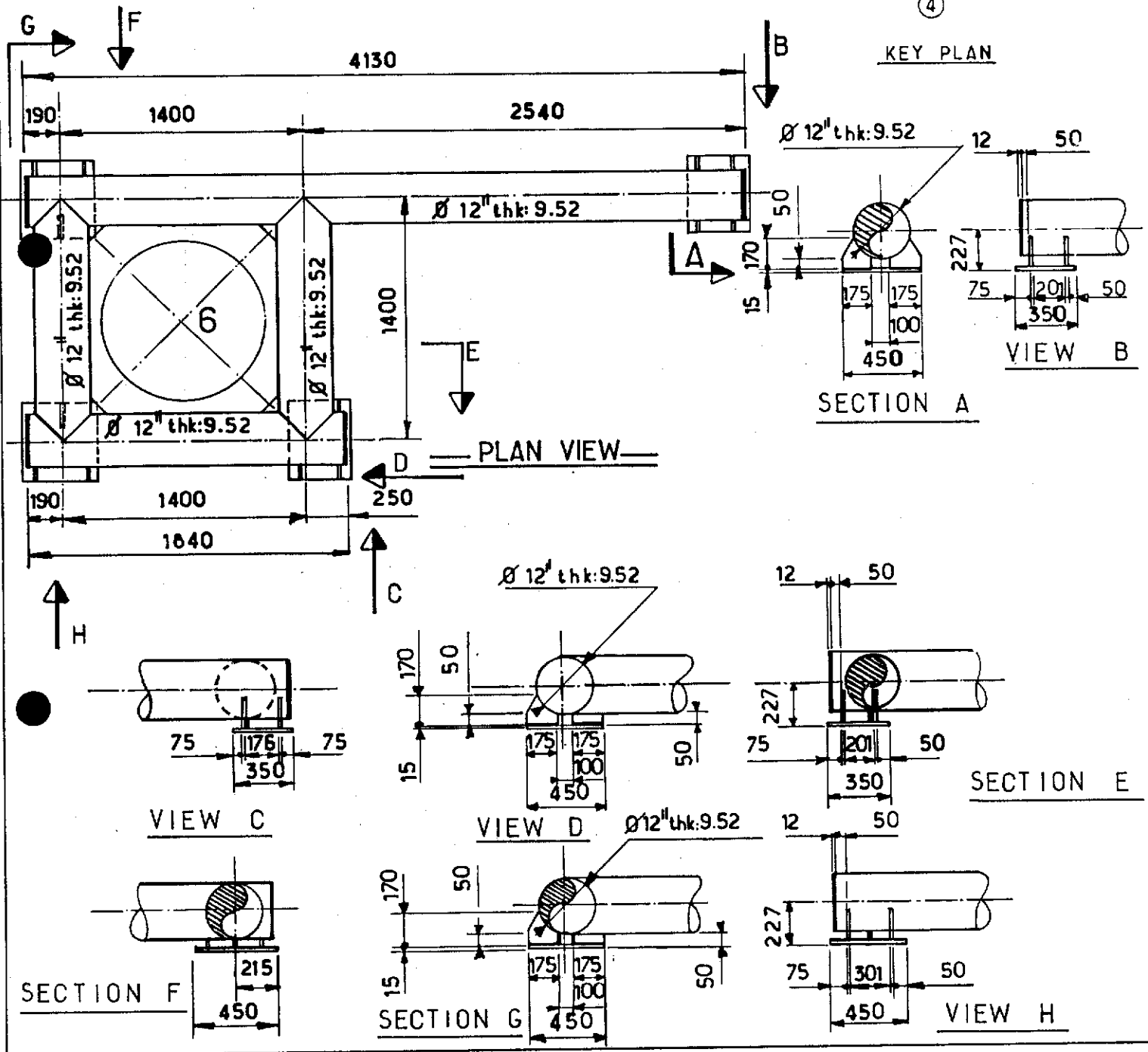

PLAN VIEW

SECTION A

VIEW B

VIEW C

VIEW D

SECTION E

SECTION F

SECTION G

VIEW H

NOTES FOR LOCATION SEE SK FF.91.36.35.1355
FOR CONDUCTOR SLEEVE SEE SK FF.91.36.35.1491

Rev.	Date	DESCRIPTION	by	app.
1	12.83	UP DATED	B.V.H	J.L.C

Contractor JVD 1029_40.32

elf aquitaine norge a/s
p.o.box 168
4001 Stavanger

elf
FRIGG FIELD

Job no.	Installation	System
	CDP 1	UNDERWATER
Scale 1:33	CONDUCTOR GUIDE N°6 CELL D SECONDARY FRAME LEVEL G	
Dwgr. no. FF 91_36_35_1362.	Rev. 1	Sheet /

CDP 1 AS BUILT DRAWINGS

REFERENCE DRAWING LIST FOR:

ORIGINATOR	CONSTRUCTION DRAWING REF.	TITLE	Rev	Sheet	Size
C.G. DORIS	AI.MP. QF. 1085	SECONDARY FRAME FOR	1		A1
		RULING OF THE CONDUCTORS			
		SELEEVE ZONE D.			

ELF DRAWING NUMBER	REVISION Index	REVISION Date	TITLE

Rev.	Date	DESCRIPTION	by	app.

Contractor

elf aquitaine norge a/s
p.o.box 168
4001 Stavanger

elf

FRIGG FIELD

Job no.	Installation	System
	CDP 1	UNDERWATER
Scale		
Dwgr. no. FF ___ ___ 1362	Rev	Sheet /

Form 100 318

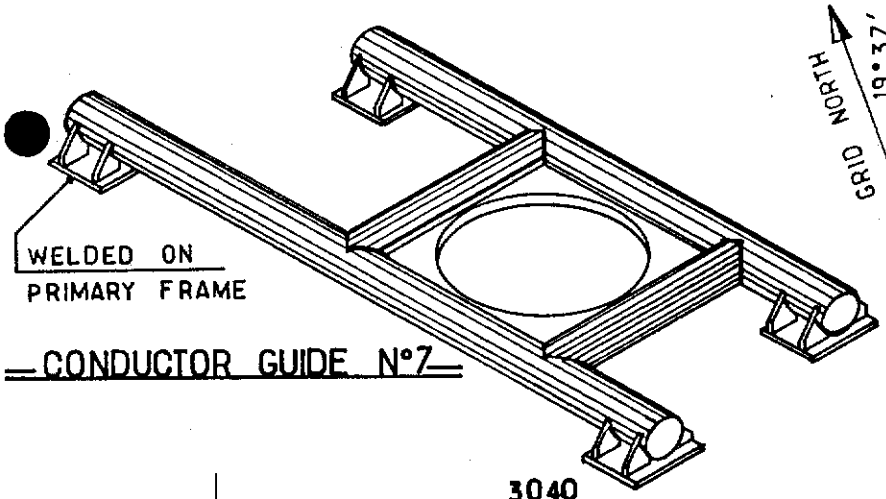

CONDUCTOR GUIDE N°7

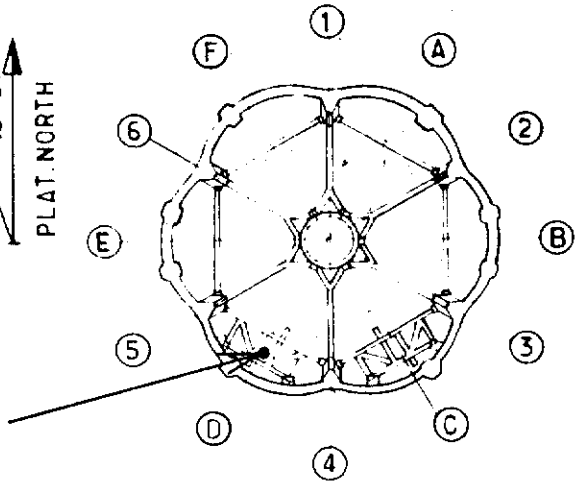

KEY PLAN

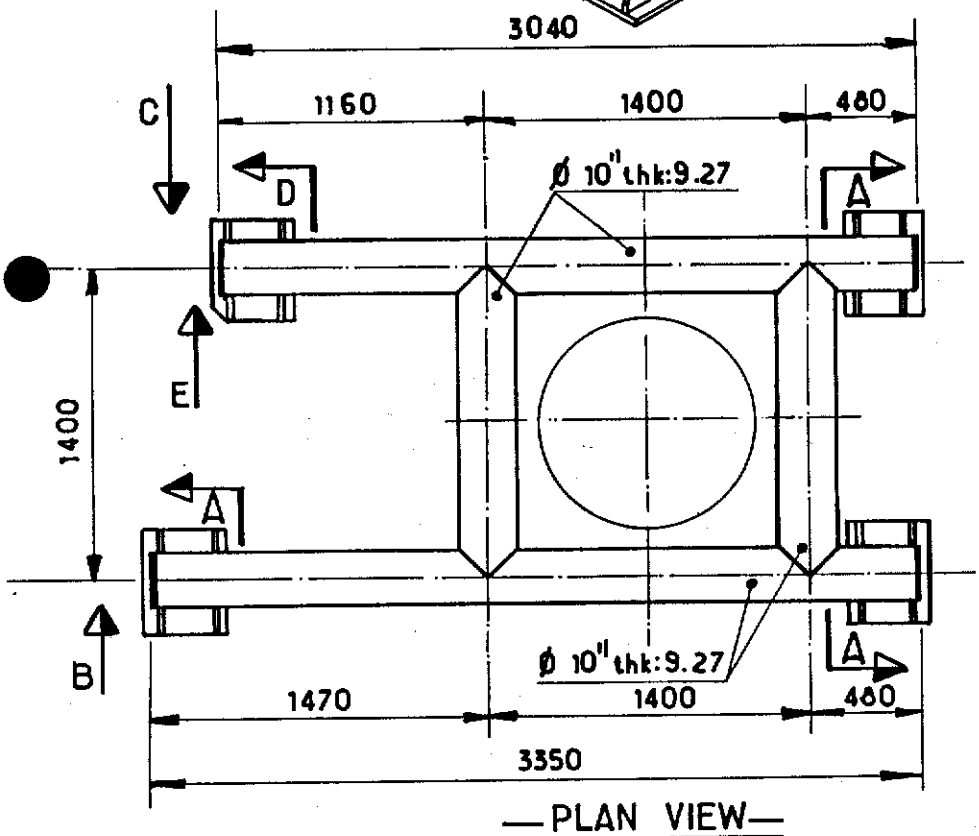

PLAN VIEW

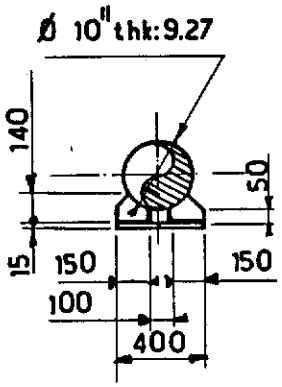

SECTION A

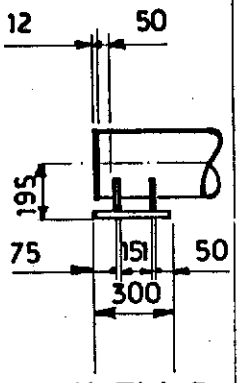

VIEW B

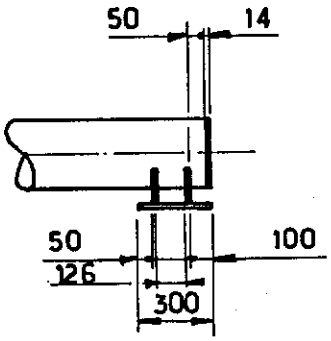

VIEW C

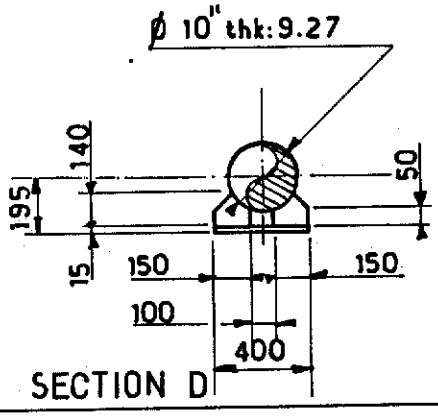

SECTION D

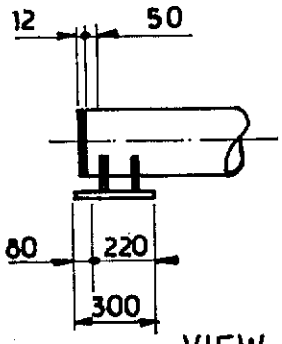

VIEW E

NOTES
FOR LOCATION SEE SK FF.91.36.35 - 1355
FOR CONDUCTOR SLEEVE SEE SK FF - 91-36-35-1491

Rev.	Date	DESCRIPTION	by	app.
1	12.83	UP DATED	BVH	JLC

Contractor JVD 1029_40.33

elf aquitaine norge a/s
p.o.box 168
4001 Stavanger

elf
FRIGG FIELD

Job no.	Installation	System
	CDP 1	UNDERWATER
Scale 1:33	CONDUCTOR GUIDE N°7 CELL D SECONDARY FRAME LEVEL G	
Dwgr. no. FF_91_36_35_1363.	1	

CDP 1 AS BUILT DRAWINGS

REFERENCE DRAWING LIST FOR:

ORIGINATOR	CONSTRUCTION DRAWING REF.	TITLE	Rev	Sheet	Size
C.G. DORIS	A1. HP. QF 1087	SECONDARY FRAME FOR	2		A1
		RULING OF THE CONDUCTORS			
		SELEEVE ZONE D.			

ELF DRAWING NUMBER	REVISION Index	REVISION Date	TITLE

Rev.	Date	DESCRIPTION	by	app.

Contractor

elf aquitaine norge a/s
p.o.box 168
4001 Stavanger

elf

FRIGG FIELD

Job no.	Installation CDP 1	System UNDERWATER
Scale		
Dwgr. no. FF ___ ___ 1363	Rev	Sheet /

Form 100 318

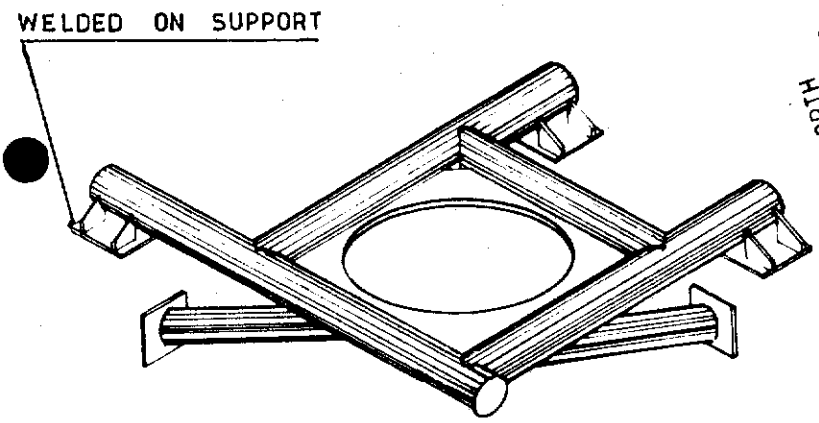

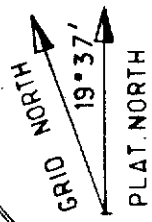

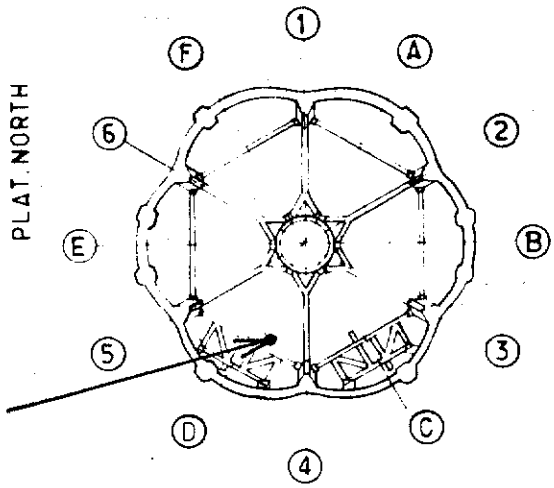

KEY PLAN

CONDUCTOR GUIDE N°8

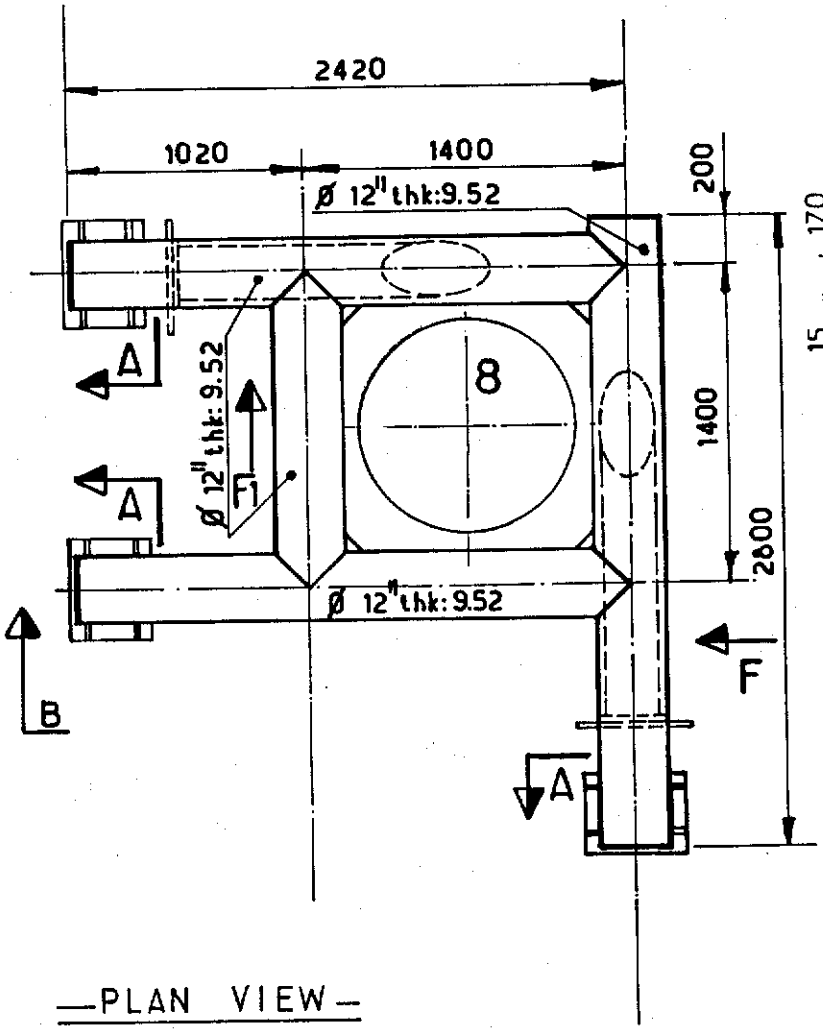

PLAN VIEW

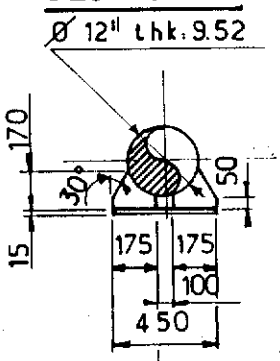

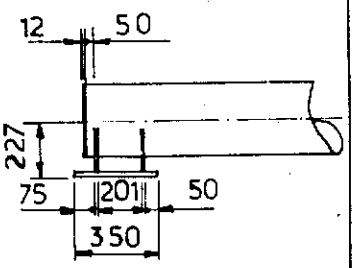

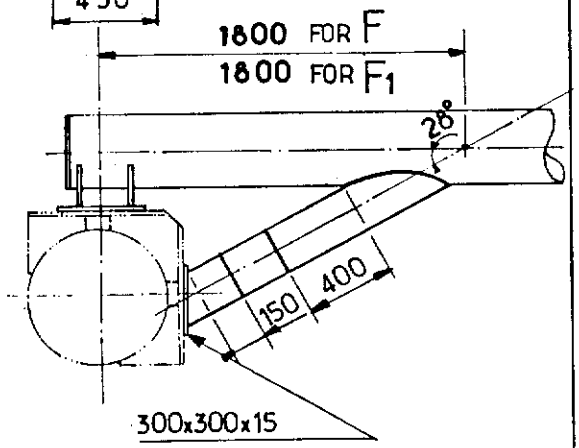

VIEW F AND F1

NOTES

FOR LOCATION SEE SK. FF.91.36.35.1355.
FOR CONDUCTOR SLEEVE SEE SK. FF.91.36.35.1491.

Rev.	Date	DESCRIPTION	by	app.
1	12,83	UP DATED	BVH	JJC

Contractor JVD 1029_40.34

elf aquitaine norge a/s
p.o.box 168
4001 Stavanger

elf
FRIGG FIELD

Job no.	Installation	System
	CDP 1	UNDERWATER
Scale 1:33	CONDUCTOR GUIDE N°8 CELL D SECONDARY FRAME LEVEL G	
Dwgr. no FF.91.36.35.1364.	Rev. 1	Sheet /

CDP 1 AS BUILT DRAWINGS

REFERENCE DRAWING LIST FOR:

ORIGINATOR	CONSTRUCTION DRAWING REF.	TITLE	Rev	Sheet	Size
C.G. DORIS	A1. MP. QF. 1089	SECONDARY FRAME FOR	1		A1.
		RULING OF THE CONDUCTORS			
		SELEEVE ZONE D.			

ELF DRAWING NUMBER	REVISION Index	REVISION Date	TITLE

Rev.	Date	DESCRIPTION	by	app.

Contractor

elf aquitaine norge a/s
p.o.box 168
4001 Stavanger

elf

FRIGG FIELD

Job no.	Installation	System
	CDP 1	UNDERWATER
Scale		
Dwgr. no. FF ___ ___ 1364	Rev	Sheet /

Form 1(2) TLL

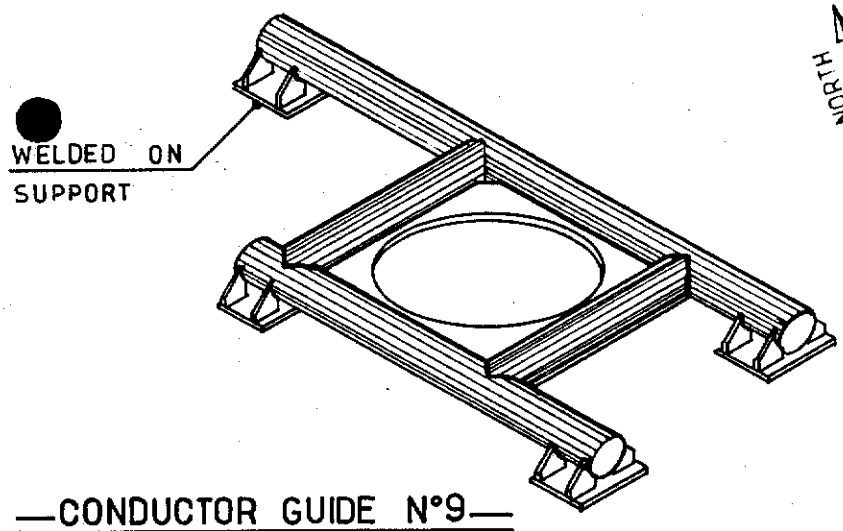

CONDUCTOR GUIDE N°9

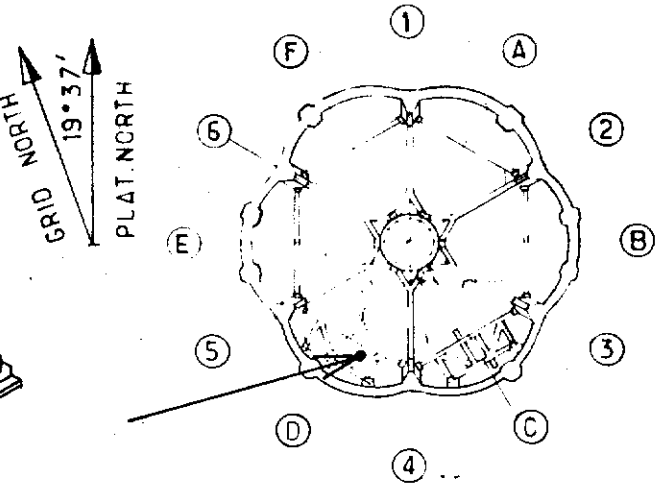

KEY PLAN

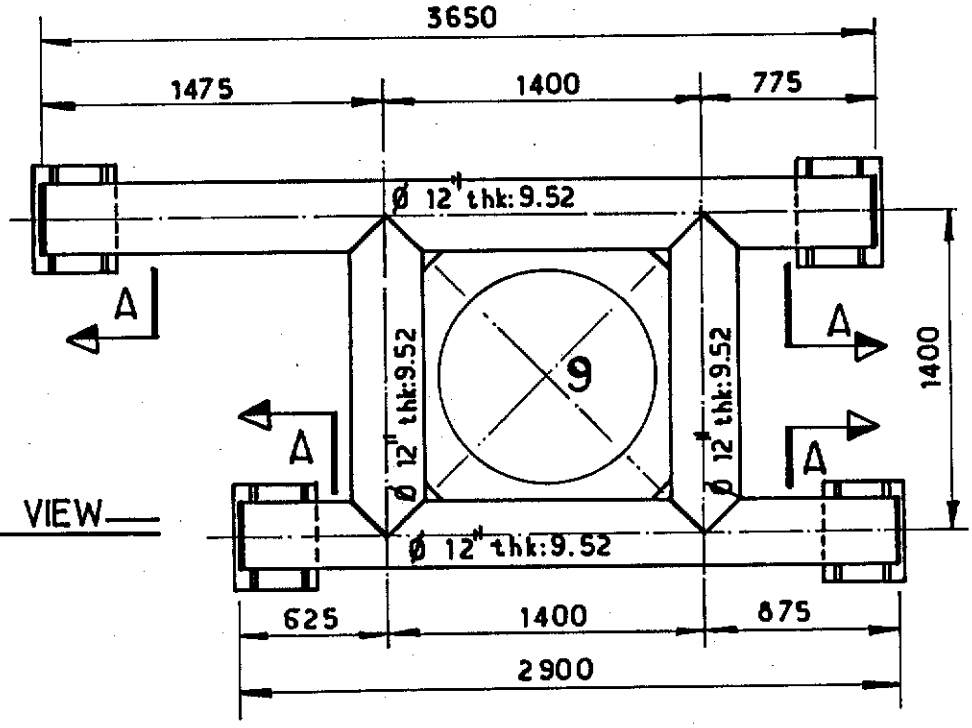

PLAN VIEW

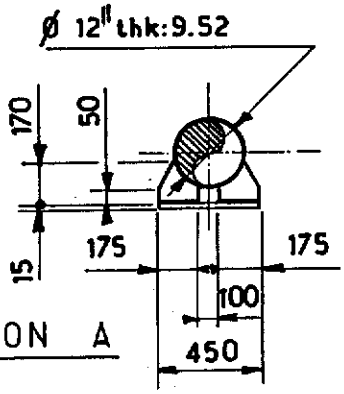

SECTION A

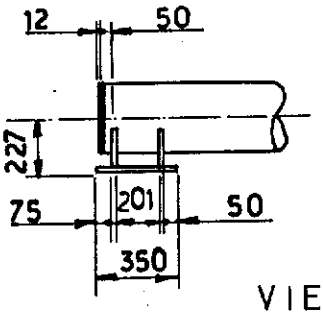

VIEW B

NOTES
FOR LOCATION SEE SK FF.91.36.35.1355.
FOR CONDUCTOR SLEEVE SEE SK FF.91.36.35.1491.

Rev.	Date	DESCRIPTION	by	app.
1	12.83	UP DATED	BVH	J.C

Contractor JVD 1029_40.35

elf aquitaine norge a/s
p.o.box 168
4001 Stavanger

elf
FRIGG FIELD

Job no.	Installation	System
	CDP 1	UNDERWATER
Scale 1:33	CONDUCTOR GUIDE N°9 CELL D SECONDARY FRAME LEVEL G	
Dwgr. no FF 91 36 35 1365	1	

CDP 1 AS BUILT DRAWINGS

REFERENCE DRAWING LIST FOR:

ORIGINATOR	CONSTRUCTION DRAWING REF.	TITLE	Rev	Sheet	Size
C.G. DORIS	AI. MP. QF. 1090	SECONDARY FRAME FOR	1		A1.
		RULING OF THE CONDUCTORS			
		SELEEVE ZONE D.			

ELF DRAWING NUMBER	REVISION Index	REVISION Date	TITLE

Rev.	Date	DESCRIPTION	by	app.

Contractor

elf aquitaine norge a/s
p.o.box 168
4001 Stavanger

elf

FRIGG FIELD

Job no.	Installation	System
	CDP 1	UNDERWATER
Scale		
Dwgr. no. FF ___ ___ 1365	Rev	Sheet /

Form 100 318

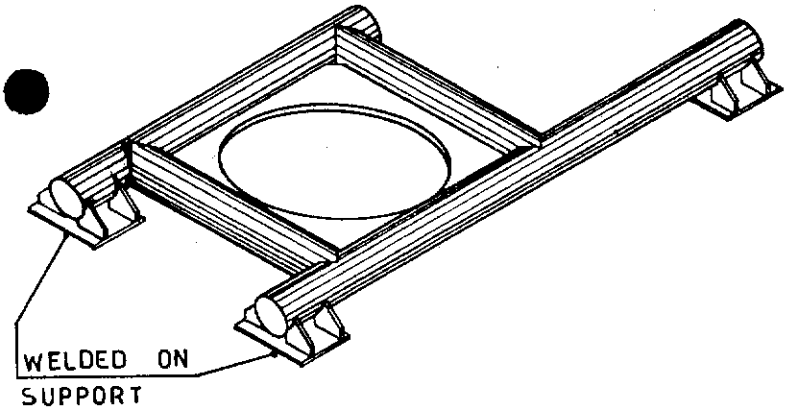

GRID NORTH 19°37' PLAT. NORTH

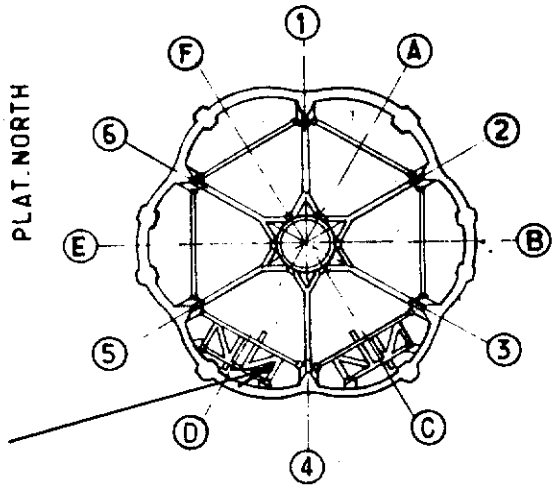

KEY PLAN

CONDUCTOR GUIDE N°10

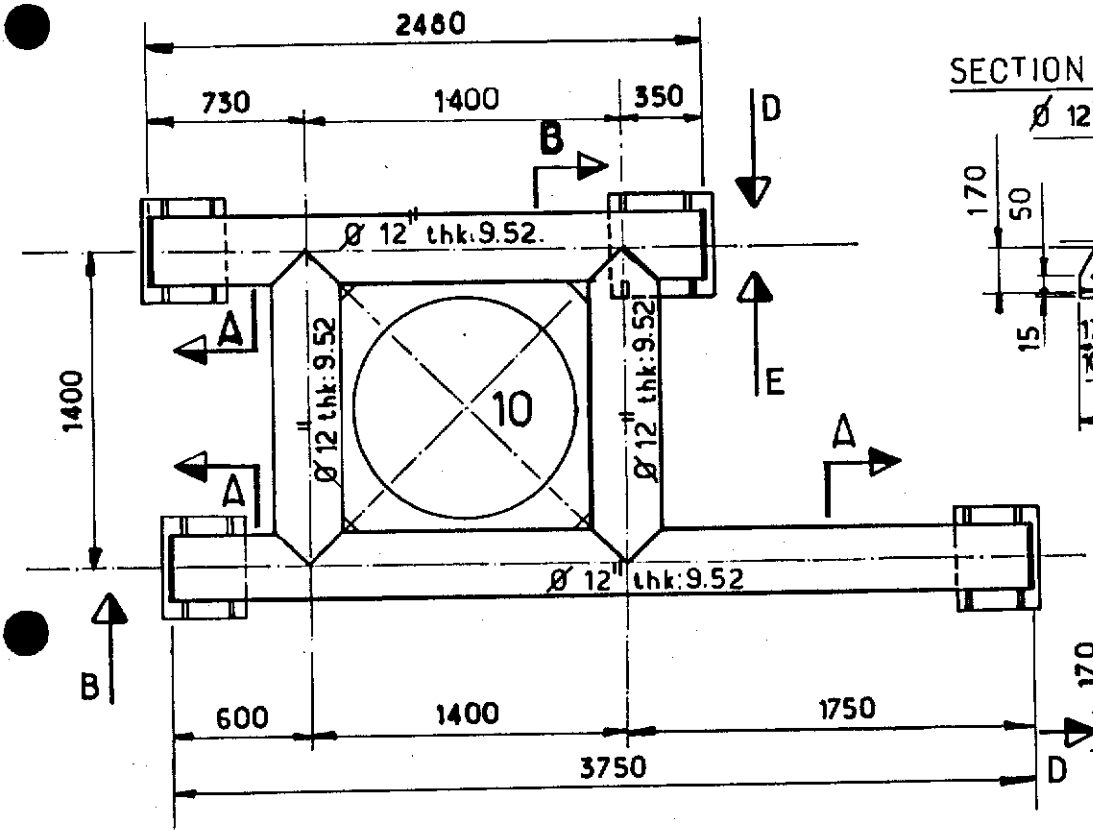

PLAN VIEW

SECTION A

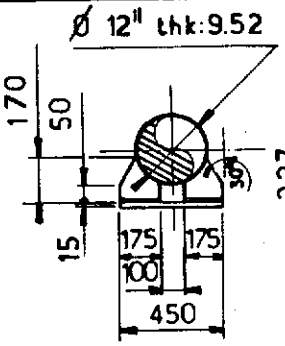

VIEW B

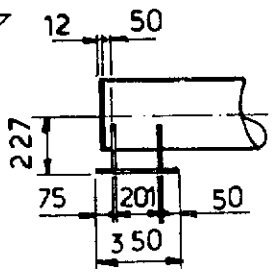

SECTION C

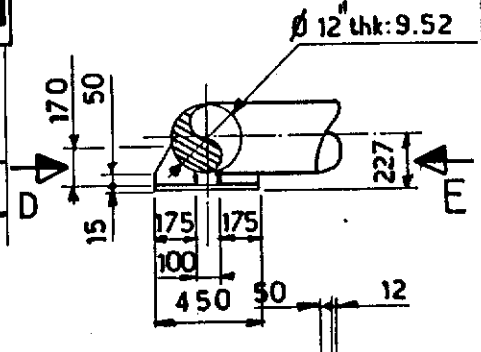

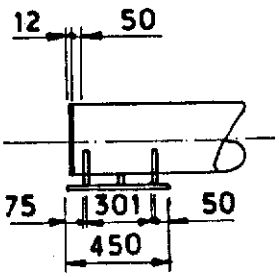

VIEW D

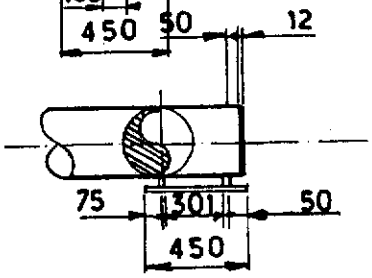

SECTION E

NOTES

FOR LOCATION SEE SK FF.91.36.35.1355.
FOR CONDUCTOR SLEEVE SEE SK FF.91.36.35.1491.

Rev.	Date	DESCRIPTION	by	app.
1	12.83	UP DATED	BVH	J.LC

Contractor JVD 1029-40.36

elf aquitaine norge a/s
p.o.box 168
4001 Stavanger

elf
FRIGG FIELD

Job no.	Installation	System
	CDP 1	UNDERWATER
Scale 1:33	CONDUCTOR GUIDE N° 10 CELL D SECONDARY FRAME LEVEL G	
Dwgr. no. FF.91.36.35.1366.	Rev. 1	Sheet /

Form 100.318

CDP 1 AS BUILT DRAWINGS

REFERENCE DRAWING LIST FOR:

ORIGINATOR	CONSTRUCTION DRAWING REF.	TITLE	Rev	Sheet	Size
C.G. DORIS	A1. MP. QF. 1092	SECONDARY FRAME FOR	1		A1.
		RULING OF THE CONDUCTOR			
		SELEEVE ZONE D.			

ELF DRAWING NUMBER	REVISION Index	REVISION Date	TITLE

Rev.	Date	DESCRIPTION	by	app.

Contractor

elf aquitaine norge a/s
p.o.box 168
4001 Stavanger

elf

FRIGG FIELD

Job no.	Installation CDP 1	System UNDERWATER
Scale		
Dwgr. no. FF 1366	Rev	Sheet 1

CONDUCTOR GUIDE N°11

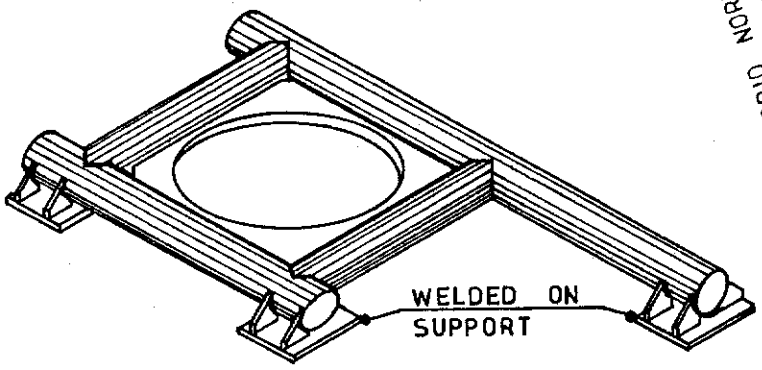

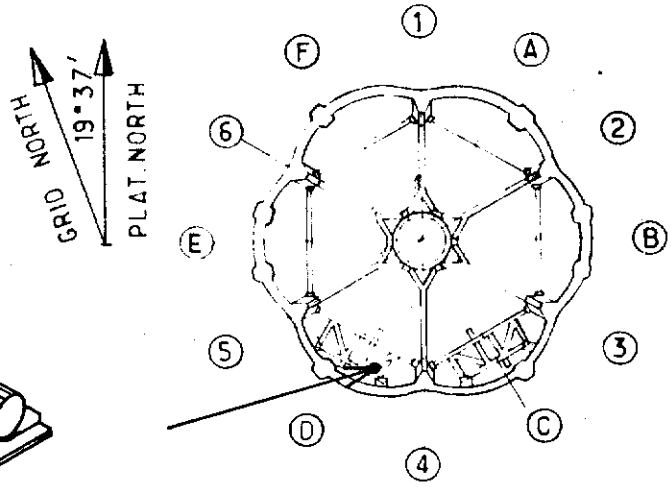

KEY PLAN

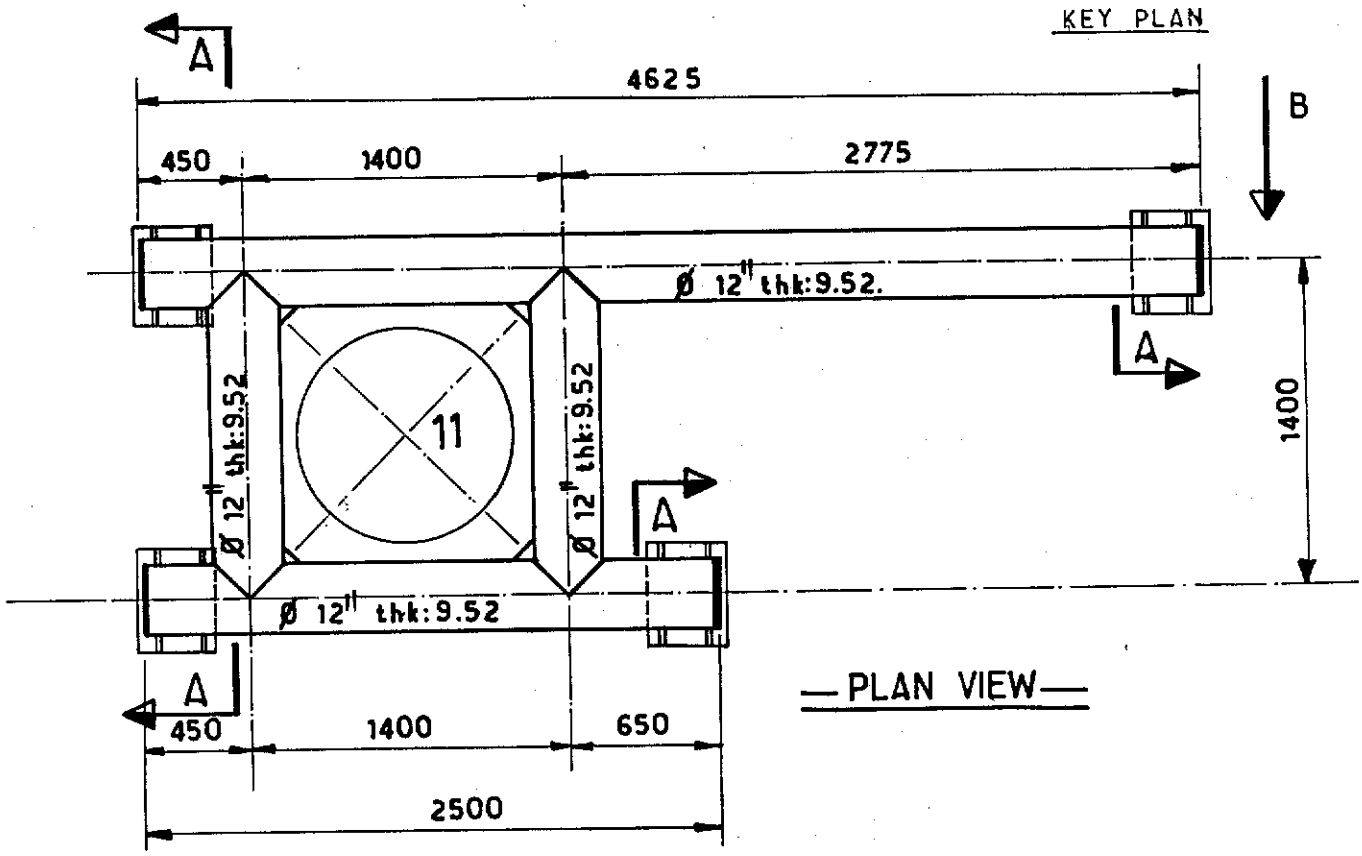

PLAN VIEW

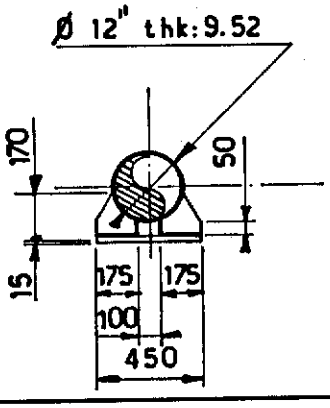

SECTION A

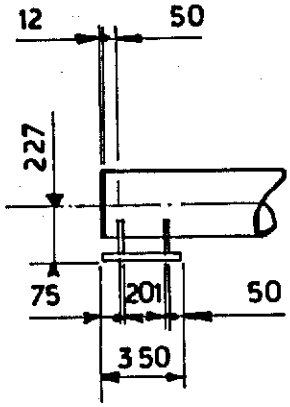

VIEW B

NOTES

FOR LOCATION SEE SK FF-91.36.35.1355.
FOR CONDUCTOR SLEEVE SEE SK FF-91.36.35.1491.

Rev.	Date	DESCRIPTION	by	app.
1	12,83	UP DATED	B.VH	J.LC

Contractor JVD 1029_40.37

elf aquitaine norge a/s
p.o.box 168
4001 Stavanger

elf
FRIGG FIELD

Job no.	Installation	System
	CDP 1	UNDERWATER
Scale 1:33	CONDUCTOR GUIDE N°11 CELL D SECONDARY FRAME LEVEL G	
Dwgr. no. FF 91 36 35 1367	1	

CDP 1 AS BUILT DRAWINGS

REFERENCE DRAWING LIST FOR:

ORIGINATOR	CONSTRUCTION DRAWING REF.	TITLE	Rev	Sheet	Size
C.G. DORIS	A1. MP. QF. 1093	SECONDARY FRAME FOR	1		A1.
		RULING OF THE CONDUCTORS			
		SELEEVE ZONE D.			

ELF DRAWING NUMBER	REVISION Index	REVISION Date	TITLE

Rev.	Date	DESCRIPTION	by	app.

Contractor

elf aquitaine norge a/s
p.o.box 168
4001 Stavanger

elf

FRIGG FIELD

Job no.	Installation	System
	CDP 1	UNDERWATER
Scale		
Dwgr. no. FF ___ ___ 1367	Rev	Sheet /

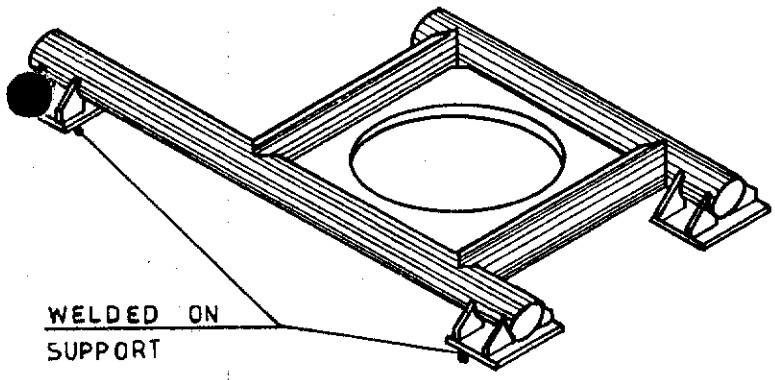

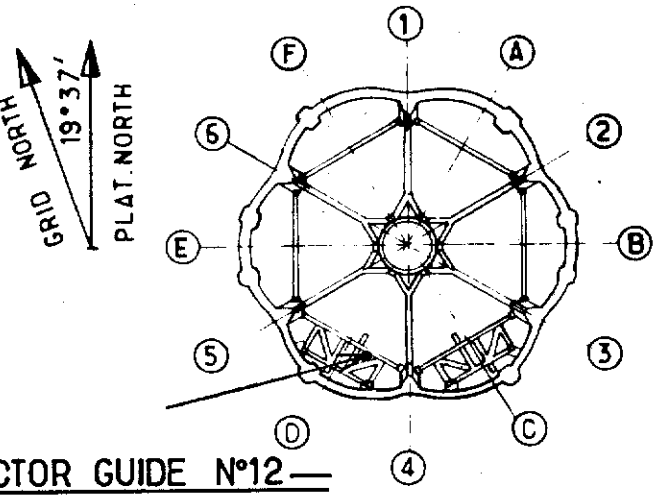

— CONDUCTOR GUIDE N°12 —

KEY PLAN

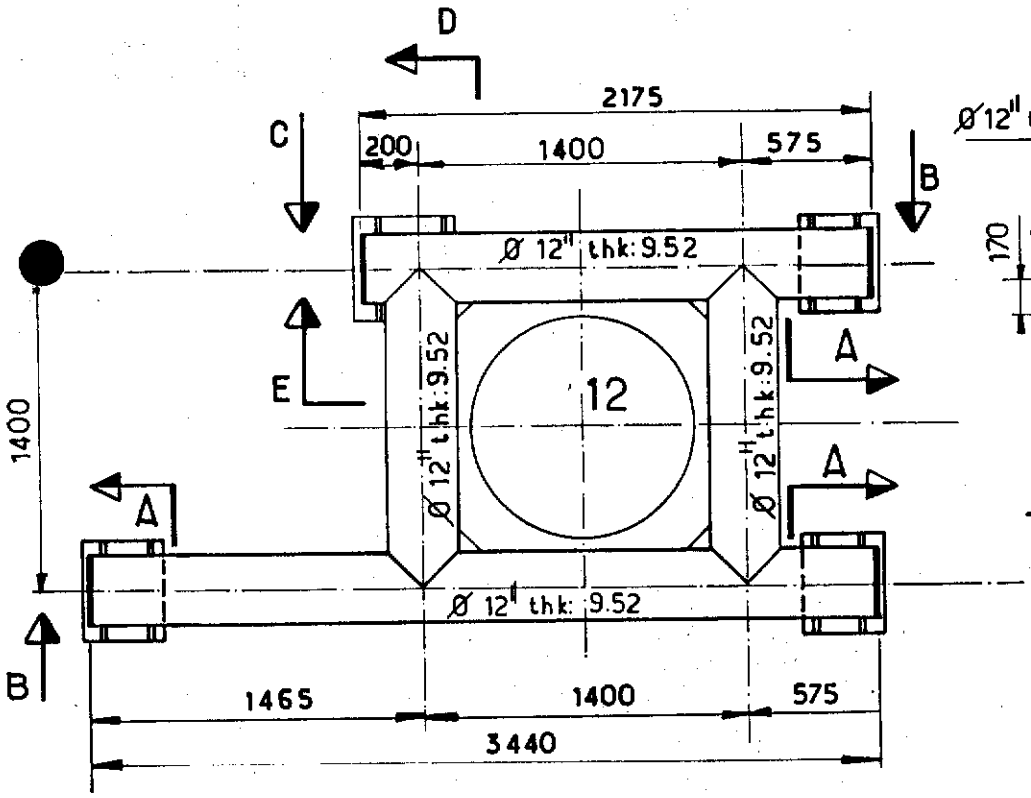

—PLAN VIEW—

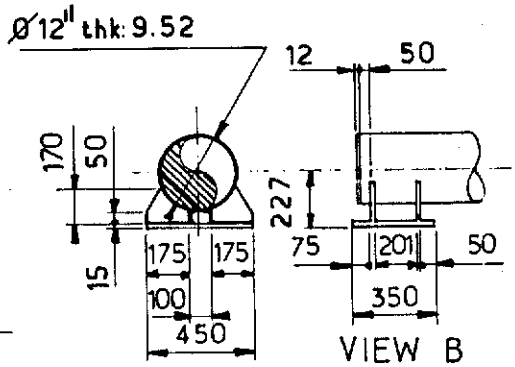

SECTION A

VIEW B

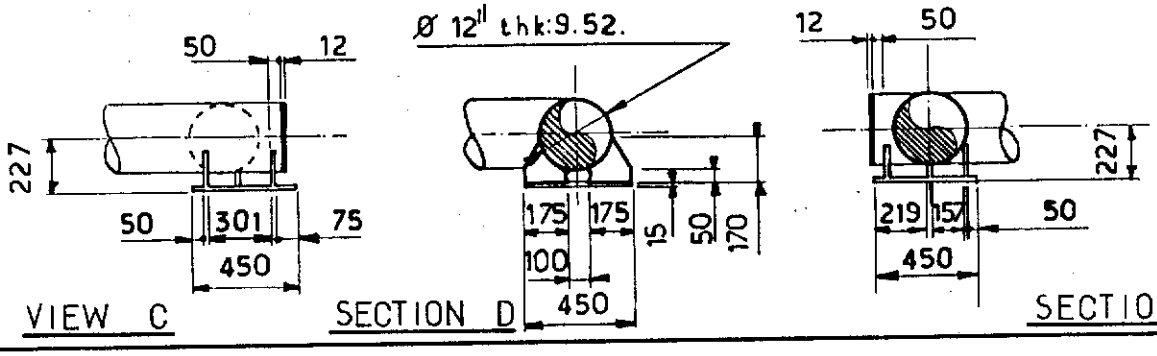

VIEW C

SECTION D

SECTION E

NOTES

FOR LOCATION SEE SK FF-91.36.35-1355.
FOR CONDUCTOR SLEEVE SEE SK FF-91.36.35-1491.

Rev.	Date	DESCRIPTION	by	app.
1	1283	UP DATED	BVH	JLC

Contractor JVD 1029_40.38

elf aquitaine norge a/s
p.o.box 168
4001 Stavanger

elf
FRIGG FIELD

Job no.	Installation	System
	CDP 1	UNDERWATER
Scale 1:33	CONDUCTOR GUIDE N°12 CELL D SECONDARY FRAME LEVEL G	
Dwgr. no. FF 91.36.35.1368.	Rev 1	Sheet /

Form 100 318

CDP 1 AS BUILT DRAWINGS

REFERENCE DRAWING LIST FOR:

ORIGINATOR	CONSTRUCTION DRAWING REF.	TITLE	Rev	Sheet	Size
C.G. DORIS	A1. MP. QF.1091	SECONDARY FRAME FOR	1		A1.
		RULING OF THE CONDUCTORS			
		SELEEVE ZONE D.			

ELF DRAWING NUMBER	REVISION Index	REVISION Date	TITLE

Rev.	Date	DESCRIPTION	by	app.

Contractor

elf aquitaine norge a/s
p.o.box 168
4001 Stavanger

elf

FRIGG FIELD

Job no.	Installation	System
	CDP 1	UNDERWATER
Scale		
Dwgr. no. FF 1368	Rev	Sheet /

Form 100 318

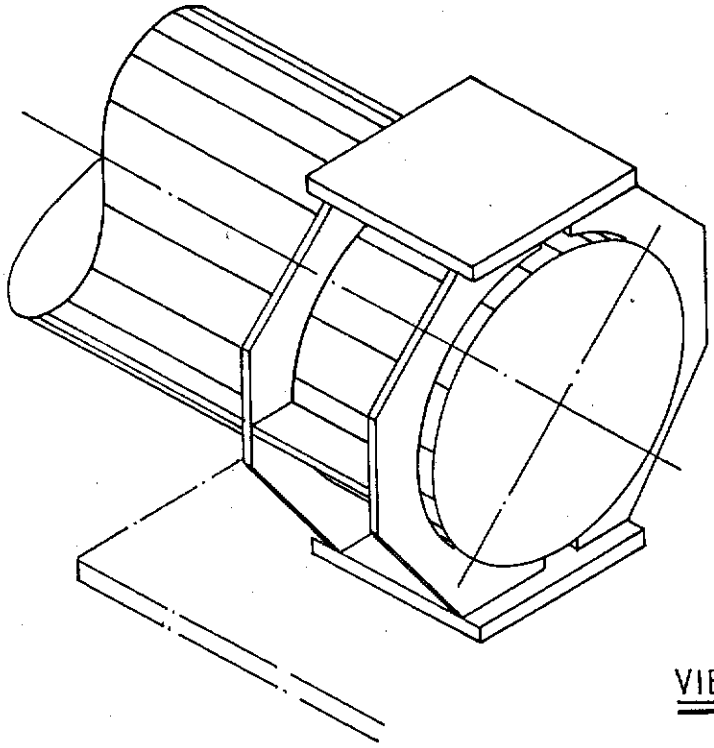

VIEW F

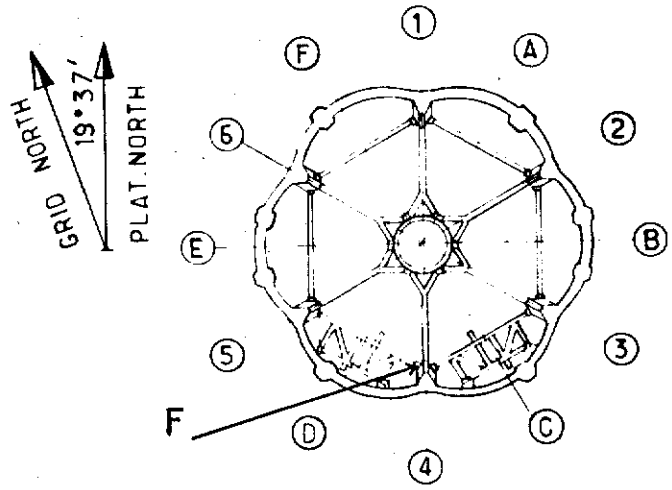

KEY PLAN

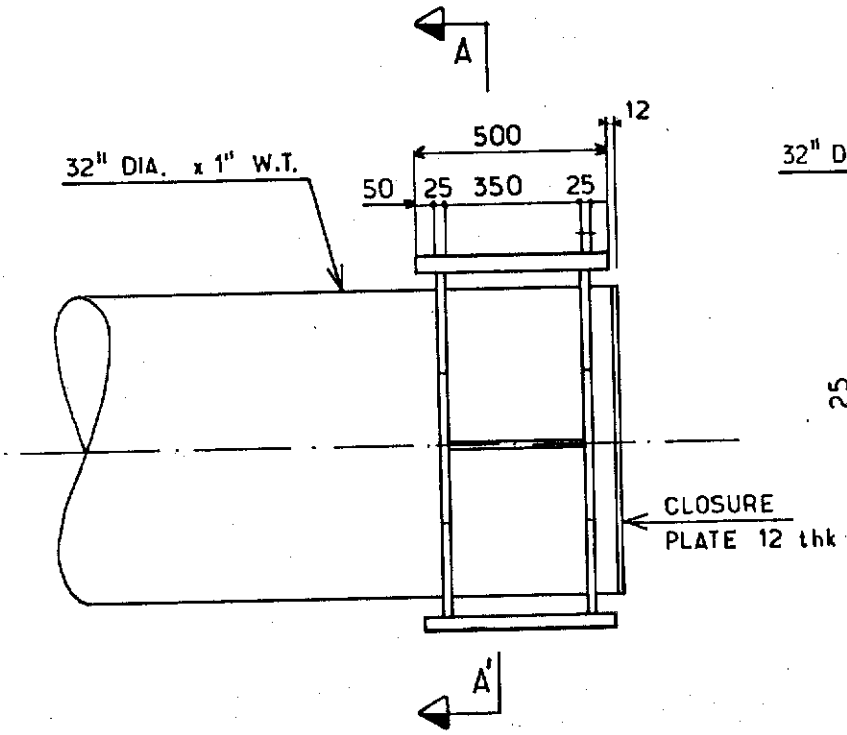

SECTION AA'

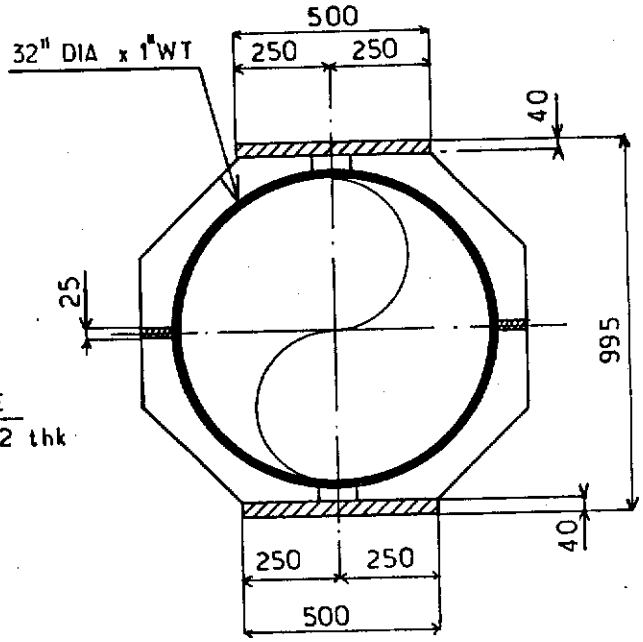

NOTES

FOR LOCATION SEE SK FF. 91. 36.35.1355.
FOR BOX FOR FREE LOCK SEE SK FF. 91.36.35.1371.

Rev.	Date	DESCRIPTION	by	app.
1.	12.83	UP DATED	BVH	JLC

Contractor JVD 1029_40_39_

elf aquitaine norge a/s
p.o.box 168
4001 Stavanger

elf
FRIGG FIELD

Job no.	Installation	System
	CDP 1	UNDERWATER
Scale 1:20	FREE LOCK PIPE END GD1 CELL D LEVEL G	
Dwgr. no. FF 91·36·35·1369	No. 1	Sheet /

CDP 1 AS BUILT DRAWINGS

REFERENCE DRAWING LIST FOR:

ORIGINATOR	CONSTRUCTION DRAWING REF.	TITLE	Rev	Sheet	Size
C G. DORIS	A1. MP. QF. 1189	PIPE END OF FREE LOCK	1.		A1
		OF GUIDE FRAME. Ø32			
		CELL D. LEVEL G.			

ELF DRAWING NUMBER	REVISION Index	REVISION Date	TITLE

Rev.	Date	DESCRIPTION	by	app.

Contractor

elf aquitaine norge a/s
p.o.box 168
4001 Stavanger

elf

FRIGG FIELD

Job no.	Installation	System
	CDP 1	UNDERWATER
Scale		
Dwgr. no. FF ___ ___ 1369	Rev	Sheet /

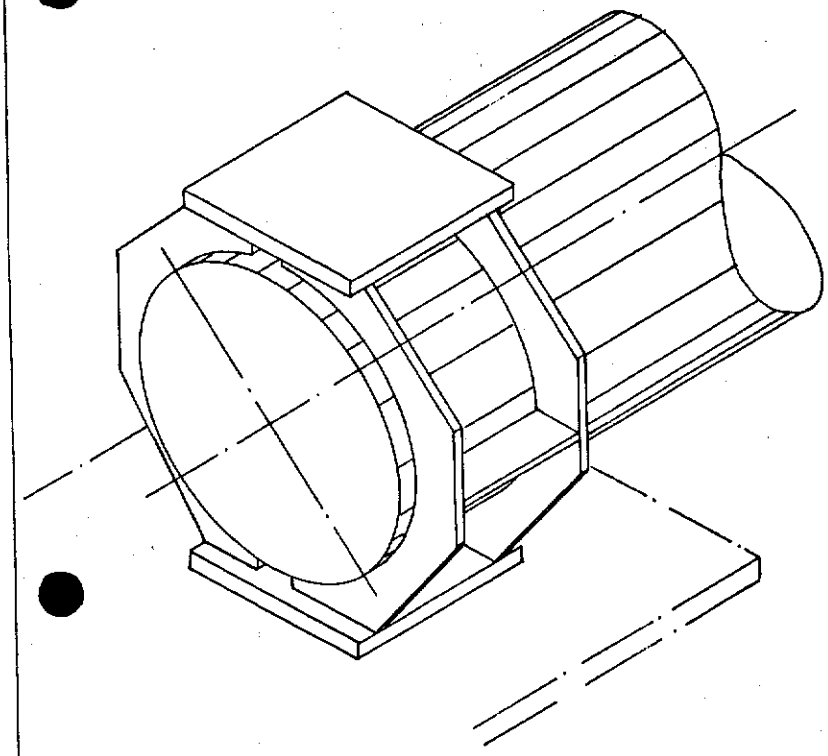

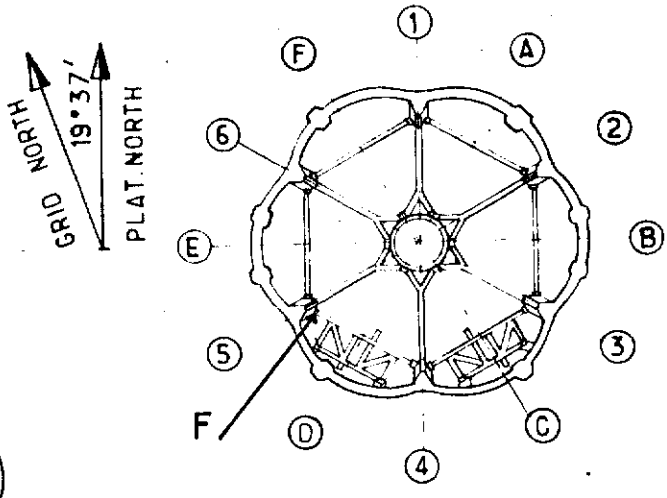

KEY PLAN

VIEW F

SECTION B B'

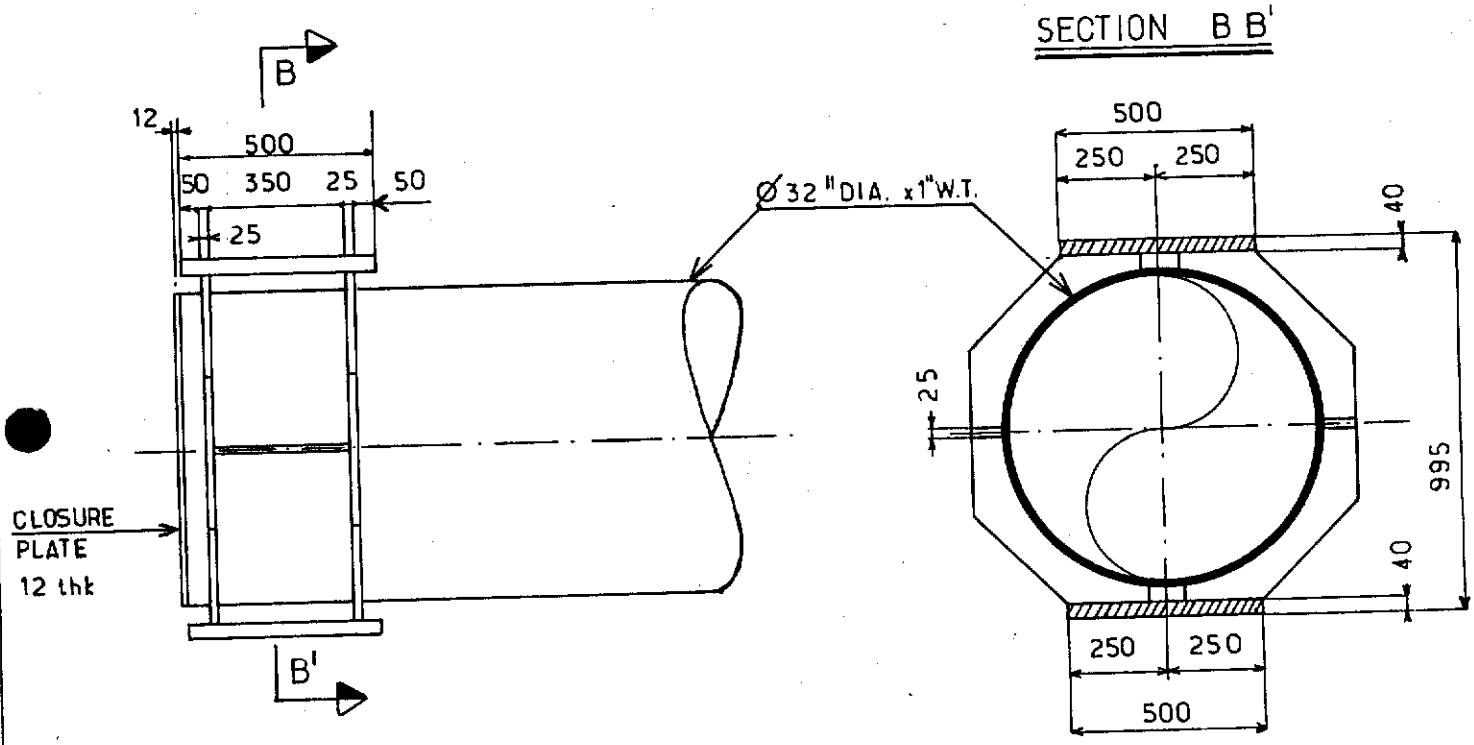

NOTES

FOR LOCATION SEE SK FF. 91.36.35.1355.
FOR BOX FOR FREE LOCK SEE SK FF.91.36.35.1372.

Rev.	Date	DESCRIPTION	by	app.
1	12.83	UP DATED	BVH	J.LC

Contractor JVD 1029.40.40.

elf aquitaine norge a/s
p.o.box 168
4001 Stavanger

elf
FRIGG FIELD

Job no.	Installation	System
	CDP 1	UNDERWATER
Scale 1:20	FREE LOCK PIPE END CELL D LEVEL G	GD4
Dwgr. no. FF 91·36·35·1370	Rev. 1	Sheet

CDP 1 AS BUILT DRAWINGS

REFERENCE DRAWING LIST FOR:

ORIGINATOR	CONSTRUCTION DRAWING REF.	TITLE	Rev	Sheet	Size
C G. DORIS	A1. MP. QF. 1189	PIPE END OF FREE LOCK	1		A1
		OF GUIDE FRAME. Ø32			
		CELL D. LEVEL G.			

ELF DRAWING NUMBER	REVISION Index	REVISION Date	TITLE

Rev.	Date	DESCRIPTION	by	app.

Contractor

elf aquitaine norge a/s
p.o.box 168
4001 Stavanger

elf

FRIGG FIELD

Job no.	Installation	System
	CDP 1	UNDERWATER
Scale		
Dwgr. no. FF 1370	Rev.	Sheet /

Form 100 318

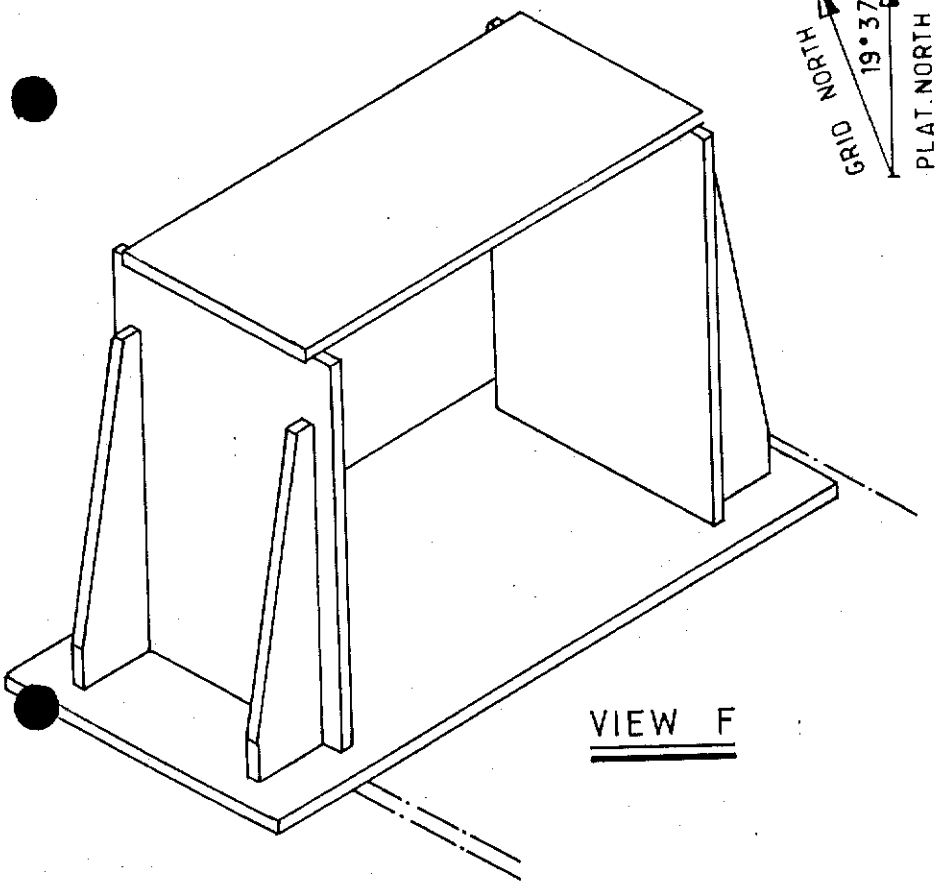

VIEW F

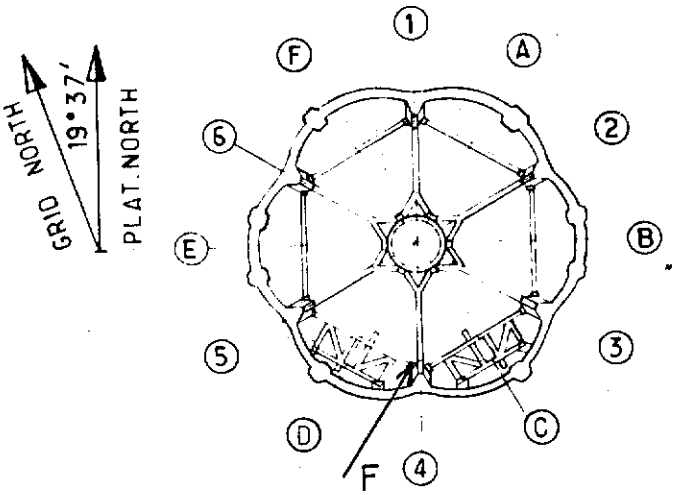

KEY PLAN

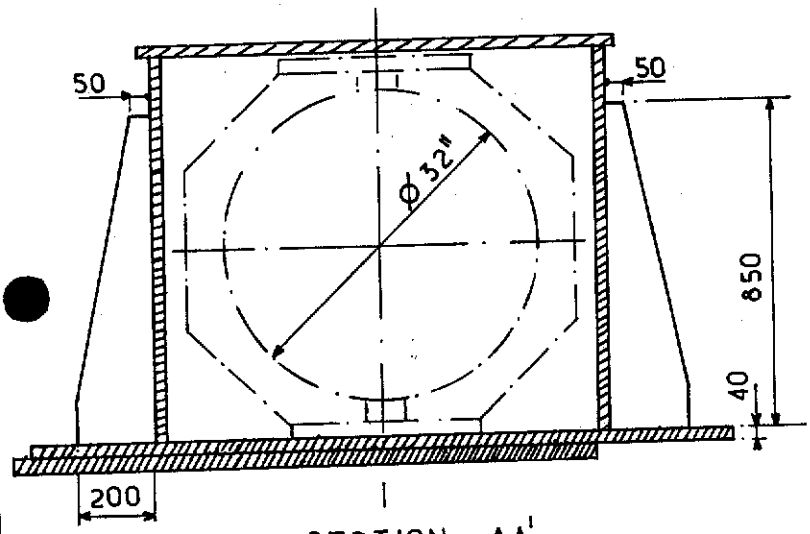

SECTION AA'

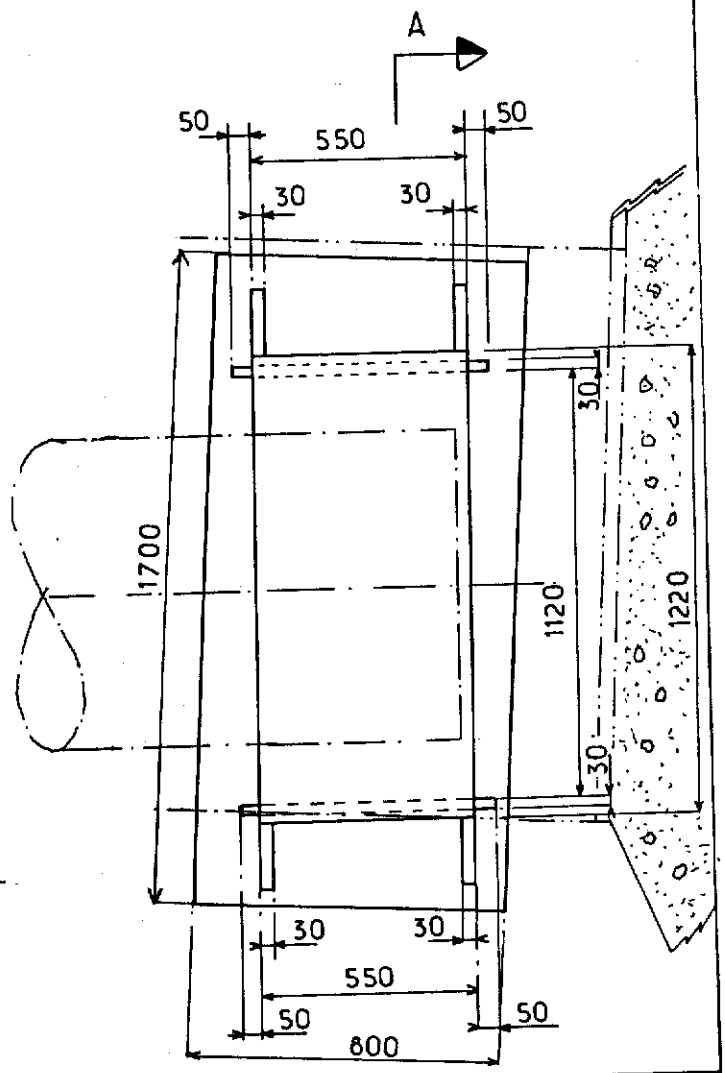

NOTES

FOR LOCATION SEE SK FF. 91.36.35.1355.
FOR DETAIL OF FREE LOCK PIPE END SEE SK FF. 91.36.35.1369.

Rev.	Date	DESCRIPTION	by	app.
1	12.83	UP DATED	BVH	JC

Contractor JVD 1029_40_41_

elf aquitaine norge a/s
p.o.box 168
4001 Stavanger

elf
FRIGG FIELD

Job no.	Installation	System
	CDP 1	UNDERWATER
Scale 1:20	BOX FOR FREE LOCK GD1 CELL D LEVEL G	
Dwgr. no FF 91·36·35·1371	Sheet 1	Issue

CDP 1 AS BUILT DRAWINGS

REFERENCE DRAWING LIST FOR:

ORIGINATOR	CONSTRUCTION DRAWING REF.	TITLE	Rev	Sheet	Size
- C G. DORIS.	A1. MP. QF. 1245	BOX FOR FREE LOCK.	1		A1
		ZONE D . LEVEL G .			

ELF DRAWING NUMBER	REVISION Index	REVISION Date	TITLE

Rev.	Date	DESCRIPTION	by	app.

Contractor

elf aquitaine norge a/s
p.o.box 168
4001 Stavanger

elf
FRIGG FIELD

Job no.	Installation CDP 1	System UNDERWATER
Scale	BOXE FOR FREE LOCK GD1	
Dwgr. no. FF 1371	Rev.	Sheet /

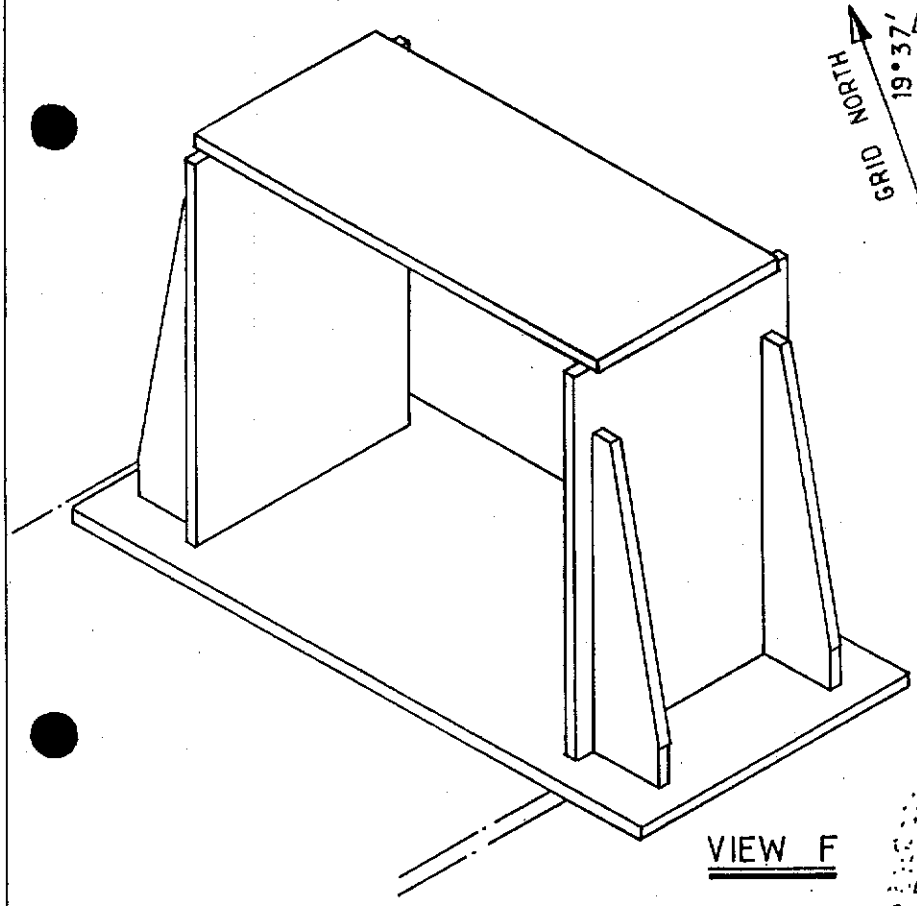

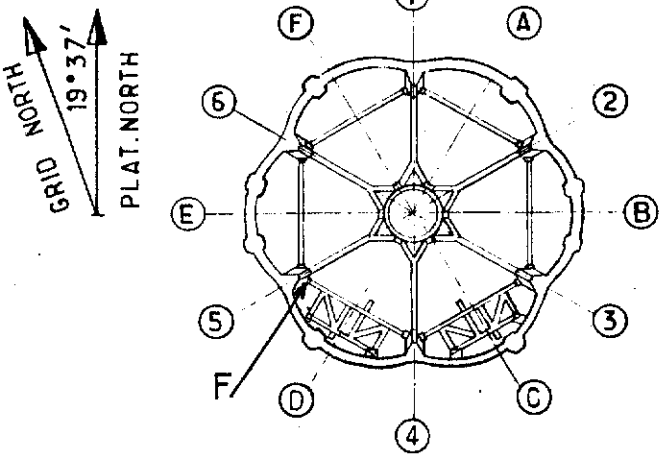

KEY PLAN

VIEW F

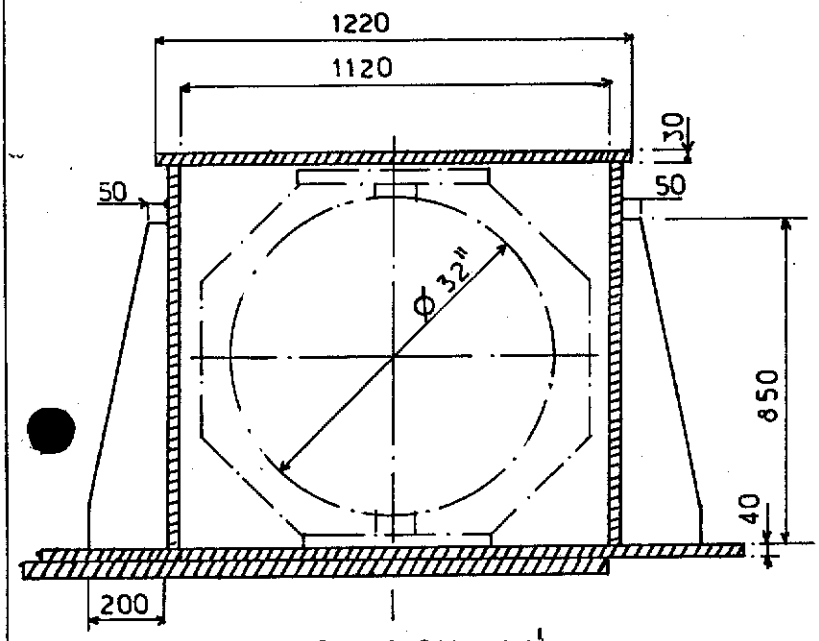

SECTION AA'

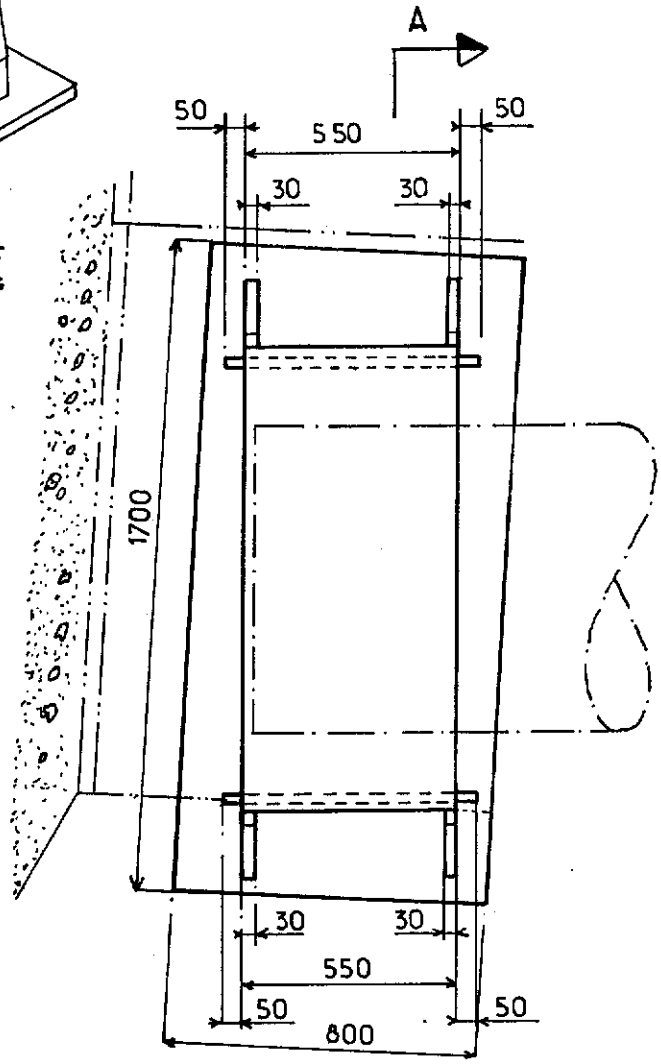

NOTES

FOR LOCATION SEE SK FF.91.36.35.1355

FOR DETAIL OF FREE LOCK PIPE END SEE SK.FF.91.36.35.1370.

Rev.	Date	DESCRIPTION	by	app.
1	12.83	UP DATED	BVH	

Contractor JVD 1029.40.42.

elf aquitaine norge a/s
p.o.box 168
4001 Stavanger

elf
FRIGG FIELD

Job no.	Installation	System
	CDP 1	UNDERWATER
Scale 1:20	BOX FOR FREE LOCK CELL D LEVEL G	GD4
Dwgr. no. FF 91·36·35·1372	Rev. 1	Sheet

CDP 1 AS BUILT DRAWINGS

REFERENCE DRAWING LIST FOR:

ORIGINATOR	CONSTRUCTION DRAWING REF.	TITLE	Rev	Sheet	Size
- C G. DORIS.	A1. MP. QF. 1245	BOX FOR FREE LOCK.	1		A1
		ZONE D . LEVEL G .			

ELF DRAWING NUMBER	REVISION Index	REVISION Date	TITLE

Rev.	Date	DESCRIPTION	by	app.

Contractor

elf aquitaine norge a/s
p.o.box 168
4001 Stavanger

elf
FRIGG FIELD

Job no.	Installation	System
	CDP 1	UNDERWATER
Scale	BOXE FOR FREE LOCK GD4	
Dwgr. no. FF 1372	Rev.	Sheet /

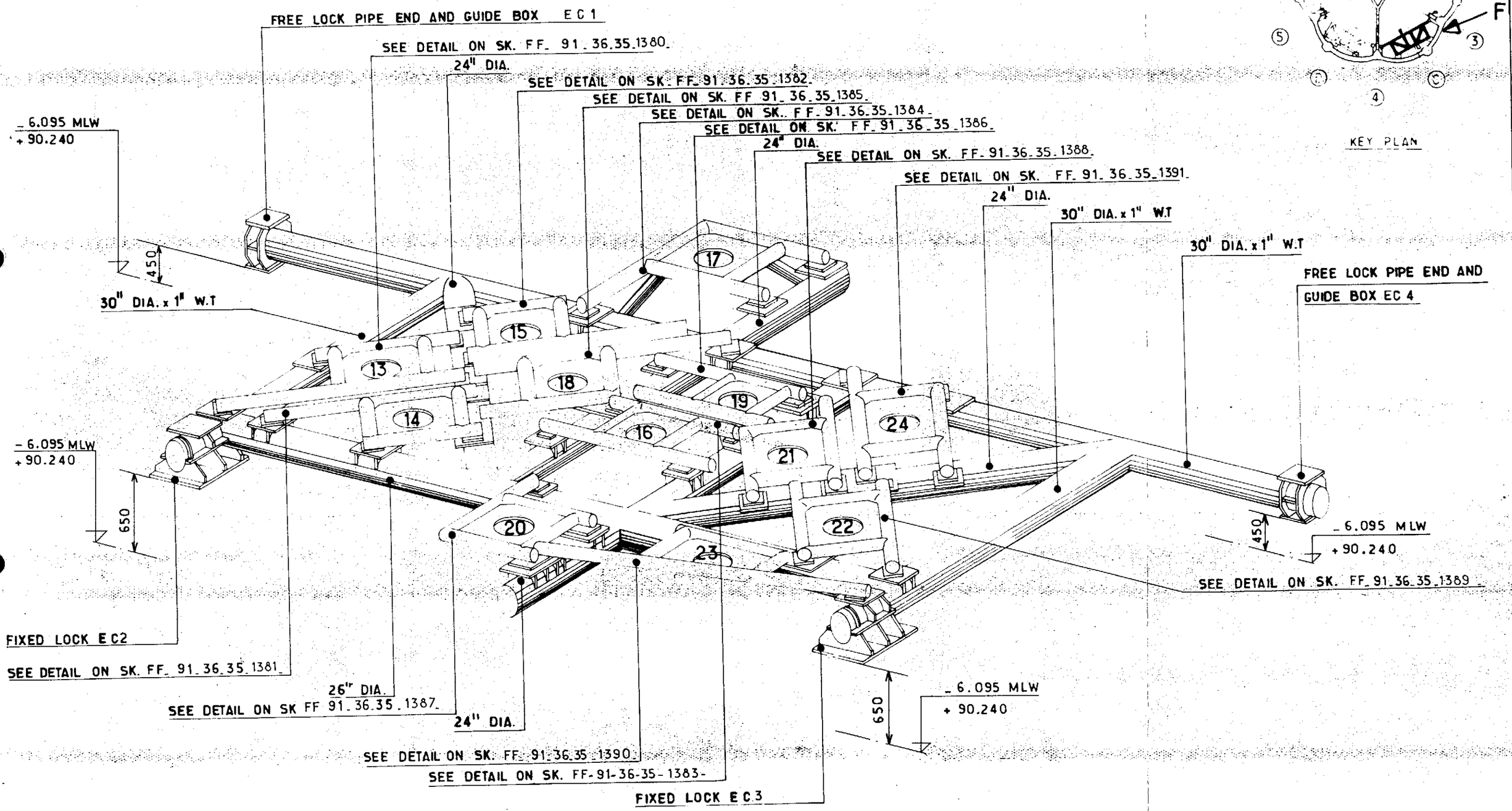

—VIEW F—

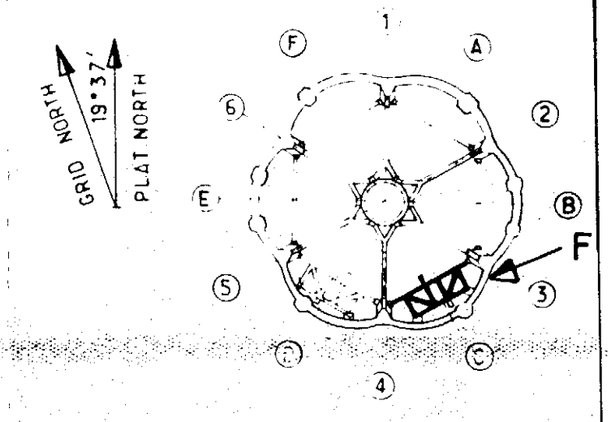

KEY PLAN

NOTES

FOR FREE LOCK PIPE ENDS AND GUIDE BOXES SEE SK FF 91-36-35-1392/1393/1394/1395.
FOR REPAIR OF GUIDE FRAME SUPPORTS, SEE FF 91 36 35 1396

Rev.	Date	DESCRIPTION	by	app.
2	21.2.86	NOTE ADDED	T.B.	
1	12.83	UP DATED	B.V.H	J.C

Contractor JVD_1029_40_48

elf aquitaine norge a/s
p.o.box 168
4001 Stavanger

elf
FRIGG FIELD

Job no.	Installation	System
	CDP 1	UNDERWATER
Scale —	GENERAL VIEW OF CONDUCTOR GUIDE FRAME CELL C LEVEL E	
Dwgr no. FF_91_36_35_1378	Rev. 2	Sheet

CDP 1 AS BUILT DRAWINGS

REFERENCE DRAWING LIST FOR: CONDUCTOR GUIDE FRAME

ORIGINATOR	CONSTRUCTION DRAWING REF.	TITLE	Rev	Sheet	Size
C. G. DORIS	A0 MP QF 1042	WORKING DRAWING AND CUTTING OUT OF GUIDE FRAME Ø30"	1		A1
" "	A1 MP QF 1102	GENERAL LAYOUT OF THE GUIDE FRAME	1		A1
" "	A1 MP QF 1103	GENERAL LAYOUT OF THE BASE PLATES	1		A1
" "	A1 MP QF 1113	POSITION OF DRILLING HOLES	2		A1
" "	A1 MP QF 1125	FIXED LOCK FOR GUIDE FRAME Ø30" EC I	3		A1
" "	A1 MP QF 1126	FIXED LOCK FOR GUIDE FRAME Ø30" EC II	3		A1
" "	A1 MP QF 1159	PIPE END OF GUIDE FRAME	1		A1
" "	A1 MP QF 1188	PIPE END FOR FREE LOCK	1		A1
" "	A1 MP QF 1240	BOX FOR FREE LOCK	1		A1

ELF DRAWING NUMBER	REVISION Index	REVISION Date	TITLE

Rev.	Date	DESCRIPTION	by	app.

Contractor

elf aquitaine norge a/s
p.o.box 168
4001 Stavanger

elf

FRIGG FIELD

Job no.	Installation	System
	CDP 1	UNDERWATER
Scale		
Dwgr. no. FF 1378	Rev	Sheet

Form 100 318

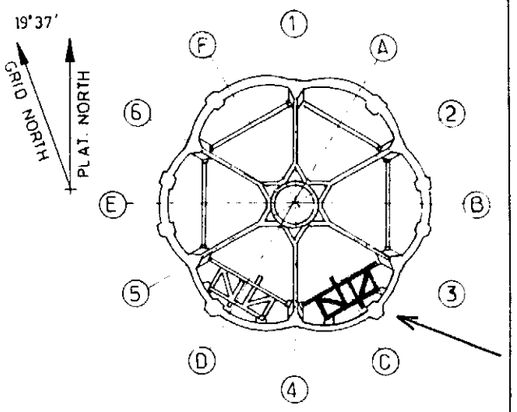

KEY PLAN

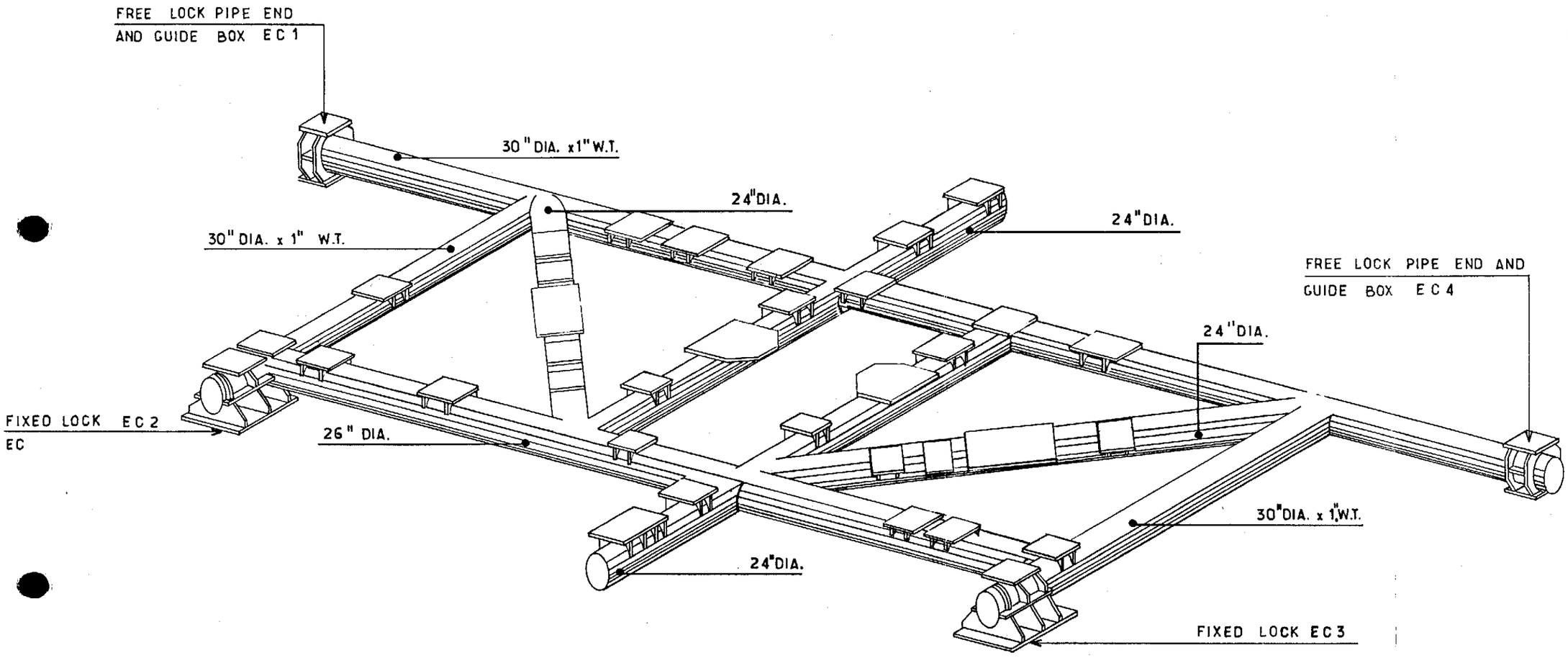

NOTES

FOR SECONDARY FRAME DETAILS SEE SK FF 91-36-35-1380 TO FF. 91.36.35.1391
FOR FREE LOCK PIPE ENDS AND GUIDE BOXES SEE SK FF. 91.36.35.1392 / 1393 / 1394 / 1395.

Rev.	Date	DESCRIPTION	by	app.
1	12.83	UP DATED	B.VH	J.LC

Contractor JVD 1029-40-49

elf aquitaine norge a/s
p.o.box 168
4001 Stavanger

elf
FRIGG FIELD

Job no.	Installation	System
	CDP 1	UNDERWATER
Scale —	GENERAL VIEW OF SECONDARY FRAME SUPPORT CELL C LEVEL E	
Dwgr. no	FF 91-36-35-1379	1

CDP 1 AS BUILT DRAWINGS

REFERENCE DRAWING LIST FOR:

ORIGINATOR	CONSTRUCTION DRAWING REF.	TITLE	Rev	Sheet	Size
C.G. DORIS	A1.MP.QF.1103	GENERAL LAYOUT OF THE	1		A1
		BASE PLATES			
		LEVEL E CELL C			
" "	A1.MP.QF.1147	DETAIL OF BASE PLATE	1		A1
" "	A1.MP.QF.1148	" " " "	1		A1
" "	A1.MP.QF.1149	" " " "	1		A1
" "	A1.MP.QF.1154	" " " "	1		A1

ELF DRAWING NUMBER	REVISION Index	REVISION Date	TITLE

Rev.	Date	DESCRIPTION	by	app.

Contractor

elf aquitaine norge a/s
p.o.box 168
4001 Stavanger

elf

FRIGG FIELD

Job no.	Installation	System
	CDP 1	UNDERWATER
Scale		
Dwgr. no. FF 1379	Rev.	Sheet /

Form 100 318

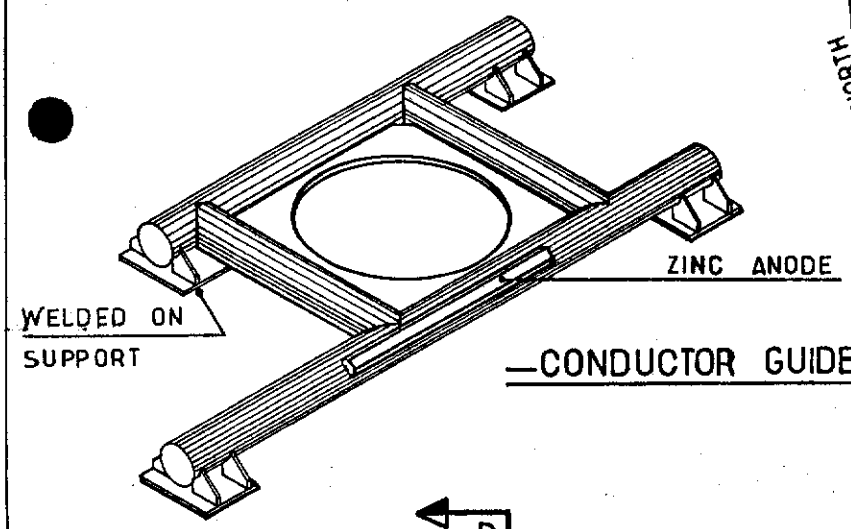

—CONDUCTOR GUIDE N°13—

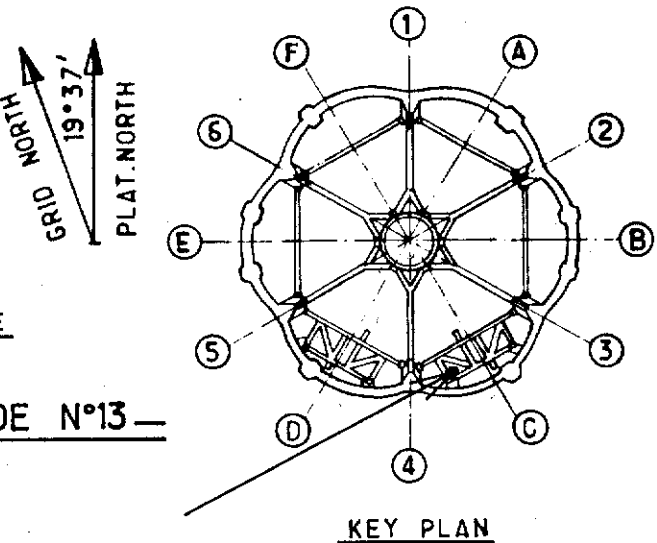

KEY PLAN

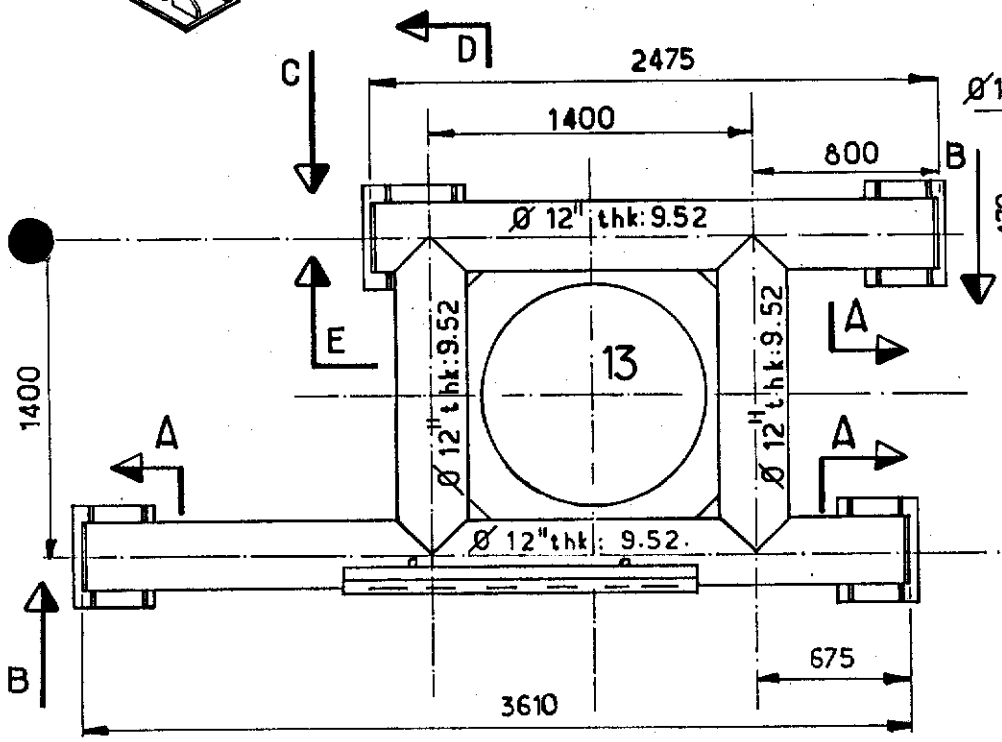

—PLAN VIEW—

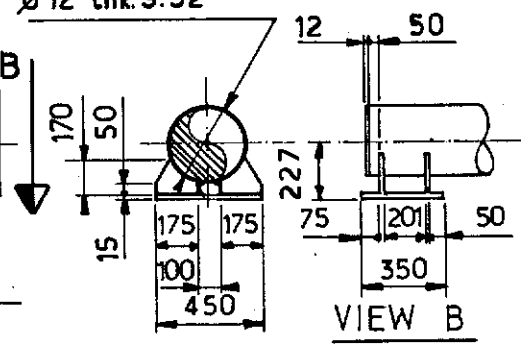

SECTION A

VIEW B

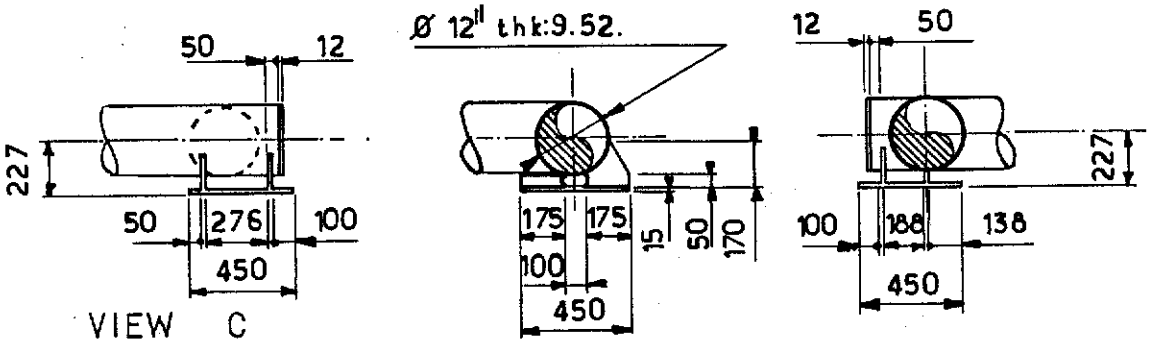

VIEW C

SECTION D

SECTION E

NOTES

FOR LOCATION SEE SK FF 91-36-35-1378
FOR CONDUCTOR SLEEVE SEE SK FF-91-36-35-1491
FOR ZINC ANODE SEE SK FF 91-36-35-1587

Rev.	Date	DESCRIPTION	by	app.
1	12.83	UP DATED	BVH	JLC

Contractor JVD 1029_40_50

elf aquitaine norge a/s
p.o.box 168
4001 Stavanger

elf
FRIGG FIELD

Job no.	Installation	System
	CDP 1	UNDERWATER

Scale 1:33

CONDUCTOR GUIDE N°13 CELL C
SECONDARY FRAME LEVEL E

Dwgr. no. FF 91.36.35.1380 | Rev. 1 | Sheet /

Form 100 318

CDP 1 AS BUILT DRAWINGS

REFERENCE DRAWING LIST FOR:

ORIGINATOR	CONSTRUCTION DRAWING REF.	TITLE	Rev	Sheet	Size
C.G. DORIS	AI. MP. QF. 1072	SECONDARY FRAME FOR	1		A1.
		RULING OF THE CONDUCTOR			
		SELEEVE ZONE C.			

ELF DRAWING NUMBER	REVISION Index	REVISION Date	TITLE

Rev.	Date	DESCRIPTION	by	app.

Contractor

elf aquitaine norge a/s
p.o.box 168
4001 Stavanger

elf

FRIGG FIELD

Job no.	Installation	System
	CDP 1	UNDERWATER
Scale		
Dwgr. no. FF 1380	Rev.	Sheet 1

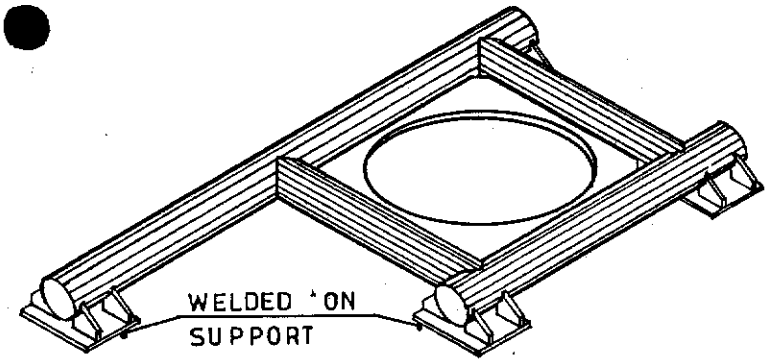

— CONDUCTOR GUIDE N°14 —

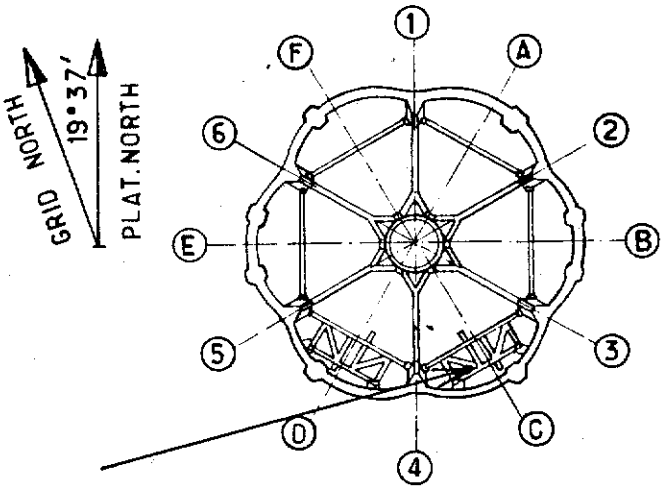

KEY PLAN

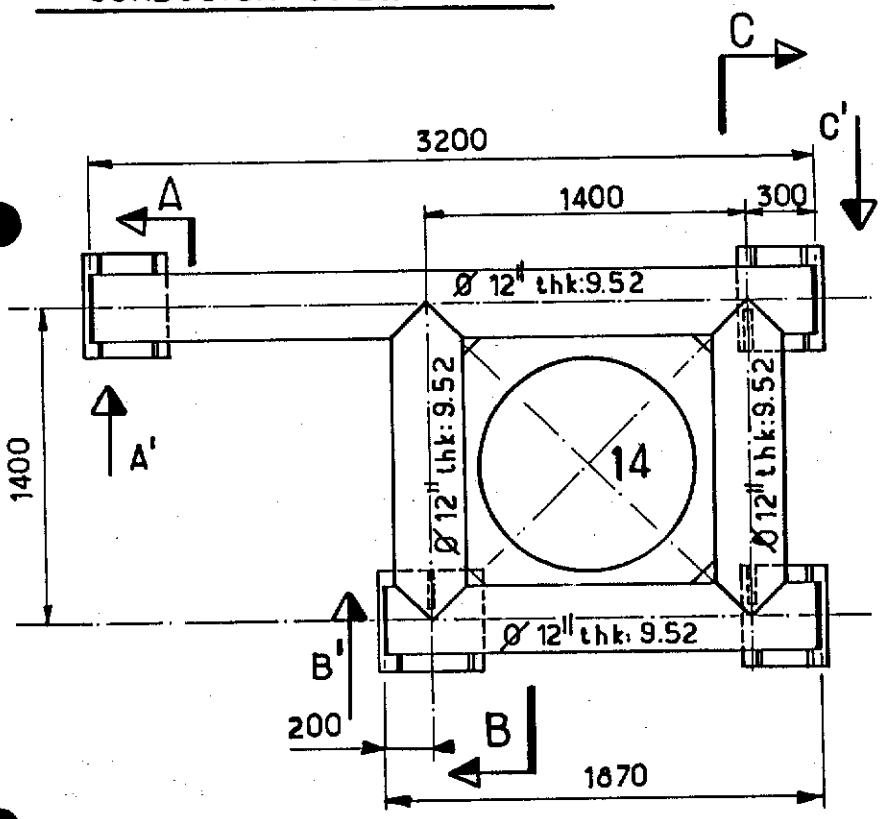

— PLAN VIEW —

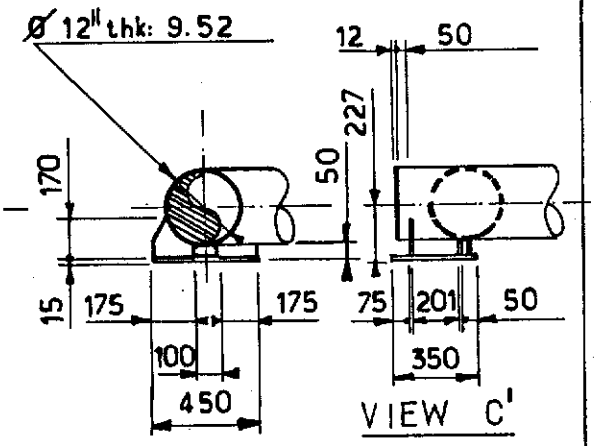

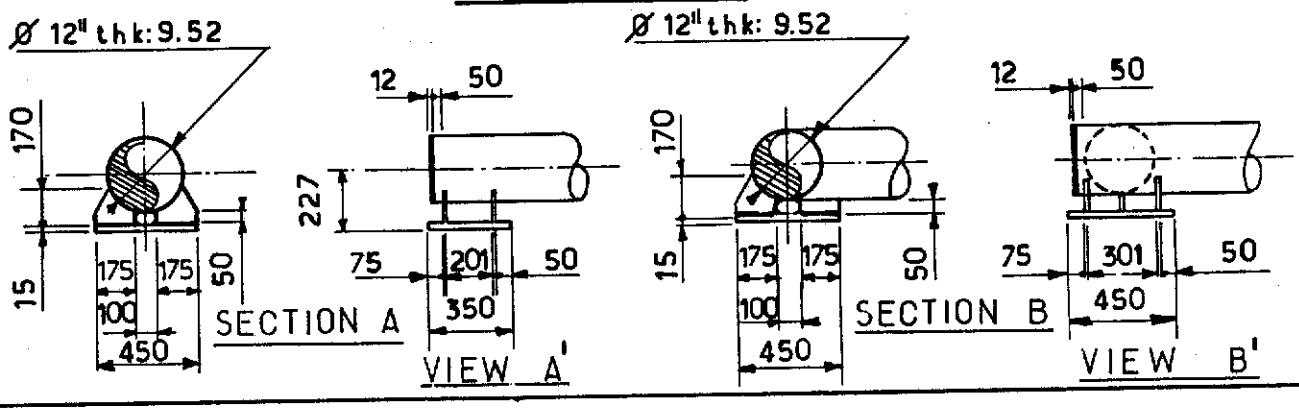

NOTES FOR LOCATION SEE SK FF. 91.36.35. 1378
FOR CONDUCTOR SLEEVE SK FF-91-36-35-1491.

Rev.	Date	DESCRIPTION	by	app.
1	12.83	UP DATED	BVH	JLC

Contractor JVD 1029_40_51_

elf aquitaine norge a/s
p.o.box 168
4001 Stavanger

elf
FRIGG FIELD

Job no.	Installation	System
	CDP 1	UNDERWATER
Scale 1:33	CONDUCTOR GUIDE N°14 CELL C SECONDARY FRAME LEVEL E	
Dwgr. no. FF-91-36.35-1381.	Rev. 1	Sheet /

Form 100 318

CDP 1 AS BUILT DRAWINGS

REFERENCE DRAWING LIST FOR:

ORIGINATOR	CONSTRUCTION DRAWING REF.	TITLE	Rev	Sheet	Size
C.G. DORIS	A1. MP. QF. 1073	SECONDARY FRAME FOR	1		A1
		RULING OF THE CONDUCTOR			
		SELEEVE ZONE C.			

ELF DRAWING NUMBER	REVISION Index	REVISION Date	TITLE

Rev.	Date	DESCRIPTION	by	app.

Contractor

elf aquitaine norge a/s
p.o.box 168
4001 Stavanger

elf
FRIGG FIELD

Job no.	Installation	System
	CDP 1	UNDERWATER
Scale		
Dwgr. no. FF 1381		

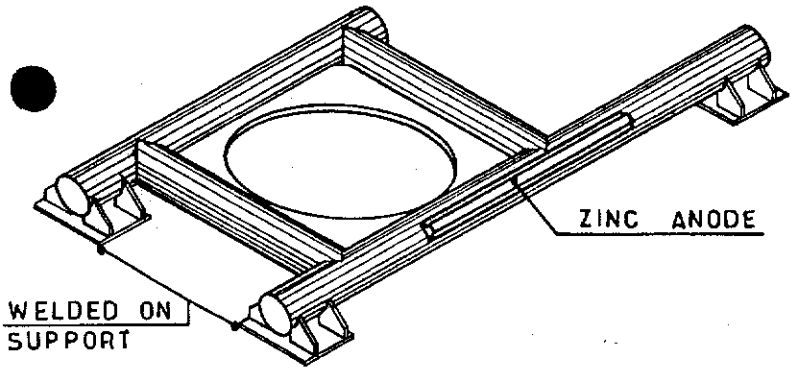

CONDUCTOR GUIDE N°15

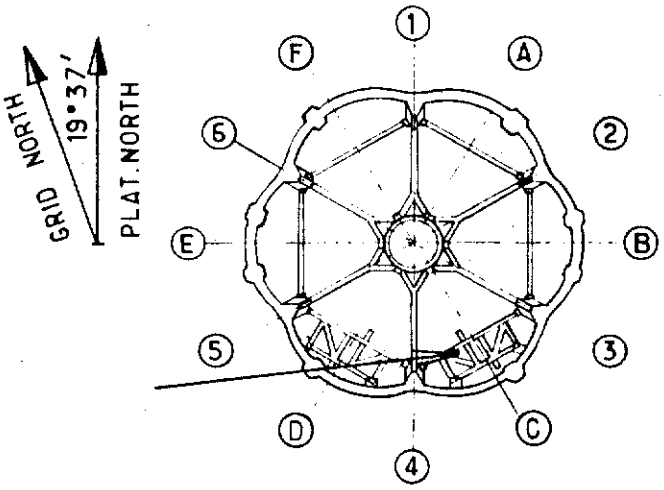

KEY PLAN

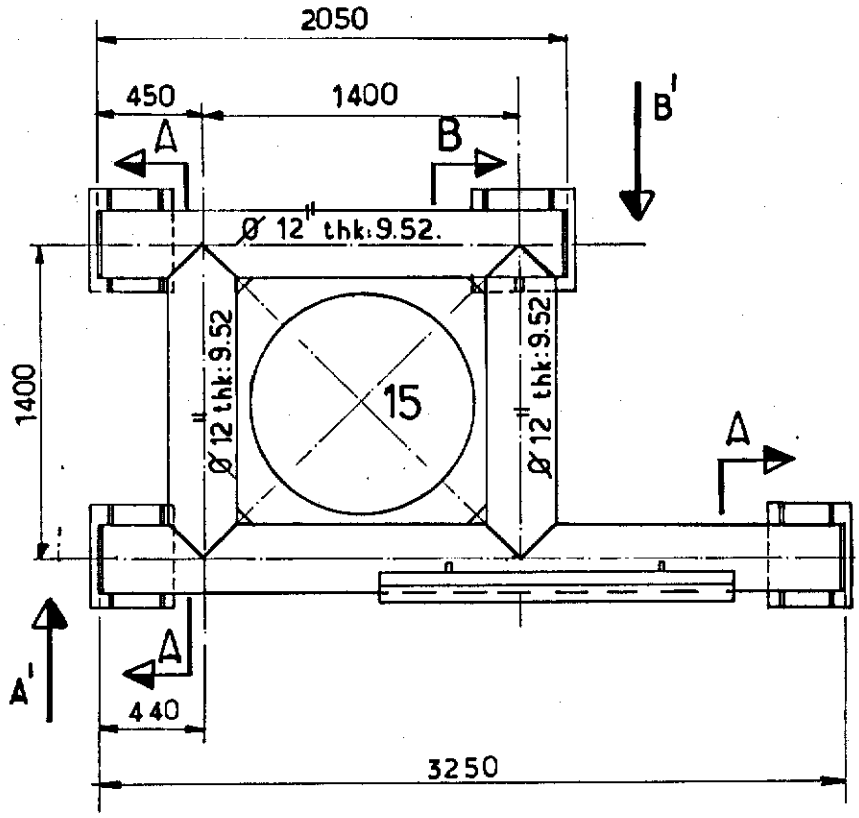

PLAN VIEW

SECTION A

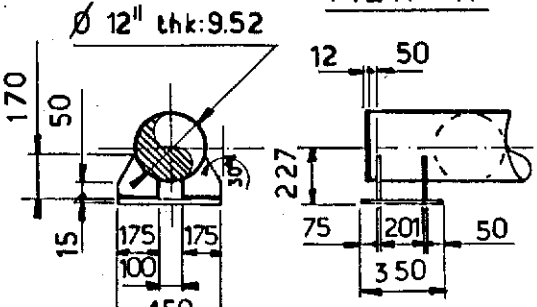

VIEW A'

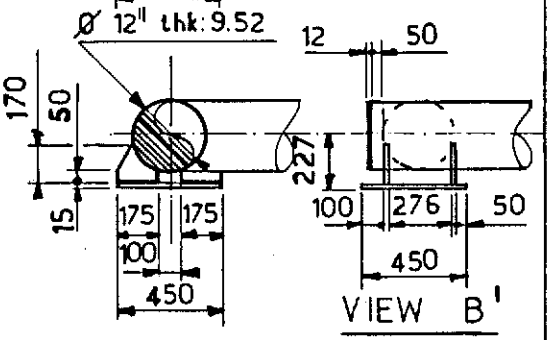

VIEW B'

SECTION B

NOTES

FOR LOCATION SEE SK FF 91.36.35.1378 .
FOR CONDUCTOR SLEEVE SEE SK FF.91.36.35.1491
FOR ZINC ANODE SEE SK FF.91.36.35.1587

Rev.	Date	DESCRIPTION	by	app.
1	12.83	UP DATED	B.V.H	JLC

Contractor JVD 1029_40_52_

elf aquitaine norge a/s
p.o.box 168
4001 Stavanger

elf
FRIGG FIELD

Job no.	Installation	System
	CDP 1	UNDERWATER
Scale 1:33	CONDUCTOR GUIDE N°15 CELL C SECONDARY FRAME LEVEL E	
Dwgr. no. FF 91.36.35.1382	Rev 1	Sheet /

Form 100 318

CDP 1 AS BUILT DRAWINGS

REFERENCE DRAWING LIST FOR:

ORIGINATOR	CONSTRUCTION DRAWING REF.	TITLE	Rev	Sheet	Siz
C.G. DORIS	A1. MP. QF. 1071	SECONDARY FRAME FOR	1		A1
		RULING OF THE CONDUCTOR			
		SELEEVE ZONE C.			

ELF DRAWING NUMBER	REVISION Index	REVISION Date	TITLE

Rev.	Date	DESCRIPTION	by	app.

Contractor

elf aquitaine norge a/s
p.o.box 168
4001 Stavanger

elf

FRIGG FIELD

Job no.	Installation	System
	CDP 1	UNDERWATER
Scale		
Dwgr. no. FF 1382		

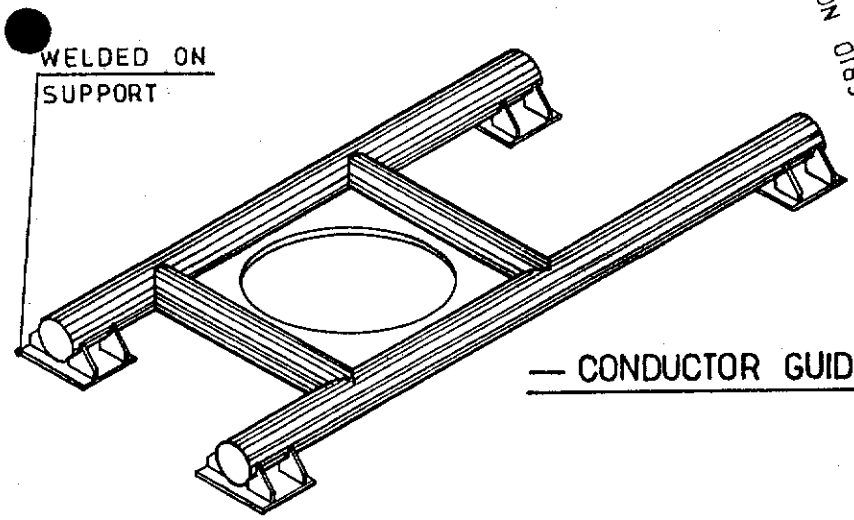

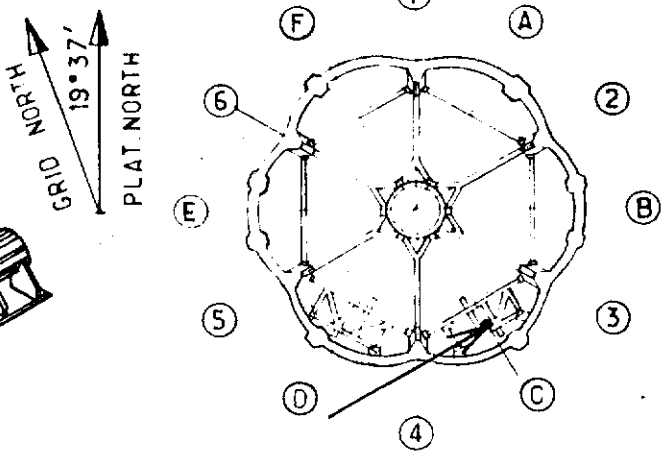

KEY PLAN

— CONDUCTOR GUIDE N°16 —

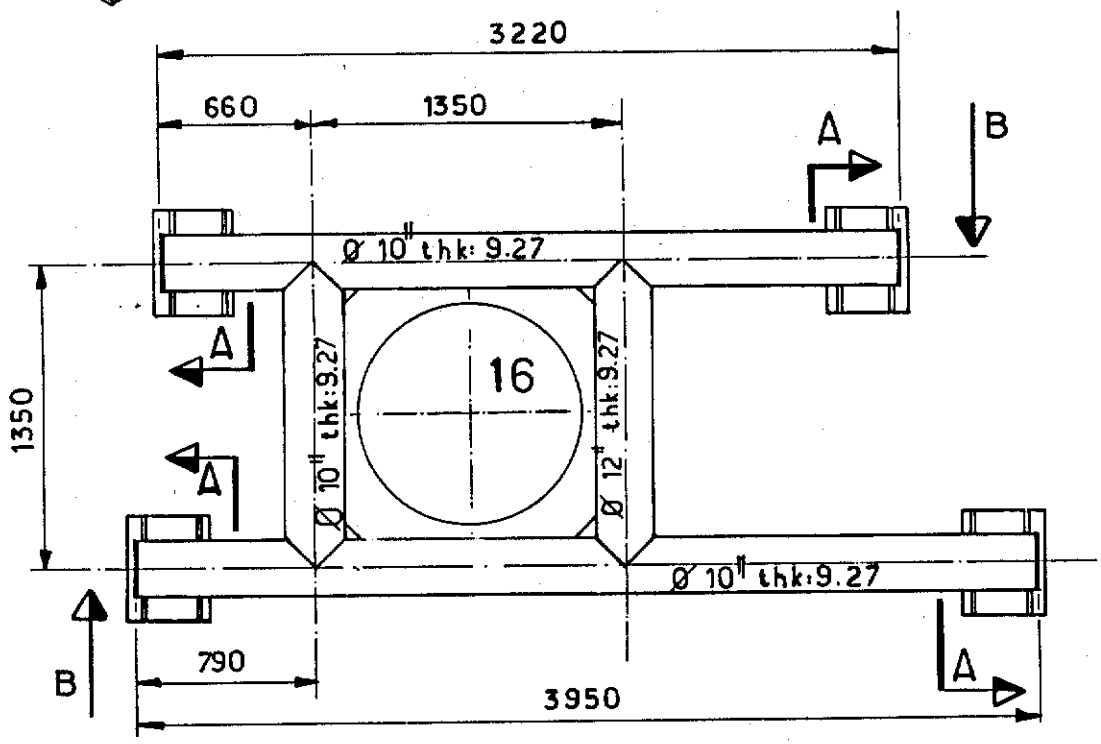

— PLAN VIEW —

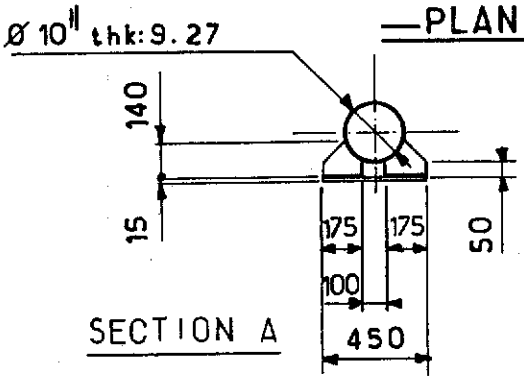

SECTION A

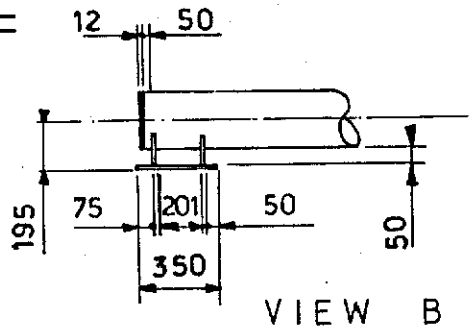

VIEW B

NOTES

FOR LOCATION SEE SK FF 91.36.35.1378 .
FOR CONDUCTOR SLEEVE SEE SK FF.91.36.35.1491.

Rev.	Date	DESCRIPTION	by	app.
1	12.83	UP DATED	BVH	JLC

Contractor JVD 1029_40_53_

elf aquitaine norge a/s
p.o.box 168
4001 Stavanger

elf
FRIGG FIELD

Job no.	Installation	System
	CDP 1	UNDERWATER
Scale 1:33	CONDUCTOR GUIDE N°16 CELL C SECONDARY FRAME LEVEL E	
Dwgr. no FF 91_36_35_1383_	Rev. 1	Sheet /

CDP 1 AS BUILT DRAWINGS

REFERENCE DRAWING LIST FOR:

ORIGINATOR	CONSTRUCTION DRAWING REF.	TITLE	Rev	Sheet	Siz
C.G. DORIS	A1. MP. QF. 1076	SECONDARY FRAME FOR	2		A1
		RULING OF THE CONDUCTOR			
		SELEEVE ZONE C.			

ELF DRAWING NUMBER	REVISION Index	REVISION Date	TITLE

Rev.	Date	DESCRIPTION	by	app.

Contractor

elf aquitaine norge a/s
p.o.box 168
4001 Stavanger

elf
FRIGG FIELD

Job no.	Installation	System
	CDP 1	UNDERWATER
Scale		
Dwgr. no. FF ___ ___ 1383		

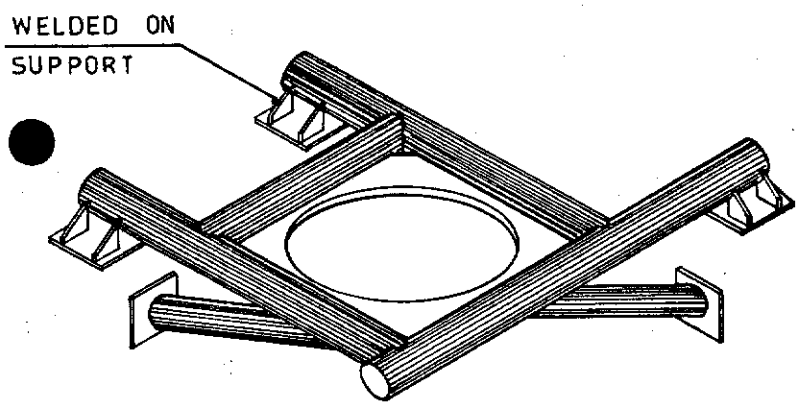

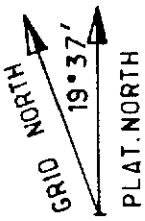

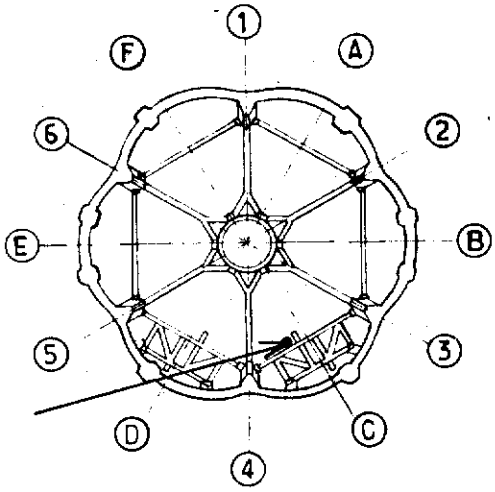

CONDUCTOR GUIDE N°17

KEY PLAN

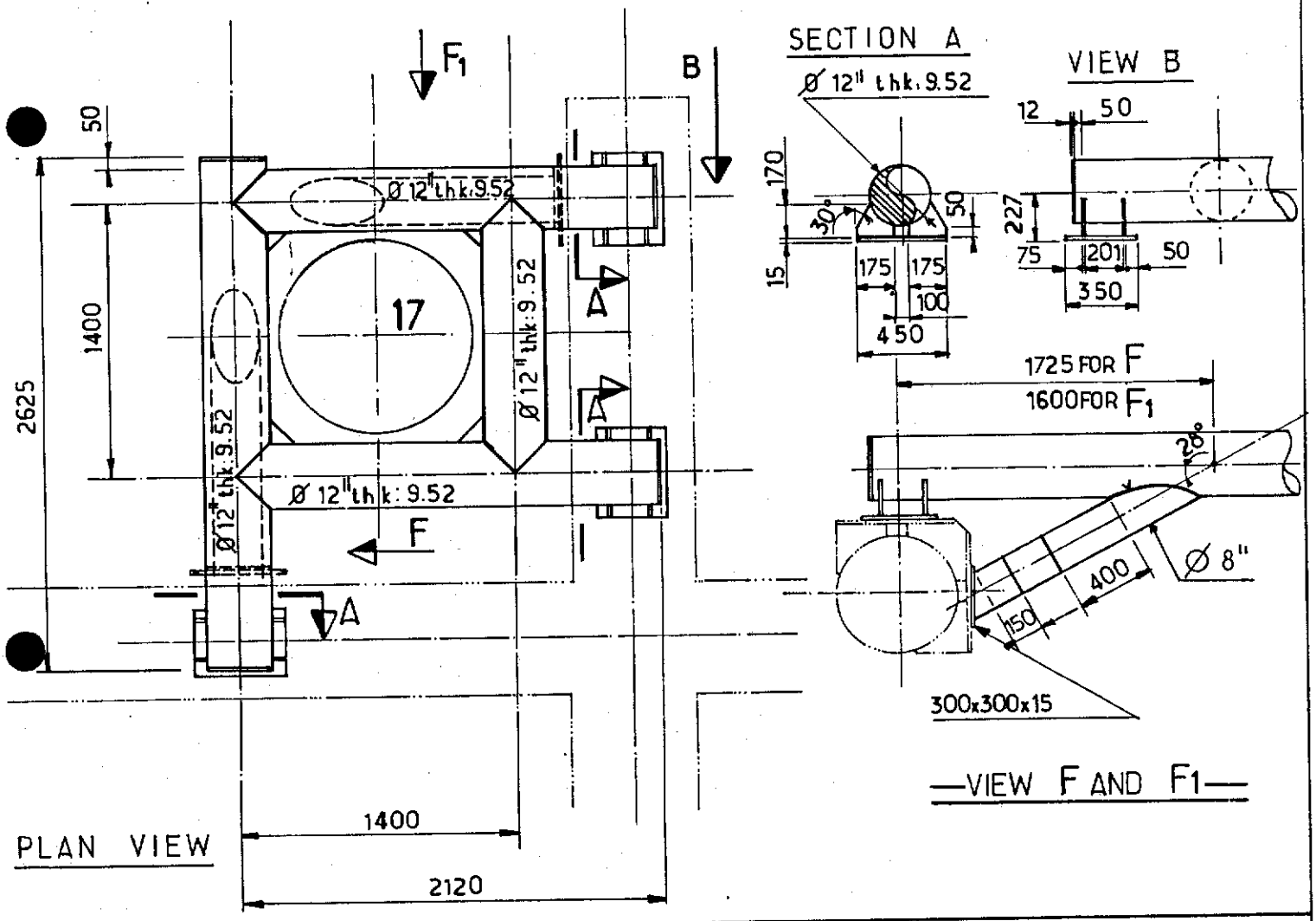

PLAN VIEW

VIEW F AND F1

NOTES

FOR LOCATION SEE SK FF.91.36.35.1378
FOR CONDUCTOR SLEEVE SEE SK FF 91.36.35.1491

Rev.	Date	DESCRIPTION	by	app.
1	12.83	UP DATED	BVH	JLC

Contractor JVD 1029_40_54_

elf aquitaine norge a/s
p.o.box 168
4001 Stavanger

elf
FRIGG FIELD

Job no.	Installation	System
	CDP 1	UNDERWATER
Scale 1:33	CONDUCTOR GUIDE N°17 CELL C SECONDARY FRAME LEVEL E	
Dwgr. no. FF 91_36_35_1384_	Rev 1	Sheet /

Form 100 318

CDP 1 AS BUILT DRAWINGS

REFERENCE DRAWING LIST FOR:

ORIGINATOR	CONSTRUCTION DRAWING REF.	TITLE	Rev	Sheet	Siz
C.G. DORIS	AI. MP. QF. 1070	SECONDARY FRAME FOR	1		A1
		RULING OF THE CONDUCTOR			
		SELEEVE ZONE C.			

ELF DRAWING NUMBER	REVISION		TITLE
	Index	Date	

Rev.	Date	DESCRIPTION	by	app.

Contractor

elf aquitaine norge a/s
p.o.box 168
4001 Stavanger

elf
FRIGG FIELD

Job no.	Installation	System
	CDP 1	UNDERWATER
Scale		
Dwgr. no. FF — — 1384		

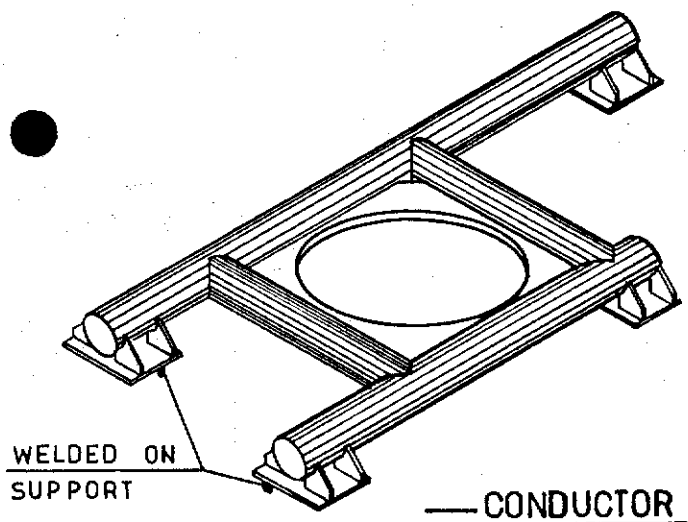

CONDUCTOR GUIDE N°18

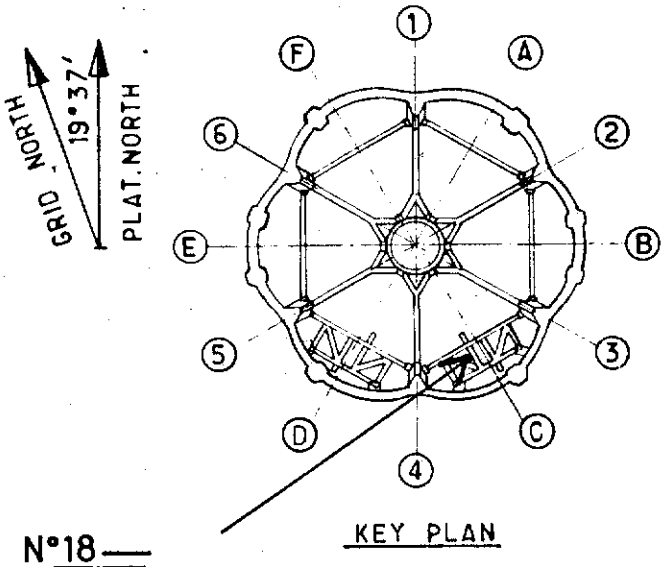

KEY PLAN

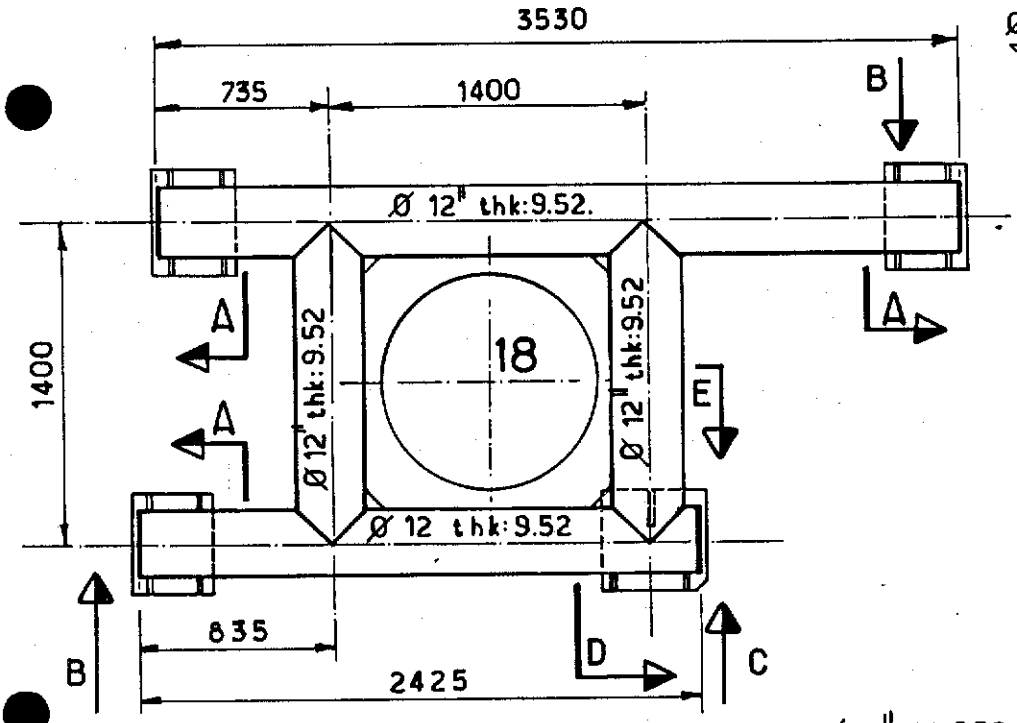

PLAN VIEW

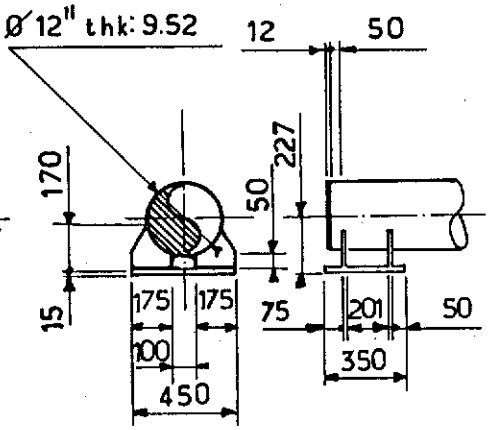

SECTION A VIEW B

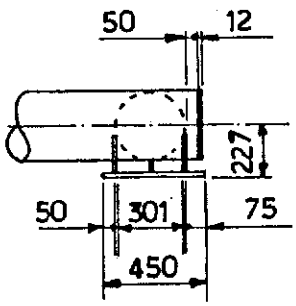

VIEW C

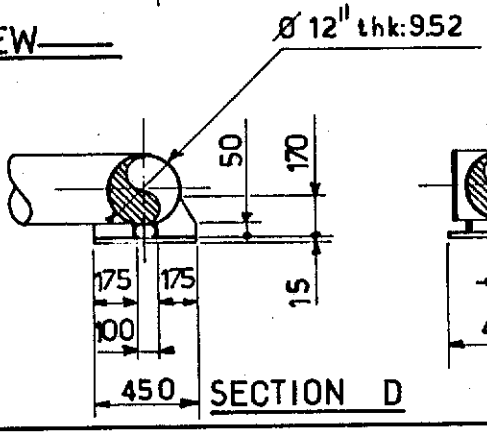

SECTION D

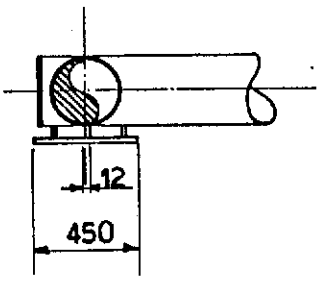

SECTION E

NOTES

FOR LOCATION SEE SK FF 91_36_35_1378_
FOR CONDUCTOR SLEEVE SEE SK FF 91_36_35_1491

Rev.	Date	DESCRIPTION	by	app.
1	12.83	UP DATED	BVH	JLC

Contractor JVD 1029_40_55_

elf aquitaine norge a/s
p.o.box 168
4001 Stavanger

elf
FRIGG FIELD

Job no.	Installation	System
	CDP 1	UNDERWATER
Scale 1:33	CONDUCTOR GUIDE N°18 CELL C SECONDARY FRAME LEVEL E	
Dwgr. no. FF 91_36_35_1385	Rev. 1	Sheet /

Form 100 318

CDP 1 AS BUILT DRAWINGS

REFERENCE DRAWING LIST FOR:

ORIGINATOR	CONSTRUCTION DRAWING REF.	TITLE	Rev	Sheet	Siz
C.G. DORIS	A1. MP. QF. 1074	SECONDARY FRAME FOR	1		A1
		RULING OF THE CONDUCTOR			
		SELEEVE ZONE C.			

ELF DRAWING NUMBER	REVISION		TITLE
	Index	Date	

Rev.	Date	DESCRIPTION	by	app.

Contractor

elf aquitaine norge a/s
p.o.box 168
4001 Stavanger

elf
FRIGG FIELD

Job no.	Installation	System
	CDP 1	UNDERWATER
Scale		
Dwgr. no. FF 1385		

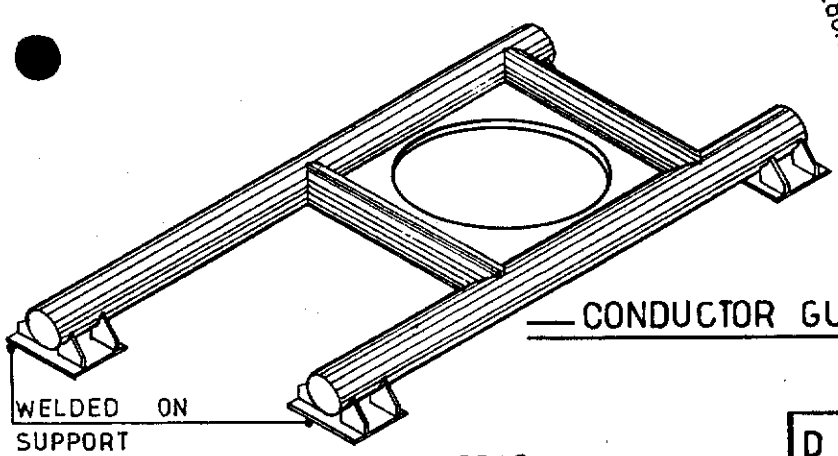

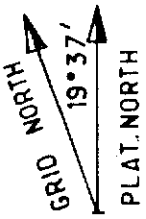

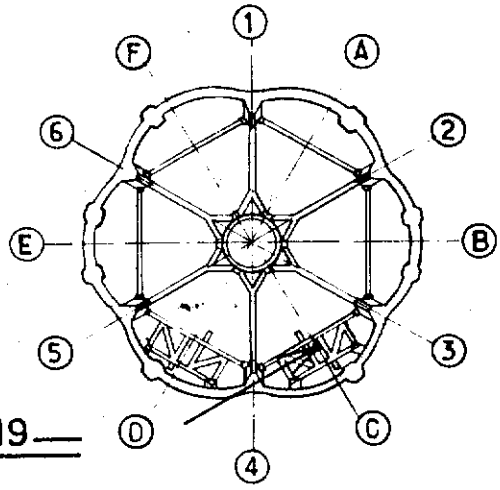

KEY PLAN

CONDUCTOR GUIDE N°19

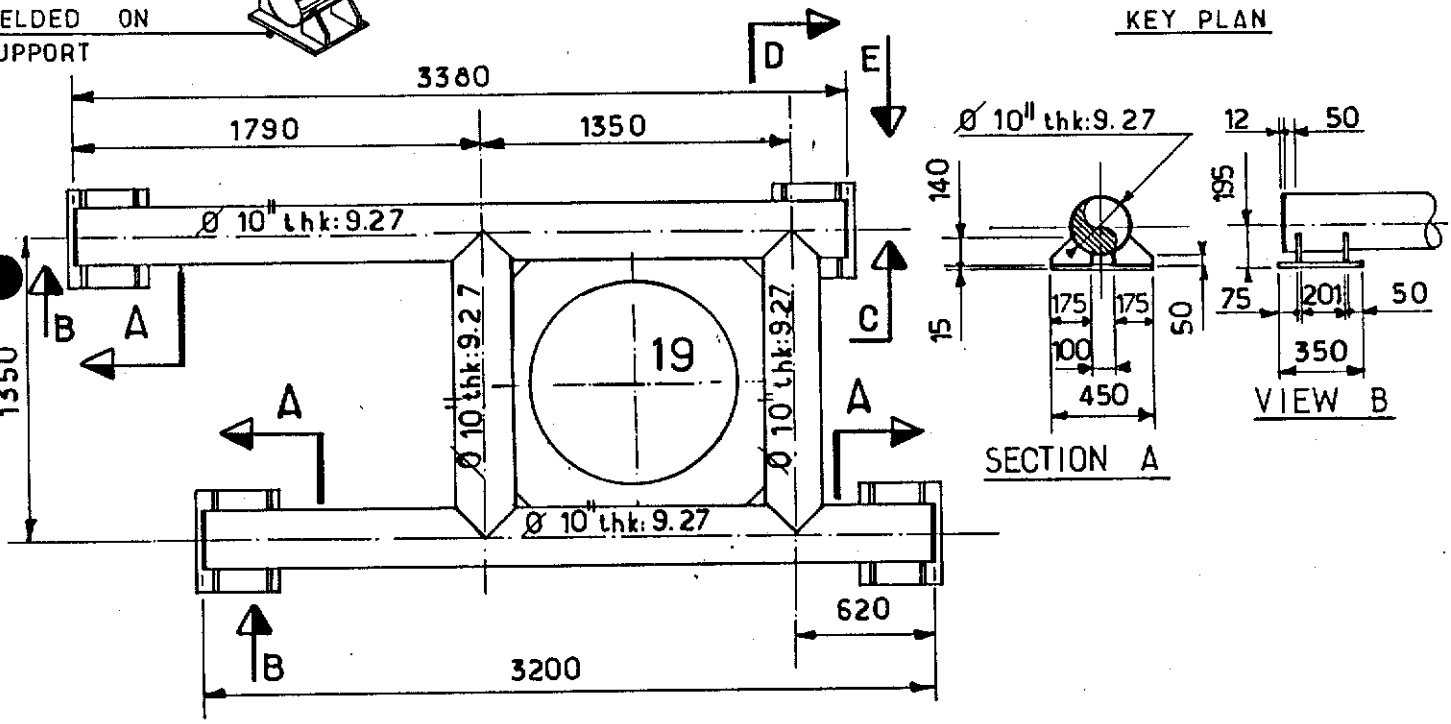

SECTION A

VIEW B

PLAN VIEW

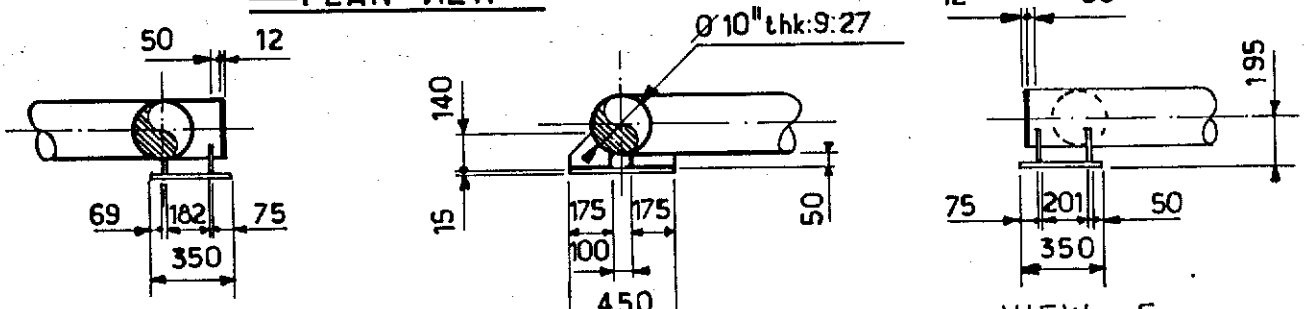

SECTION C

SECTION D

VIEW E

NOTES

FOR LOCATION SEE SK FF 91_36_35_1378

FOR CONDUCTOR SLEEVE SEE SK FF_91_36_35_1491.

Rev.	Date	DESCRIPTION	by	app.
1	12.83	UP DATED	B.VH	J.L.C

Contractor JVD 1029_40_56_

elf aquitaine norge a/s
p.o.box 168
4001 Stavanger

elf
FRIGG FIELD

Job no.	Installation	System
	CDP 1	UNDERWATER

Scale 1:33

CONDUCTOR GUIDE N°19 CELL C
SECONDARY FRAME LEVEL E

Dwgr. no. FF 91_36_35_1386

Rev. 1

Sheet

Form 100 318

CDP 1 AS BUILT DRAWINGS

REFERENCE DRAWING LIST FOR:

ORIGINATOR	CONSTRUCTION DRAWING REF.	TITLE	Rev	Sheet	Size
C.G. DORIS	A1. MP. QF. 1075	SECONDARY FRAME FOR RULING OF THE CONDUCTOR SELEEVE ZONE C.	2		A1.

ELF DRAWING NUMBER	REVISION Index	REVISION Date	TITLE

Rev.	Date	DESCRIPTION	by	app.

Contractor

elf aquitaine norge a/s
p.o.box 168
4001 Stavanger

elf
FRIGG FIELD

Job no.	Installation	System
	CDP 1	UNDERWATER
Scale		
Dwgr. no. FF 1386		

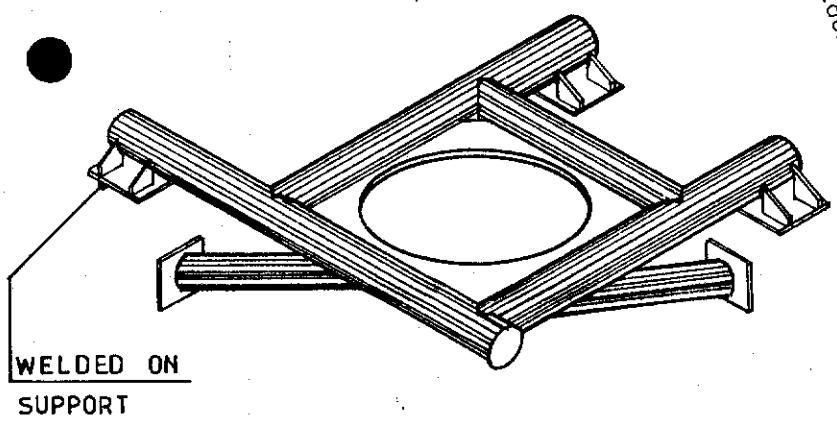

— CONDUCTOR GUIDE N°20 —

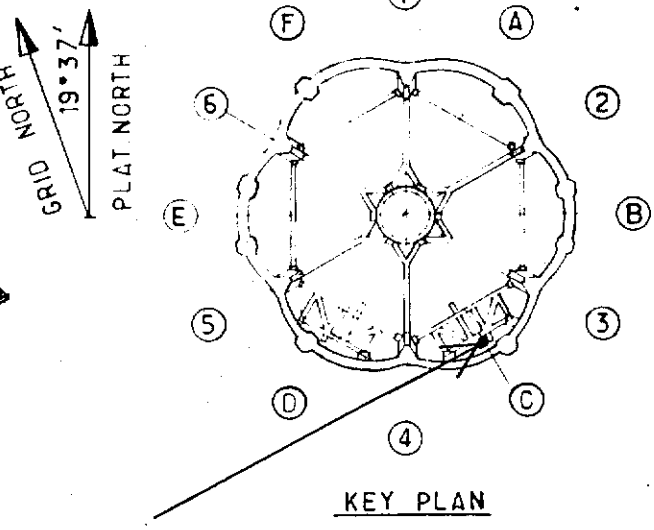

KEY PLAN

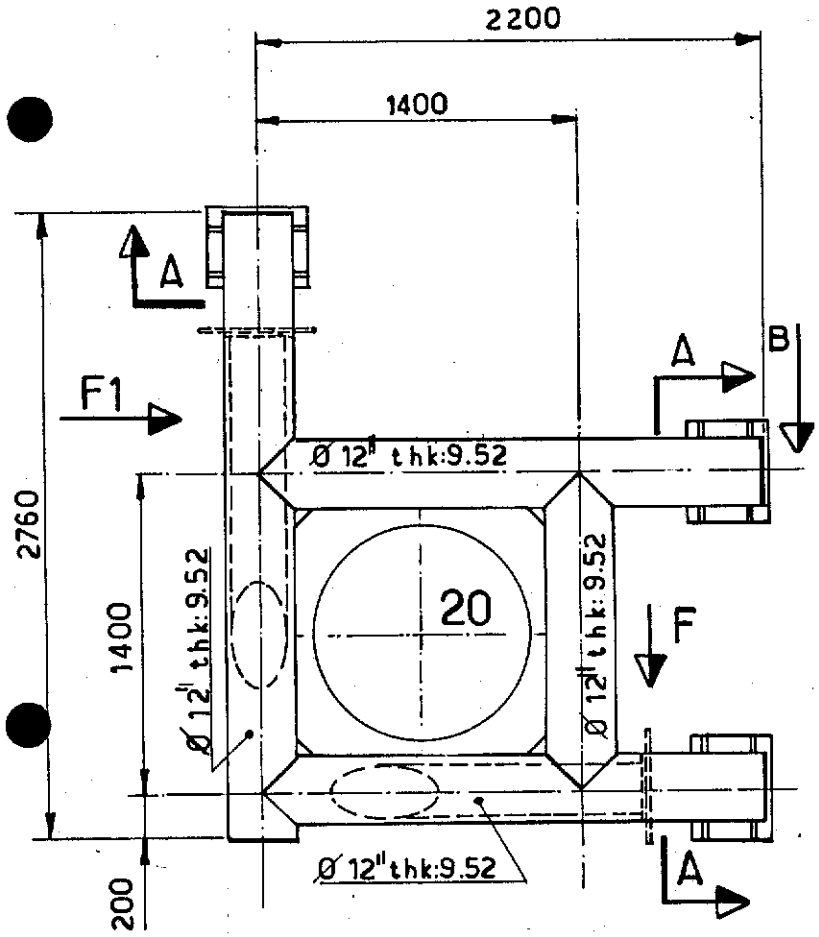

— PLAN VIEW —

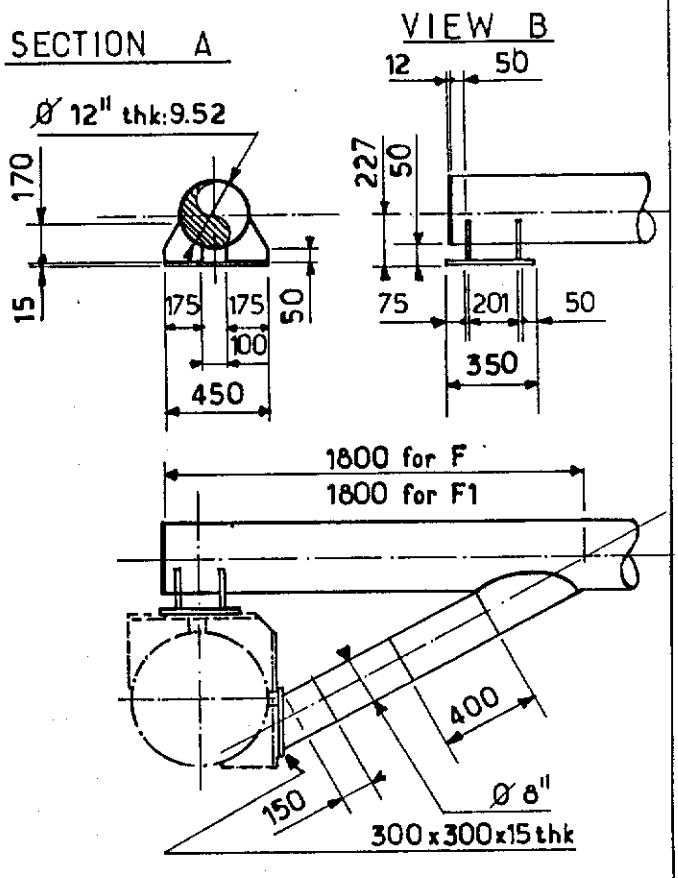

— VIEW F AND F1 —

NOTES

FOR LOCATION SEE SK FF 91-36-35-1378
FOR CONDUCTOR SLEEVE SEE SK FF-91-36-35-1491.

Rev.	Date	DESCRIPTION	by	app.
1	12.83	UP DATED	B.V.H	J.L.C

Contractor JVD 1029-40-57-

elf aquitaine norge a/s
p.o.box 168
4001 Stavanger

elf
FRIGG FIELD

Job no.	Installation	System
	CDP 1	UNDERWATER
Scale 1:33	CONDUCTOR GUIDE N° 20 CELL C SECONDARY FRAME LEVEL E	
Dwgr. no. FF 91-36-35-1387	Rev. 1	Sheet /

CDP 1 AS BUILT DRAWINGS

REFERENCE DRAWING LIST FOR:

ORIGINATOR	CONSTRUCTION DRAWING REF.	TITLE	Rev	Sheet	Size
C.G. DORIS	A1. MP. QF. 1077	SECONDARY FRAME FOR RULING OF THE CONDUCTOR SELEEVE ZONE C.	1		A1.

ELF DRAWING NUMBER	REVISION Index	REVISION Date	TITLE

Rev.	Date	DESCRIPTION	by	app.

Contractor

elf aquitaine norge a/s
p.o.box 168
4001 Stavanger

elf
FRIGG FIELD

Job no.	Installation	System
	CDP 1	UNDERWATER
Scale		
Dwgr. no. FF 1387		

CONDUCTOR GUIDE N°21

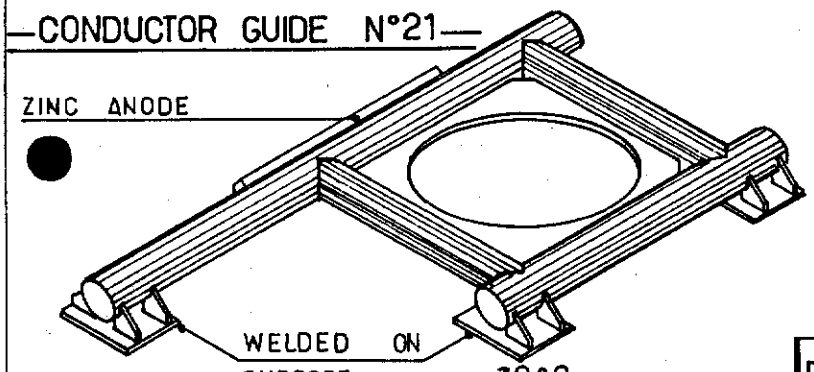

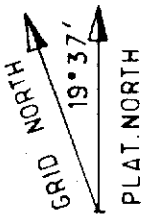

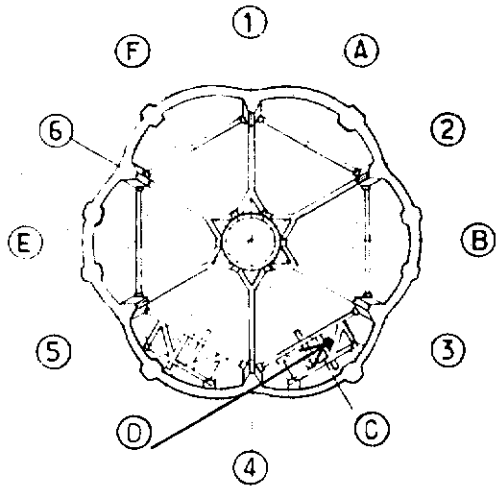

KEY PLAN

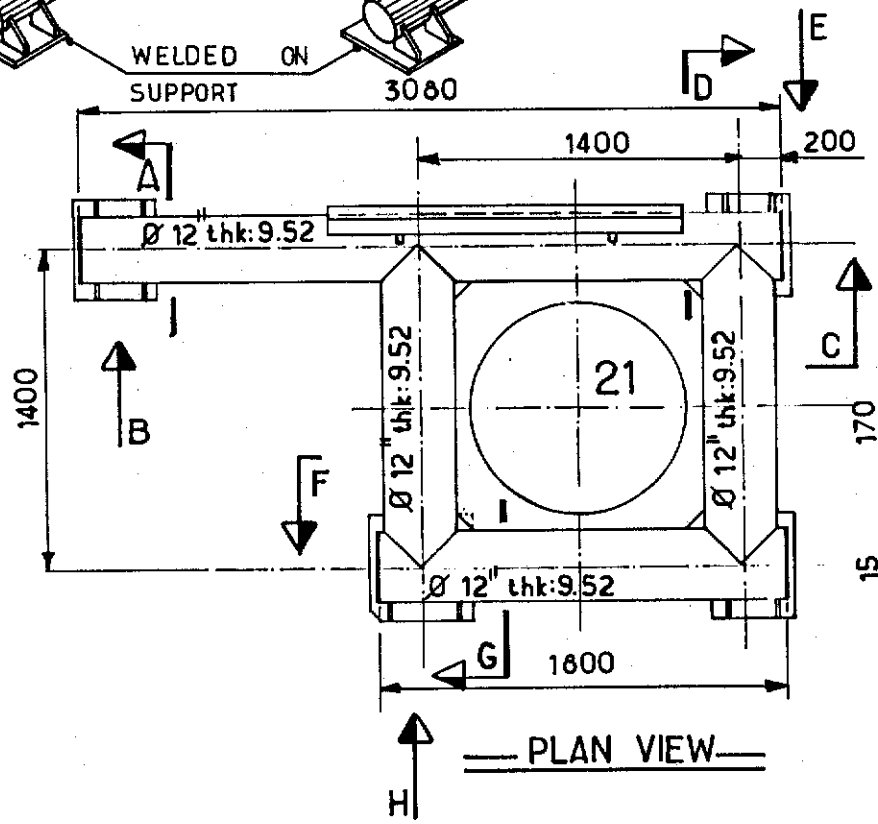

PLAN VIEW

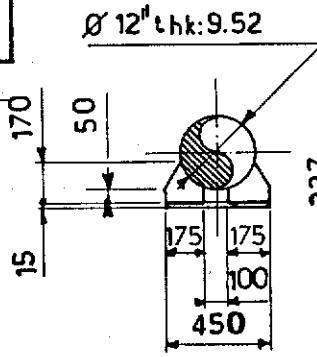

SECTION A

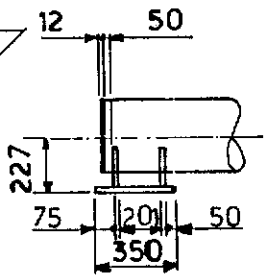

VIEW B

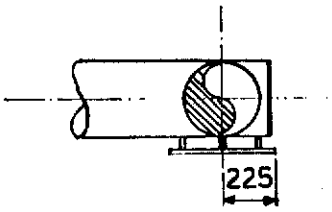

SECTION C

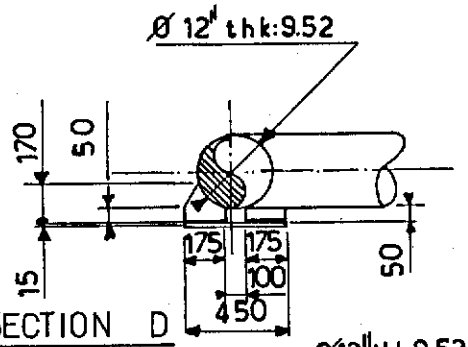

SECTION D

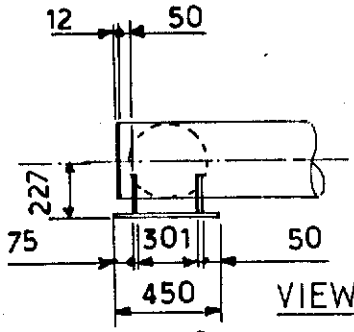

VIEW E

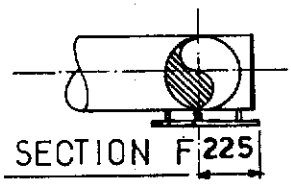

SECTION F

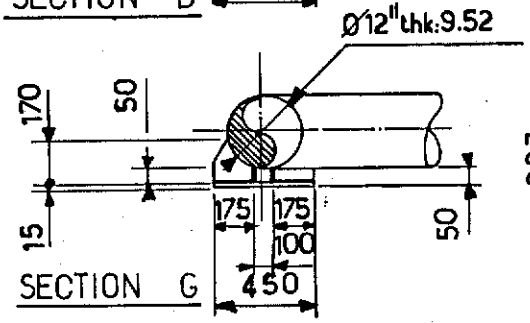

SECTION G

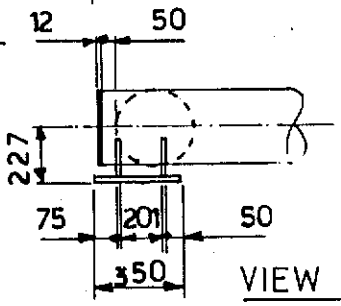

VIEW H

NOTES FOR LOCATION SEE SK FF.91.36.35.1378 / FOR ZINC ANODE SEE SK FF 91-36-35-1587
FOR CONDUCTOR SLEEVE SEE SK FF.91.36.35.1491.

Rev.	Date	DESCRIPTION	by	app.
1	12,83	UP DATED	BVH	MC

Contractor JVD 1029-40-58-

elf aquitaine norge a/s
p.o.box 168
4001 Stavanger

elf
FRIGG FIELD

Job no.	Installation	System
	CDP 1	UNDERWATER
Scale 1:33	CONDUCTOR GUIDE N°21 CELL C SECONDARY FRAME LEVEL E	
Dwgr. no. FF 91.36.35.1388	1	

CDP 1 AS BUILT DRAWINGS

REFERENCE DRAWING LIST FOR:

ORIGINATOR	CONSTRUCTION DRAWING REF.	TITLE	Rev	Sheet	Size
C.G. DORIS	A1. MP. QF. 1079	SECONDARY FRAME FOR	1		A1.
		RULING OF THE CONDUCTOR			
		SELEEVE ZONE C.			

ELF DRAWING NUMBER	REVISION Index	REVISION Date	TITLE

Rev.	Date	DESCRIPTION	by	app.

Contractor

elf aquitaine norge a/s
p.o.box 168
4001 Stavanger

elf
FRIGG FIELD

Job no.	Installation CDP 1	System UNDERWATER
Scale		
Dwgr. no. FF 1388		

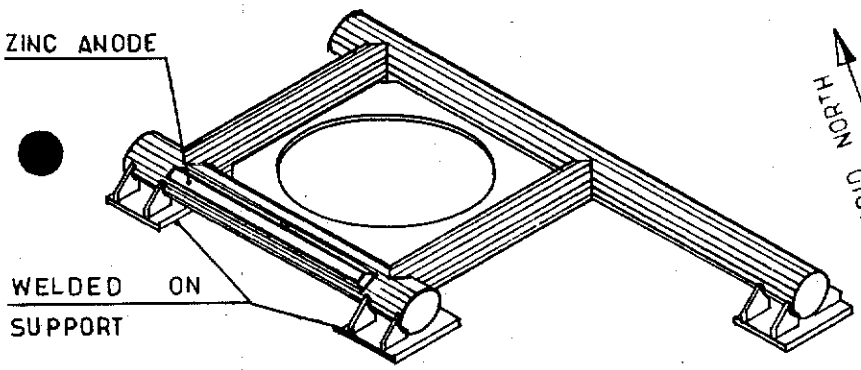

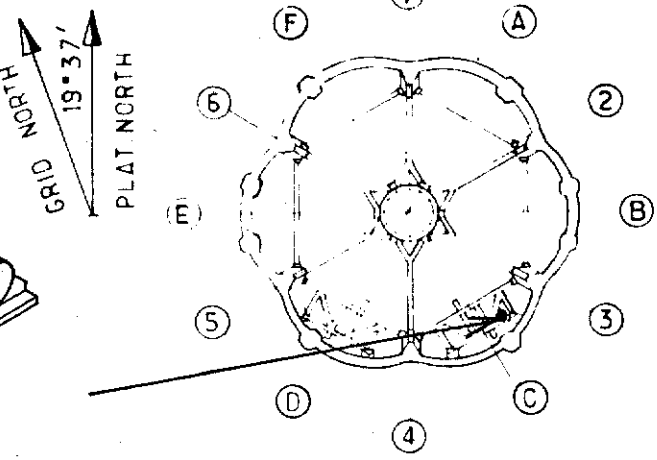

KEY PLAN

CONDUCTOR GUIDE N°22

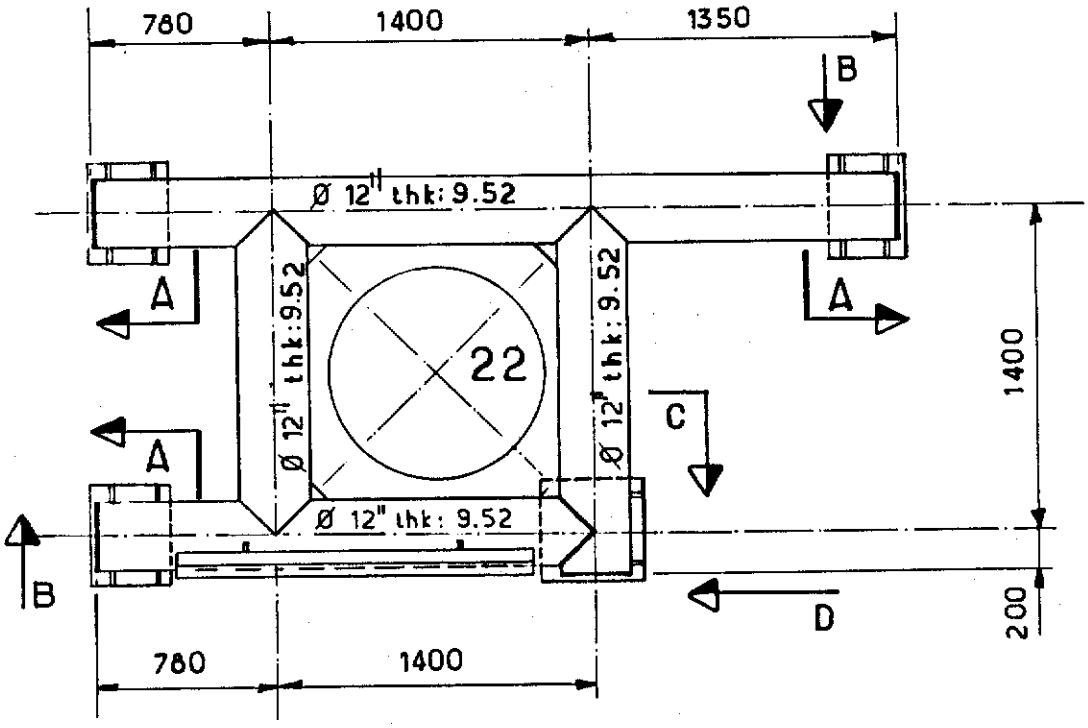

PLAN VIEW

SECTION A

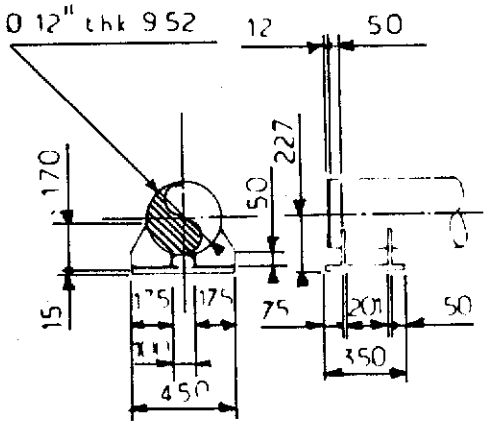

VIEW B

SECTION C

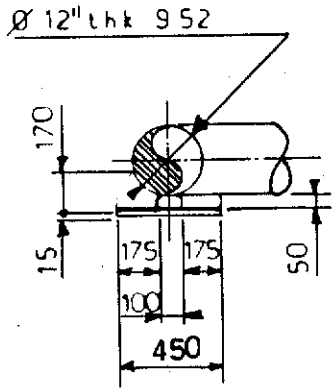

VIEW D

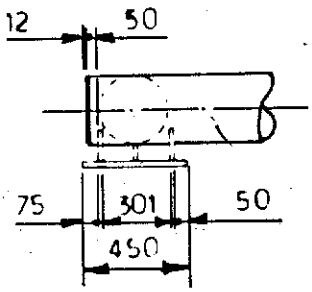

NOTES

FOR LOCATION SEE SK FF 91-36-35-1378
FOR CONDUCTOR SLEEVE SEE SK FF_91_36_35_1491.

FOR ZINC ANODE SEE SK FF 91-36-35-1587

Rev.	Date	DESCRIPTION	by	app
1	12.83	UP DATED	BVH	J/C

Contractor JVD 1029_40_59_

elf aquitaine norge a/s
p.o.box 168
4001 Stavanger

elf
FRIGG FIELD

Job no.	Installation	System
	CDP 1	UNDERWATER

Scale 1:33

CONDUCTOR GUIDE N°22 CELL C
SECONDARY FRAME LEVEL E

Dwgr. no FF 91_36_35_1389.

Rev. 1

CDP 1 AS BUILT DRAWINGS

REFERENCE DRAWING LIST FOR:

ORIGINATOR	CONSTRUCTION DRAWING REF.	TITLE	Rev	Sheet	Siz
C.G. DORIS	A1. MP. QF. 1080	SECONDARY FRAME FOR	1		A1.
		RULING OF THE CONDUCTOR			
		SELEEVE ZONE C.			

ELF DRAWING NUMBER	REVISION Index	REVISION Date	TITLE

Rev.	Date	DESCRIPTION	by	app.

Contractor

elf aquitaine norge a/s
p.o.box 168
4001 Stavanger

elf
FRIGG FIELD

Job no.	Installation	System
	CDP 1	UNDERWATER
Scale		
Dwgr. no. FF 1389		

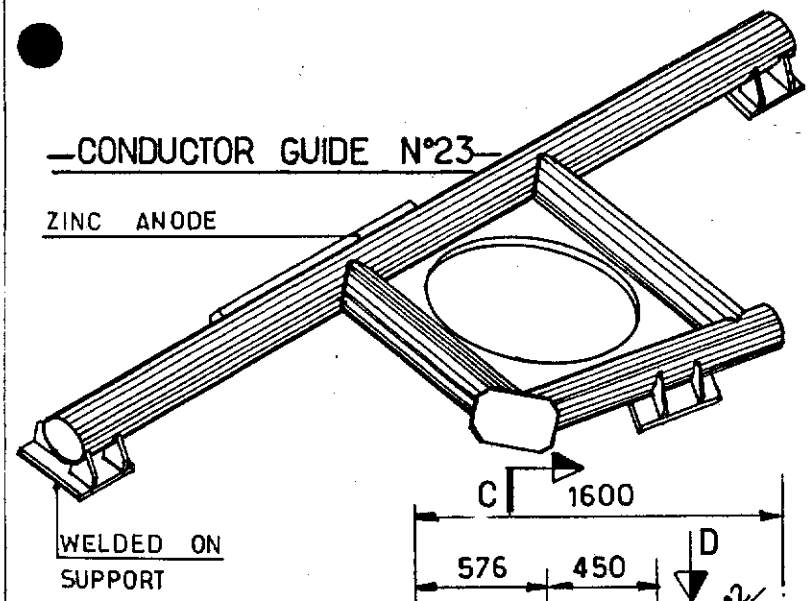

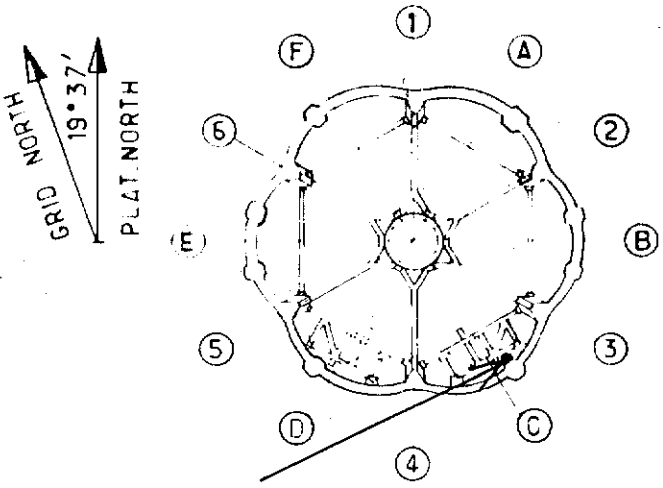

NOTES
FOR LOCATION SEE SK FF.91.36.35.1378
FOR CONDUCTOR SLEEVE SEE SK FF.91.36.35.1491
FOR ZINC ANODE SEE SK FF.91.36.35.1587

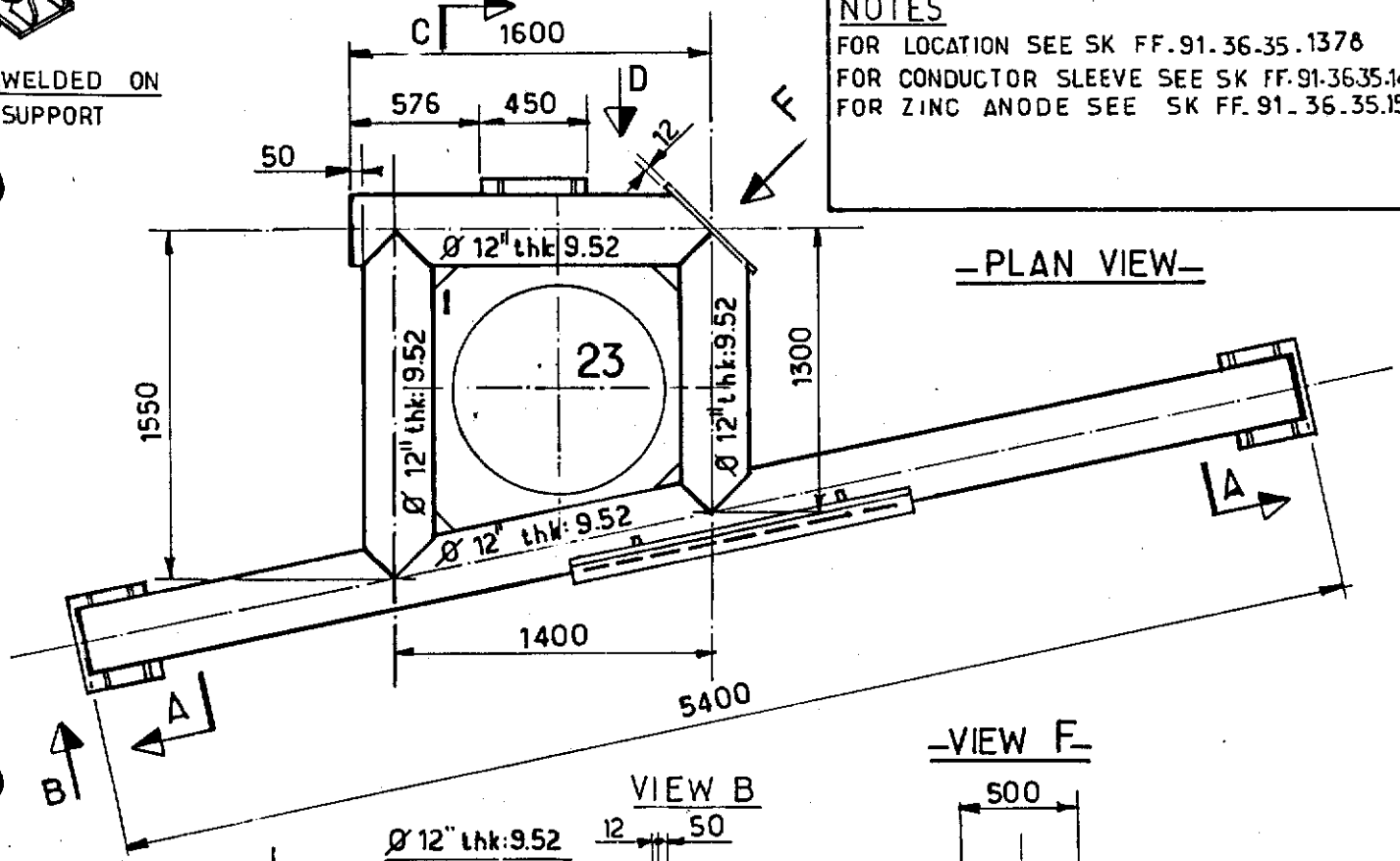

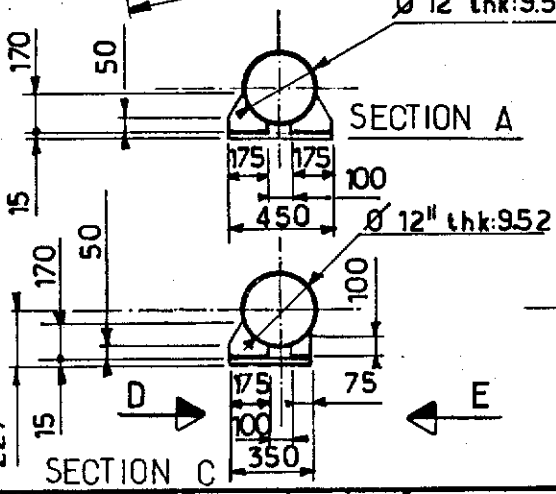

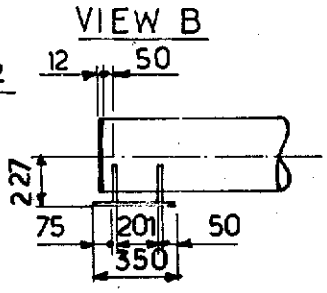

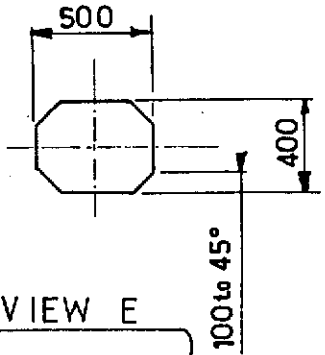

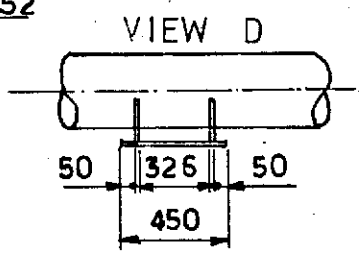

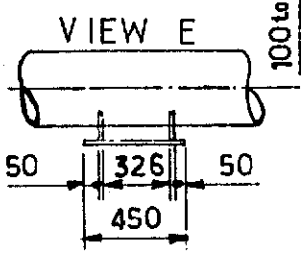

Rev.	Date	DESCRIPTION	by	app.
1	1283	UP DATED	BVH	HC

Contractor JVD 1029_40_60_

elf aquitaine norge a/s
p.o.box 168
4001 Stavanger

elf
FRIGG FIELD

Job no.	Installation	System
	CDP 1	UNDERWATER
Scale 1:33	CONDUCTOR GUIDE N°23 CELL C SECONDARY FRAME LEVEL E	
Dwgr. no FF 91_36_35_1390_		1

CDP 1 AS BUILT DRAWINGS

REFERENCE DRAWING LIST FOR:

ORIGINATOR	CONSTRUCTION DRAWING REF.	TITLE	Rev	Sheet
C.G. DORIS	AI. MP. QF. 1081	SECONDARY FRAME FOR RULING OF THE CONDUCTOR SELEEVE ZONE C.	2	

ELF DRAWING NUMBER	REVISION		TITLE
	Index	Date	

Rev.	Date	DESCRIPTION	by	app.

Contractor

elf aquitaine norge a/s
p.o.box 168
4001 Stavanger

elf

FRIGG FIELD

Job no.	Installation CDP 1	System UNDERWATER
Scale		
Dwgr. no. FF 1390		

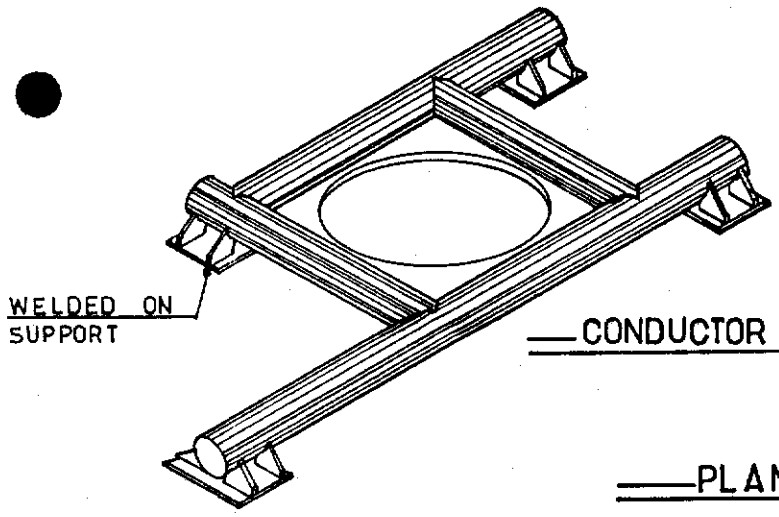

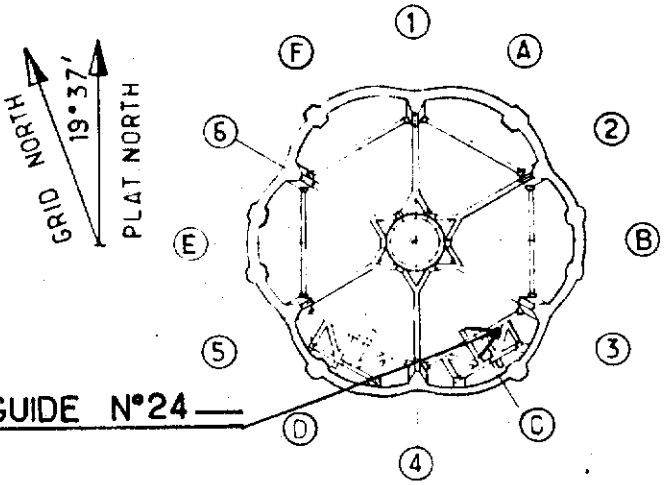

CONDUCTOR GUIDE N°24

KEY PLAN

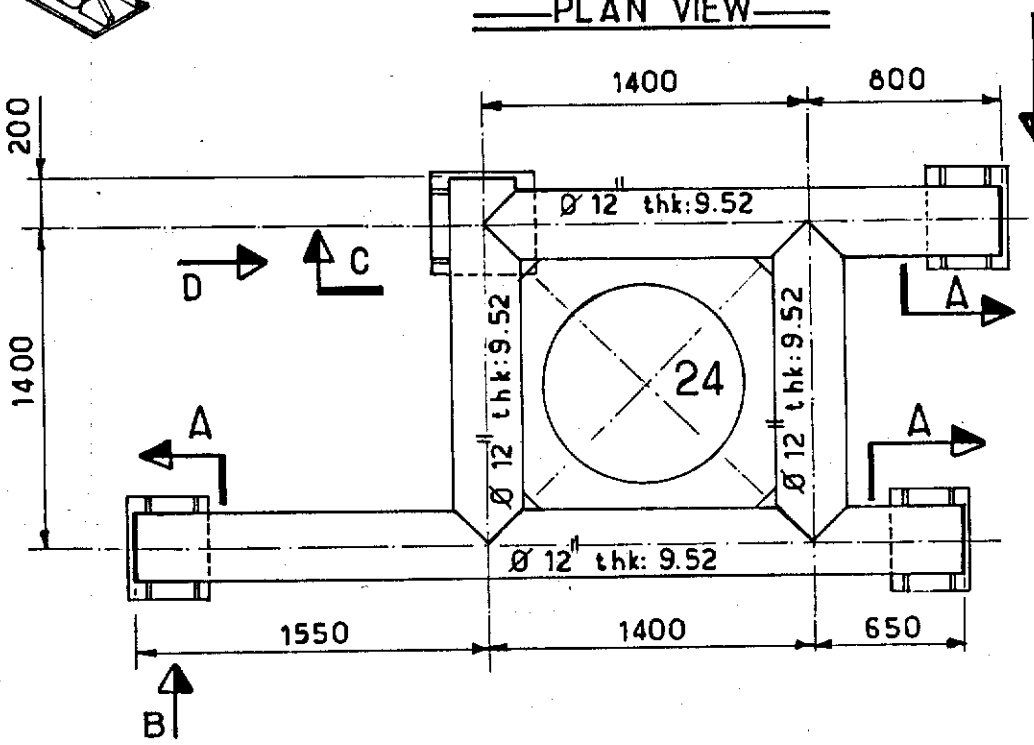

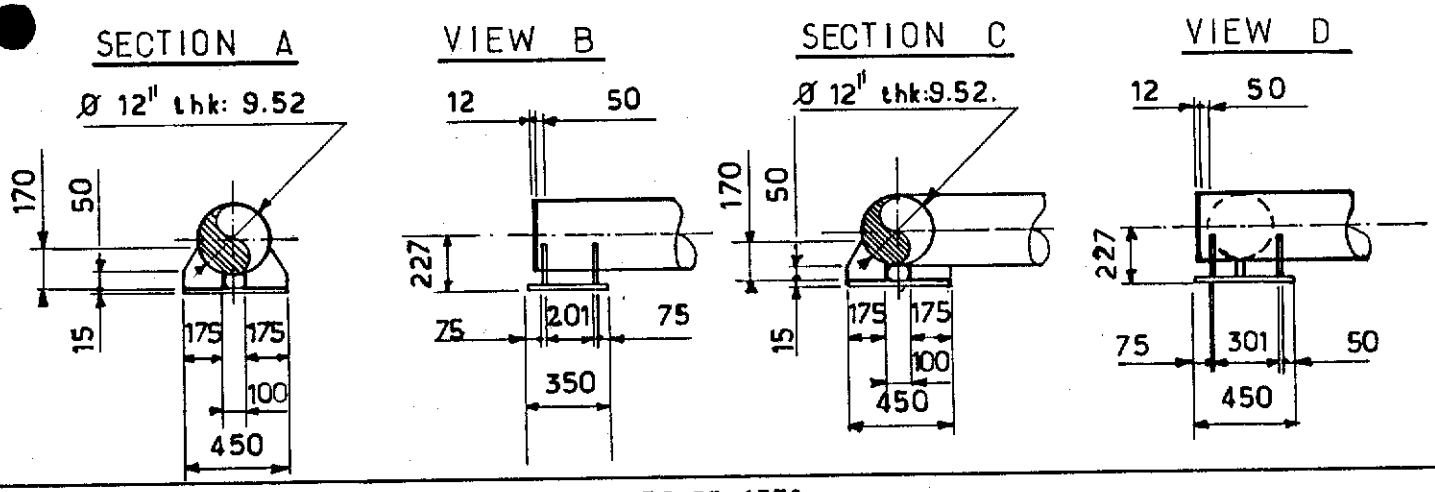

NOTES FOR LOCATION SEE SK FF 91_36_35_1378
FOR CONDUCTOR SLEEVE SEE SK FF_91_36_35_1491.

Rev.	Date	DESCRIPTION	by	app.
1	12.83	UP DATED	BV.H	J.LC

Contractor JVD 1029_40_61_

elf aquitaine norge a/s
p.o.box 168
4001 Stavanger

elf
FRIGG FIELD

Job no.	Installation	System
	CDP 1	UNDERWATER
Scale 1:33	CONDUCTOR GUIDE N°24 CELL C SECONDARY FRAME LEVEL E	
Dwgr. no. FF 91_36_35_1391_	No. 1	Sheet

CDP 1 AS BUILT DRAWINGS

REFERENCE DRAWING LIST FOR:

ORIGINATOR	CONSTRUCTION DRAWING REF.	TITLE	Rev	Sheet	Size
C.G. DORIS	A1. MP. QF. 1078	SECONDARY FRAME FOR	1		A1.
		RULING OF THE CONDUCTOR			
		SELEEVE ZONE C.			

ELF DRAWING NUMBER	REVISION Index	REVISION Date	TITLE

Rev.	Date	DESCRIPTION	by	app.

Contractor

elf aquitaine norge a/s
p.o.box 168
4001 Stavanger

elf
FRIGG FIELD

Job no.	Installation	System
	CDP 1	UNDERWATER
Scale		
Dwgr. no. FF ___ ___ 1391		

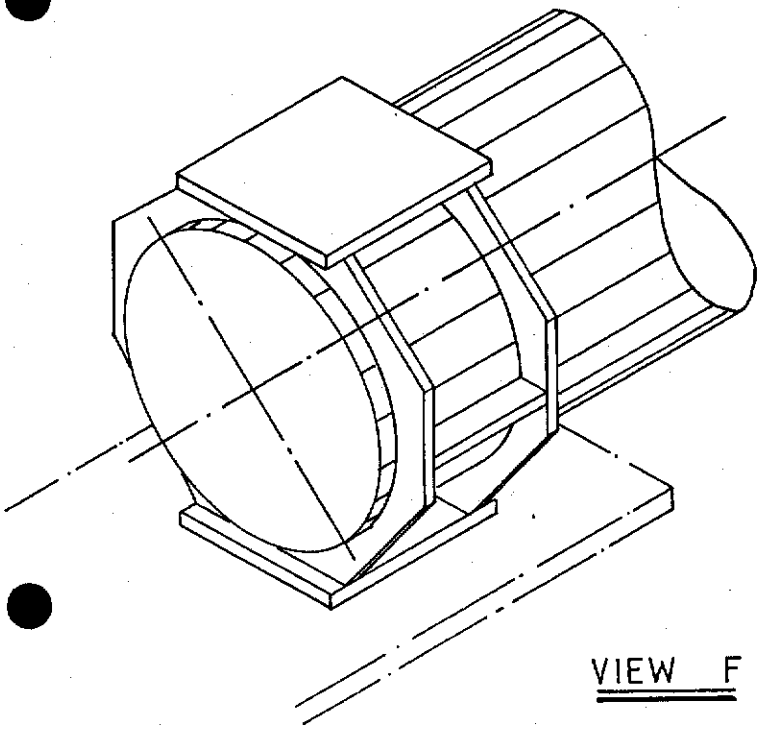

VIEW F

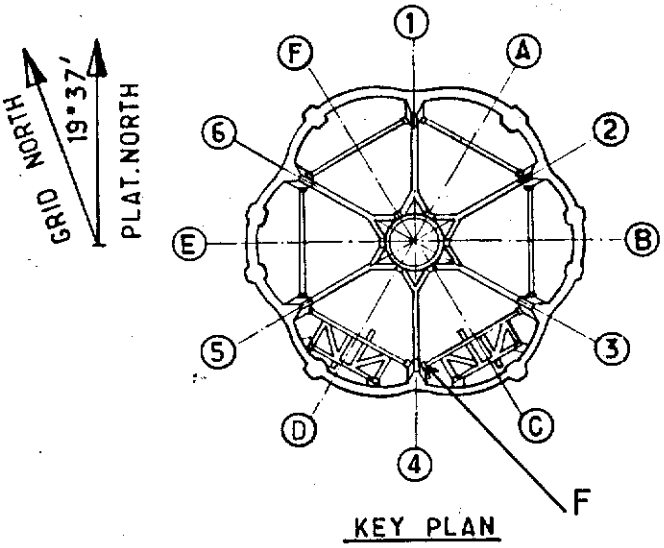

KEY PLAN

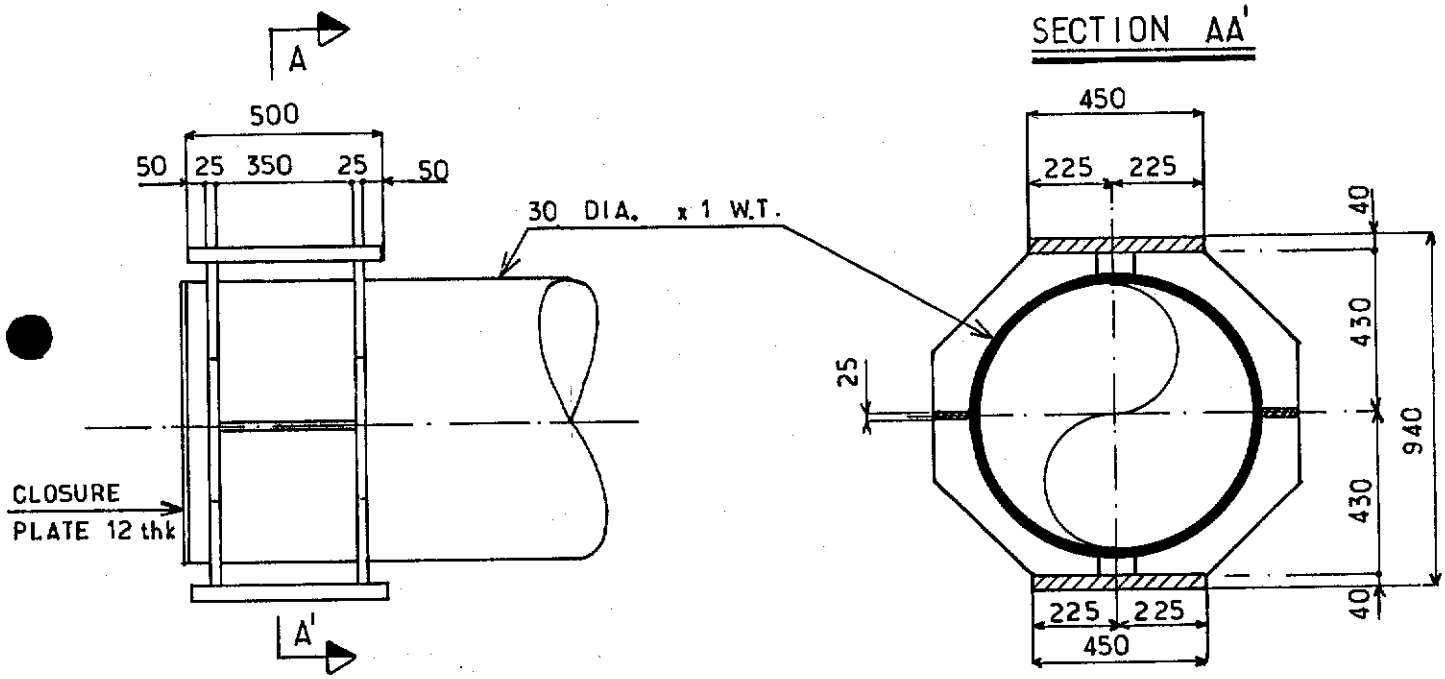

NOTES

FOR LOCATION SEE SK FF. 91. 36. 35. 1378.
FOR BOX FOR FREE LOCK SEE SK FF. 91.36.35. 1394.

Rev.	Date	DESCRIPTION	by	app.
1	12.83	UP DATED	BVH	J.L.C.

Contractor JVD 1029.40.62.

elf aquitaine norge a/s
p.o.box 168
4001 Stavanger

elf
FRIGG FIELD

Job no.	Installation	System
	CDP 1	UNDERWATER
Scale 1:20	FREE LOCK PIPE END EC1 CELL C LEVEL E	
Dwgr. no. FF 91·36·35·1392	Rev 1	Sheet /

Form 100 318

CDP 1 AS BUILT DRAWINGS

REFERENCE DRAWING LIST FOR:

ORIGINATOR	CONSTRUCTION DRAWING REF.	TITLE	Rev	Sheet	Size
C.G. DORIS	A1. MP. QF. 1188	PIPE END FOR FREE	1		A1
		LOCK OF GUIDE FRAME			
		Ø30". LEVEL E. CELL C			

ELF DRAWING NUMBER	REVISION Index	REVISION Date	TITLE

Rev.	Date	DESCRIPTION	by	app.

Contractor

elf aquitaine norge a/s
p.o.box 168
4001 Stavanger

elf
FRIGG FIELD

Job no.	Installation	System
	CDP 1	UNDERWATER
Scale		
Dwgr. no. FF ___ ___ 1392	Rev.	Sheet /

Form 100 318

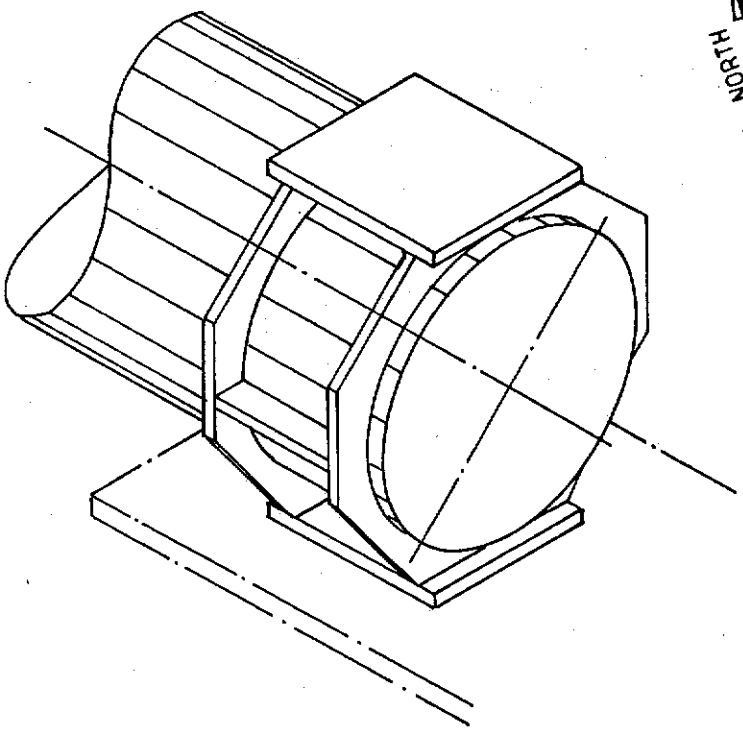

VIEW F

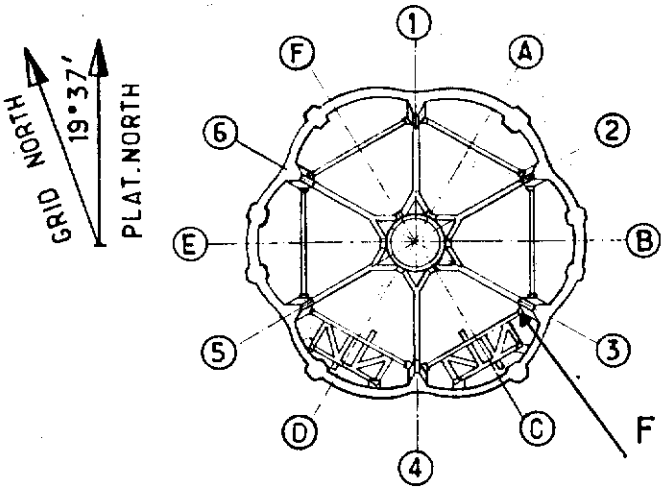

KEY PLAN

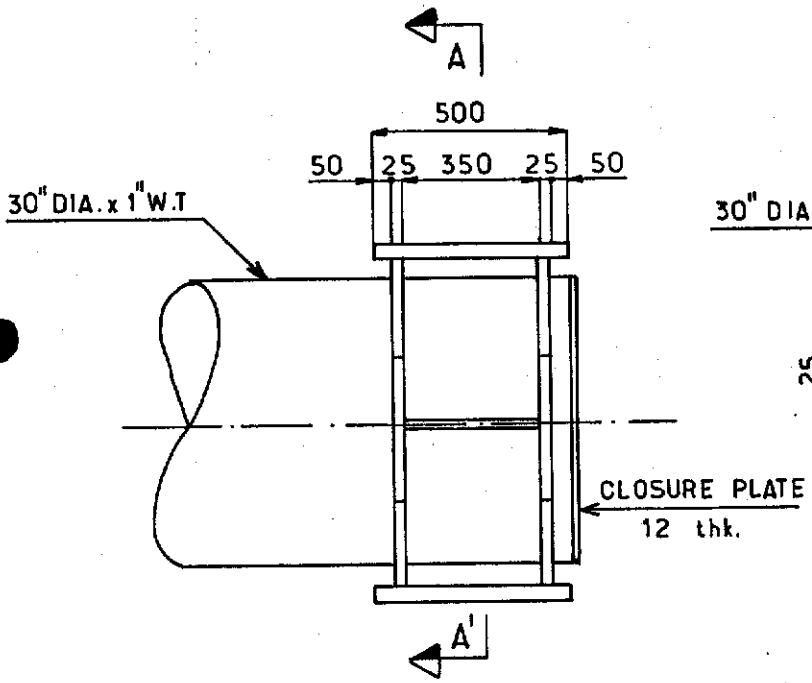

SECTION AA'

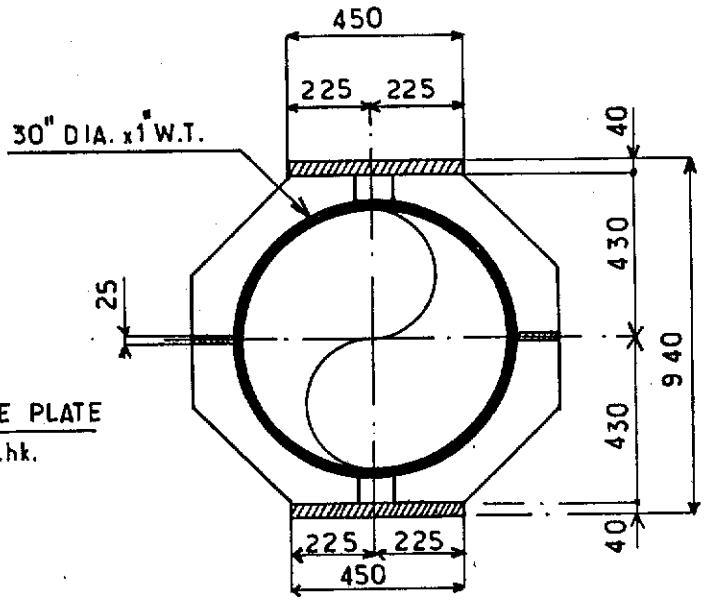

NOTES

FOR LOCATION SEE SK FF. 91. 36. 35. 1378
FOR BOX FOR FREE LOCK SEE SK FF. 91. 36. 35. 1395.

Rev.	Date	DESCRIPTION	by	app.
1	12.83	UP DATED	BVH	J.L.C

Contractor JVD 1029 40 63

elf aquitaine norge a/s
p.o.box 168
4001 Stavanger

elf
FRIGG FIELD

Job no.	Installation	System
	CDP 1	UNDERWATER
Scale 1:20	FREE LOCK PIPE END EC4 CELL C LEVEL E	
Dwgr. no. FF 91·36·35·1393	Rev 1	Sheet /

Form 100 318

CDP 1 AS BUILT DRAWINGS

REFERENCE DRAWING LIST FOR:

ORIGINATOR	CONSTRUCTION DRAWING REF.	TITLE	Rev	Sheet	Size
CG. DORIS	A1. MP. QF. 1188	PIPE END FOR FREE	1		A1
		LOCK OF GUIDE FRAME			
		Ø30". LEVEL E. CELL C			

ELF DRAWING NUMBER	REVISION Index	REVISION Date	TITLE

Rev.	Date	DESCRIPTION	by	app.

Contractor

elf aquitaine norge a/s
p.o.box 168
4001 Stavanger

elf

FRIGG FIELD

Job no.	Installation	System
	CDP 1	UNDERWATER
Scale		
Dwgr. no. FF 1393	Rev.	Sheet 1

Form 100 318

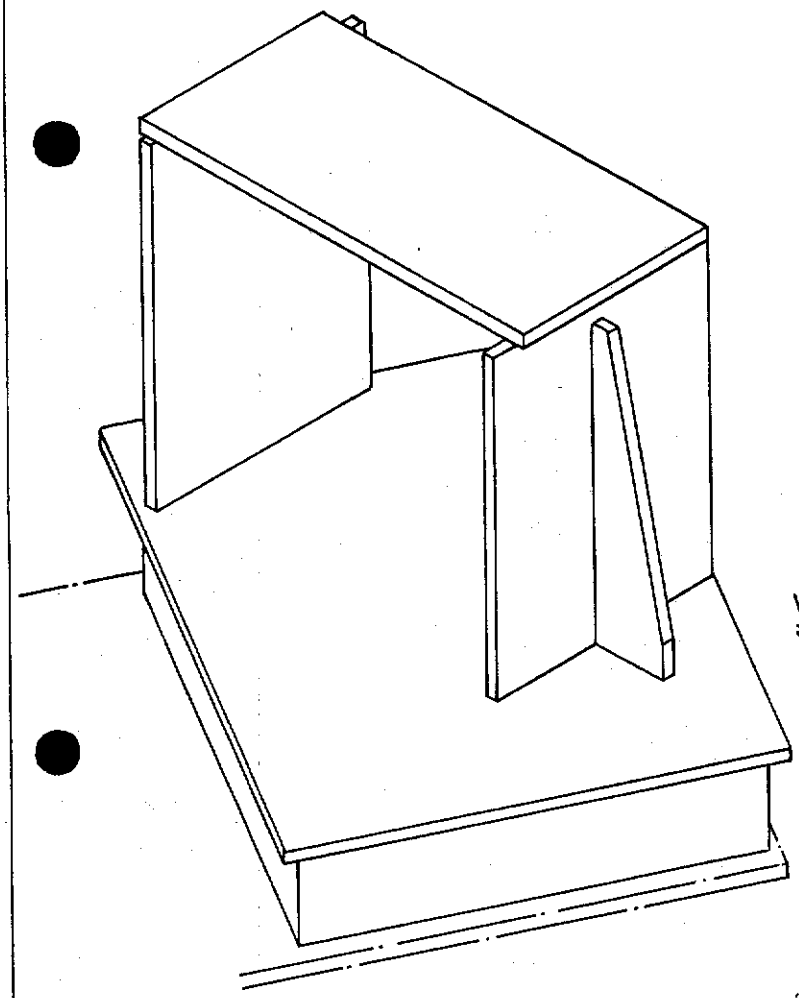

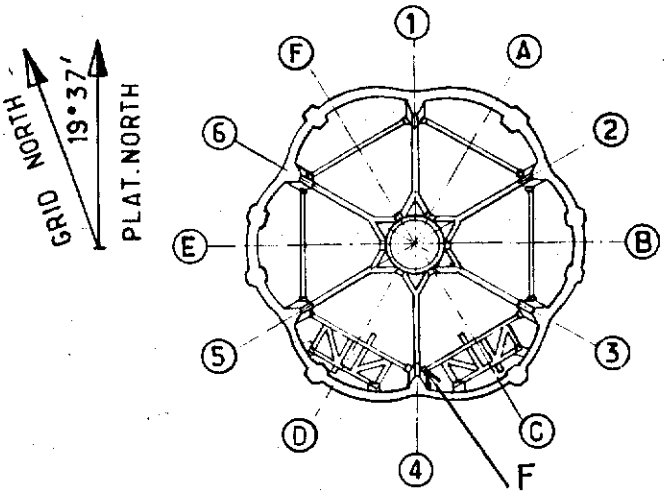

KEY PLAN

VIEW F

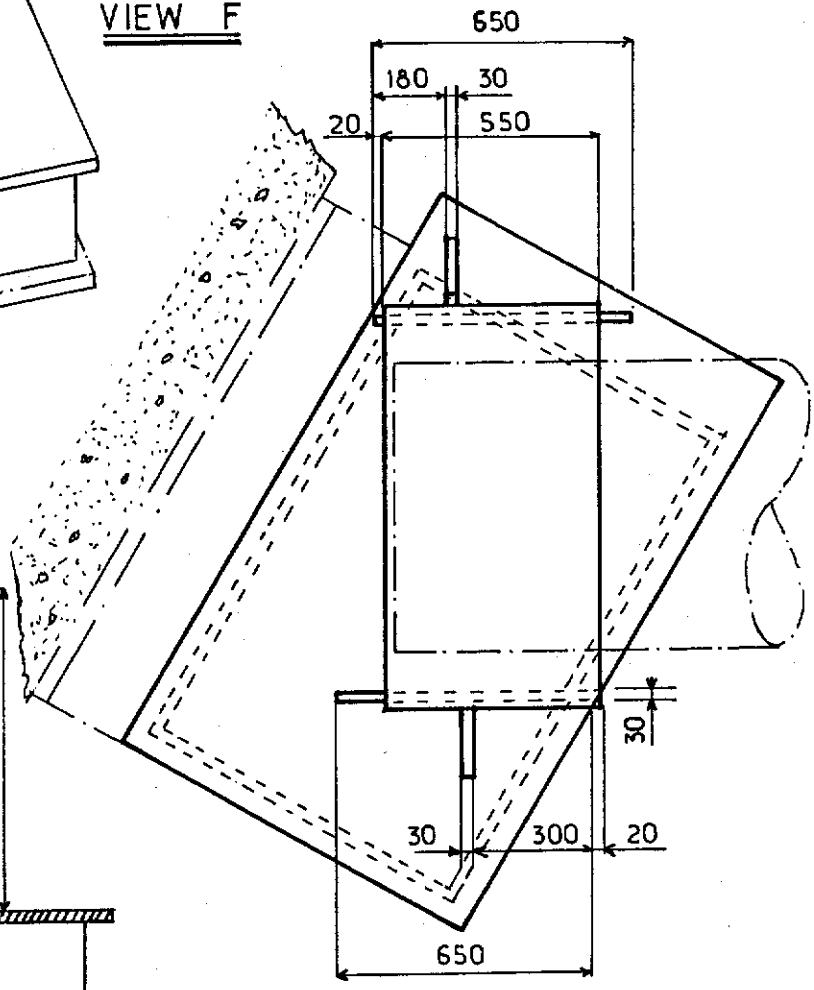

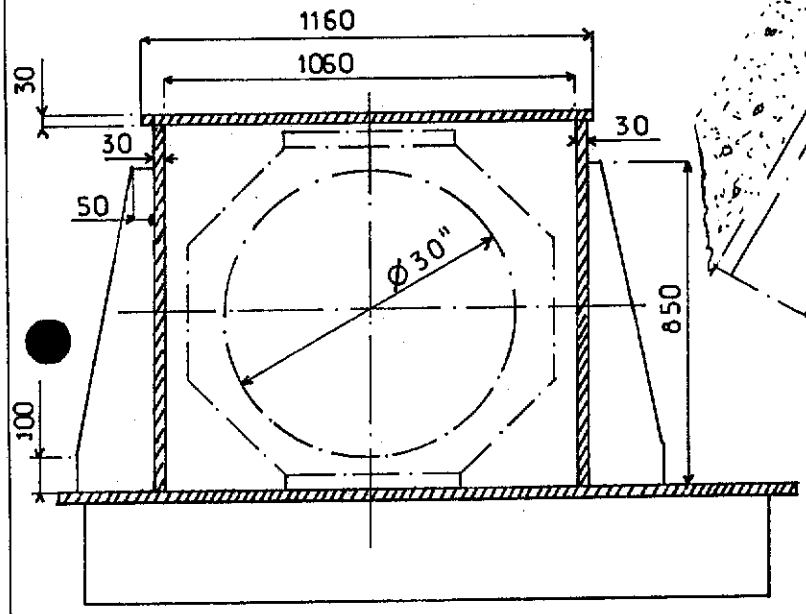

SECTION AA'

NOTES

FOR LOCATION SEE SK FF_91_36_35_1378.

FOR DETAIL OF FREE LOCK PIPE END SEE SK FF_91_36_35_1392.

Rev.	Date	DESCRIPTION	by	app.
1	12.83	UP DATED	B.VH	JLC

Contractor JVD 1029 40 64

elf aquitaine norge a/s
p.o.box 168
4001 Stavanger

elf
FRIGG FIELD

Job no.	Installation	System
	CDP 1	UNDERWATER
Scale 1:20	BOX FOR FREE LOCK EC1 CELL C LEVEL E	
Dwgr. no. FF 91·36·35·1394	Rev 1	Sheet

CDP 1 AS BUILT DRAWINGS

REFERENCE DRAWING LIST FOR:

ORIGINATOR	CONSTRUCTION DRAWING REF.	TITLE	Rev	Sheet	Size
- C G. DORIS.	A1. MP. QF. 1240	BOX FOR FREE LOCK.	1		A1
		ZONE C . LEVEL E .			

ELF DRAWING NUMBER	REVISION Index	REVISION Date	TITLE

Rev.	Date	DESCRIPTION	by	app.

Contractor

elf aquitaine norge a/s
p.o.box 168
4001 Stavanger

elf
FRIGG FIELD

Job no.	Installation CDP 1	System UNDERWATER
Scale	BOXE FOR FREE LOCK EC1	
Dwgr. no. FF 1394	Rev.	Sheet /

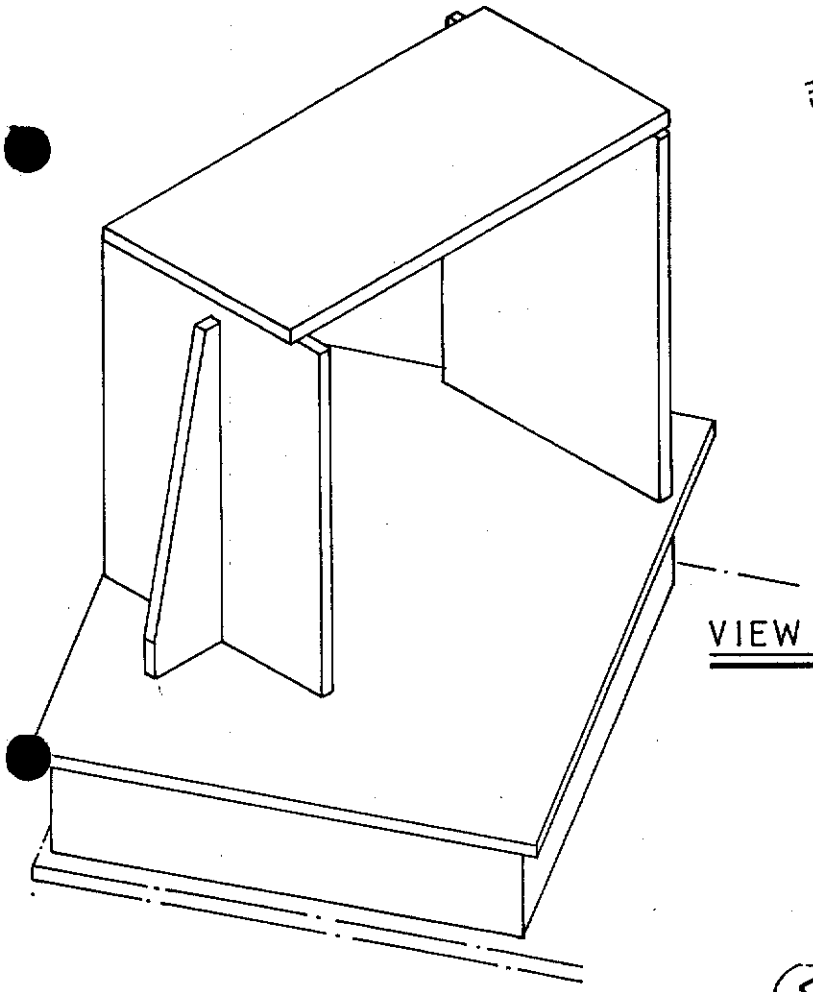

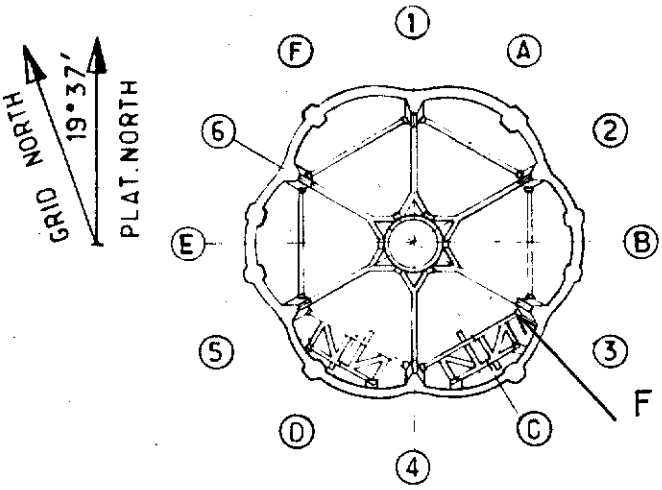

KEY PLAN

VIEW F

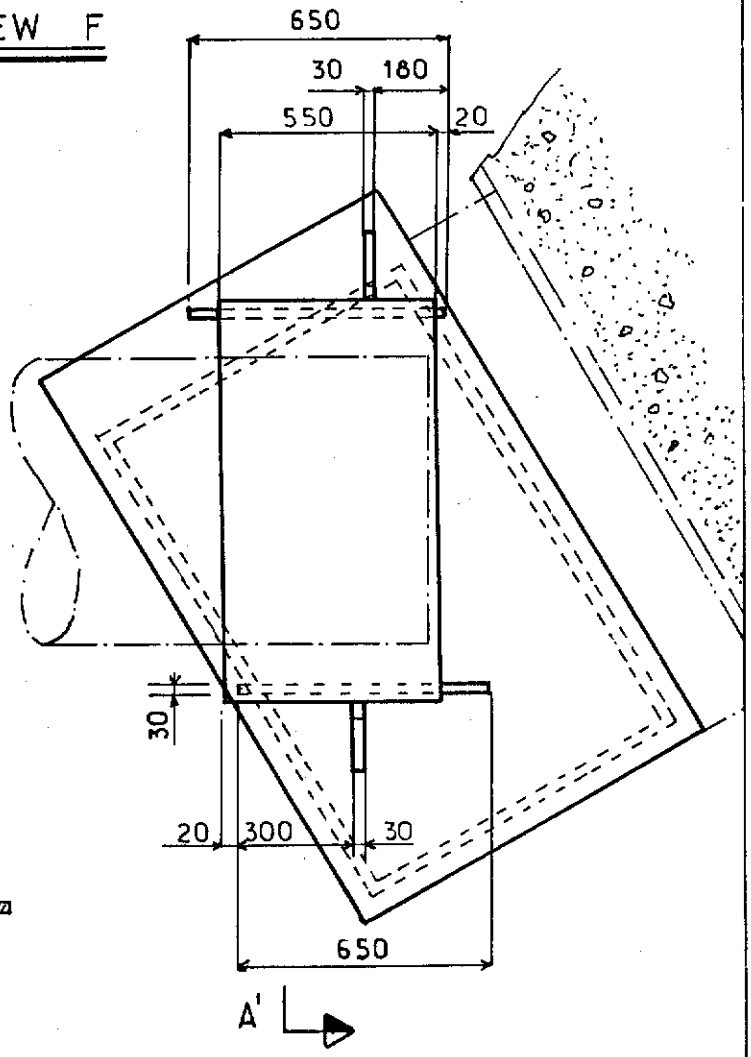

SECTION AA'

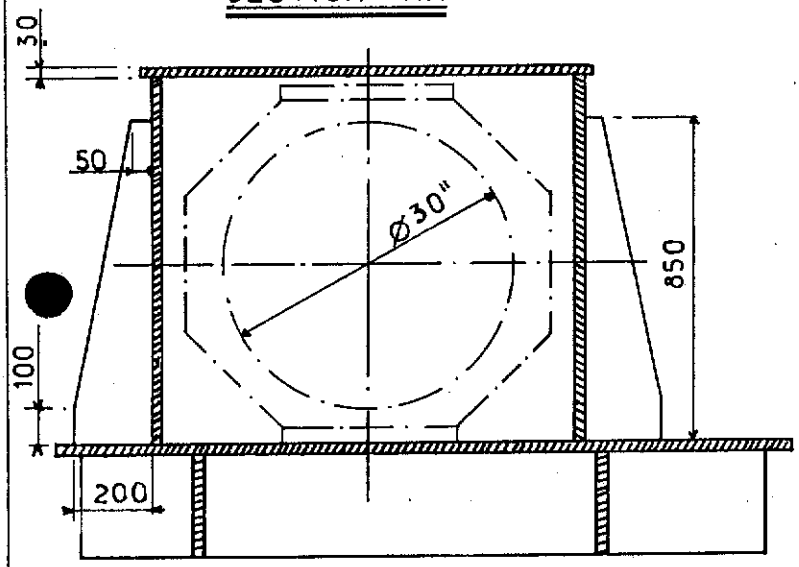

NOTES

FOR LOCATION SEE SK FF_91_36_35_1378.

FOR DETAIL OF FREE LOCK PIPE END SEE SK FF_91_36_35_1393.

Rev.	Date	DESCRIPTION	by	app.
	12.83	UP DATED	BVH	

Contractor JVD 1029_40_65_

elf aquitaine norge a/s
p.o.box 168
4001 Stavanger

elf
FRIGG FIELD

Job no.	Installation	System
	CDP 1	UNDERWATER
Scale 1:20	BOX FOR FREE LOCK EC4 CELL C LEVEL E	
Dwgr. no. FF 91·36·35·1395	Rev. 1	Sheet

CDP 1 AS BUILT DRAWINGS

REFERENCE DRAWING LIST FOR:

ORIGINATOR	CONSTRUCTION DRAWING REF.	TITLE	Rev	Sheet	Size
- C G. DORIS.	A1. MP. QF. 1240.	BOX FOR FREE LOCK.	1		A1
		ZONE C . LEVEL E .			

ELF DRAWING NUMBER	REVISION Index	REVISION Date	TITLE

Rev.	Date	DESCRIPTION	by	app.

Contractor

elf aquitaine norge a/s
p.o.box 168
4001 Stavanger

elf
FRIGG FIELD

Job no.	Installation CDP 1	System UNDERWATER
Scale	BOXE FOR FREE LOCK EC4	
Dwgr. no. FF 1395	Rev.	Sheet /

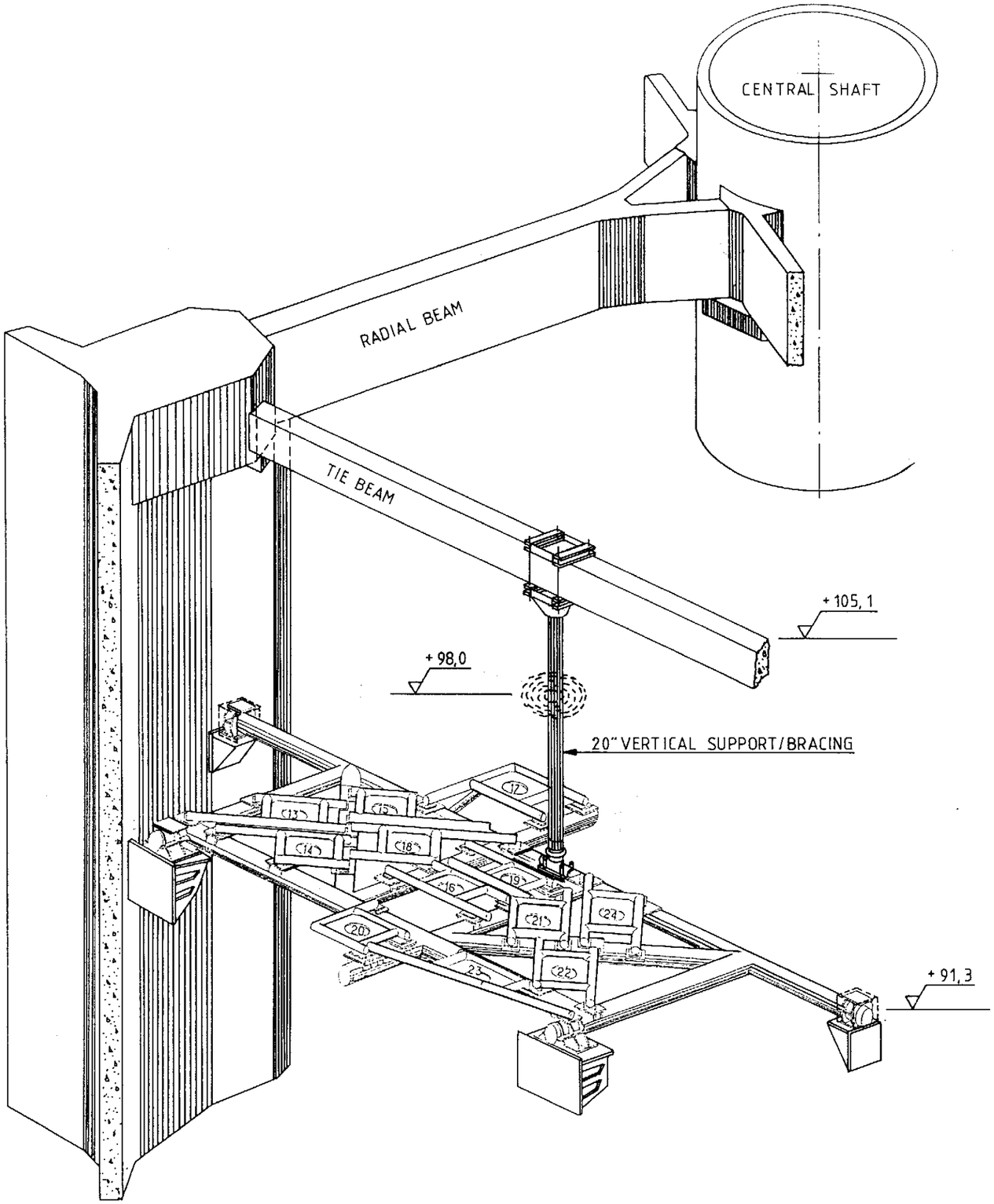

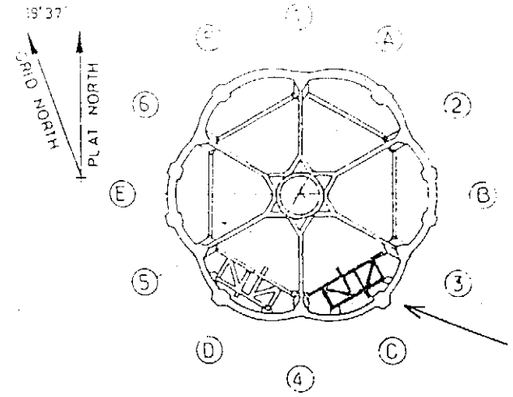

REF. DRG.
FF 91 36 35 1397 GENERAL VIEW OF VERTICAL BRACING IN CELL C. LEVEL E.
FF 91 36 35 1418 GENERAL VIEW OF VERTICAL BRACING IN CELL D. LEVEL E.

Rev.	Date	DESCRIPTION	By	app.
0	20.2.86	First issue	T.B.	

Contractor

elf aquitaine norge a/s
P.O. Box 168
4001 Stavanger

FRIGG FIELD

Installation: CDP1
System: UNDERWATER
Job no.
Scale: NONE

OVERALL VIEW OF THE ADDITIONAL BRACING IN CELL C. SAME FOR CELL D.

Drwg. no. FF 91 36 35 1396
Rev 0
Sheet /

A3 Form 100 314

CDP 1 AS BUILT DRAWINGS

REFERENCE DRAWING LIST FOR:

ORIGINATOR	CONSTRUCTION DRAWING REF.	TITLE	Rev	Sheet	Size
Bjørge Engineering	FF 91 36 35 1840	Drawing list, Cell D			
	FF 91 36 35 1841	General arrangement, Cell D			
	FF 91 36 35 1842	Upper clamp, cell D			
	FF 91 36 35 1843	Lower clamp, cell D			
	FF 91 36 35 1844	Detail 1, 2, 3, 4 & 5 Cell D			
	FF 91 36 35 1845	Detail 6, Cell D			
	FF 91 36 35 1846	Detail 7, Cell D			
	FF 91 36 35 1847	Anodes, Cell D			
	FF 91 36 35 1848	Drawing list, Cell C			
	FF 91 36 35 1849	General arrangement, Cell C			
	FF 91 36 35 1850	Upper clamp, Cell C			
	FF 91 36 35 1851	Lower clamp, Cell C			
	FF 91 36 35 1852	Detail 1, 2, 3, 4 & 5 Cell C			
	FF 91 36 35 1853	Detail 6, Cell C			
	FF 91 36 35 1854	Detail 7, Cell C			
	FF 91 36 35 1855	Anodes, Cell C			

ELF DRAWING NUMBER	REVISION Index	REVISION Date	TITLE
FF 91 36 35 1856			Grease cup for protection of bolt ends, lower clamp

Rev.	Date	DESCRIPTION	by	app.

Contractor

elf aquitaine norge a/s
p.o.box 168
4001 Stavanger

elf
FRIGG FIELD

Job no.	Installation	System
	CDP 1	UNDERWATER
Scale		
Dwgr. no. FF 1396	Rev 0	Sheet 1

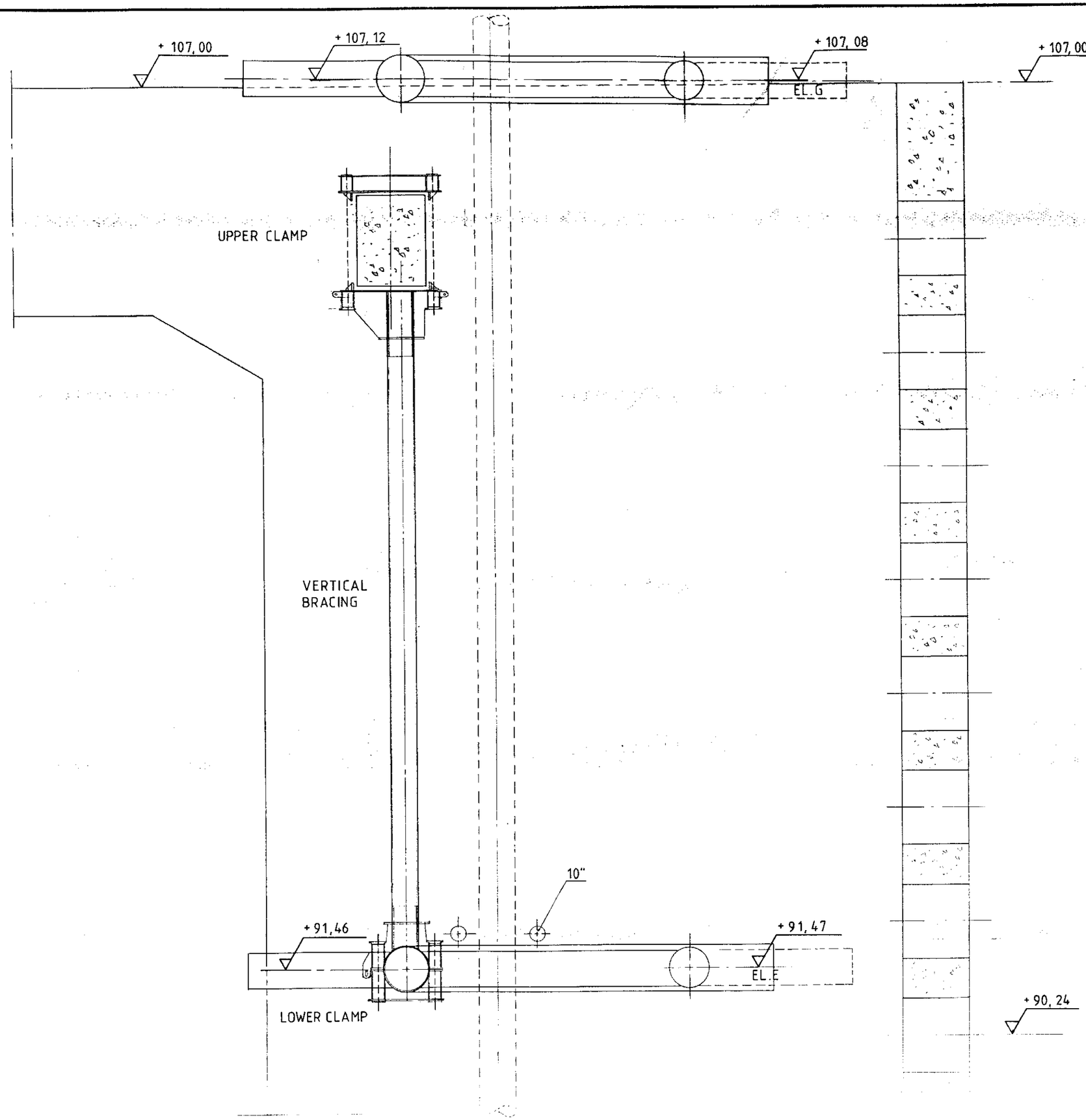

REF. DRG.
FF 91 36 35 1396 VERTICAL BRACING INSTALLATION, ISOMETRIC VIEW.

rev.	date	DESCRIPTION	by	app.
0	20.2.86	first issue	T.B.	

elf aquitaine norge as p.o.box 168 – 4001 Stavanger

elf

Installation: CDP 1
System: UNDERWATER

GENERAL VIEW OF VERTICAL BRACING IN CELL C LEVEL E

Scale: 1 : 50

FRIGG FIELD

FF 91 36 35 1397 0

CDP 1 AS BUILT DRAWINGS

REFERENCE DRAWING LIST FOR:

ORIGINATOR	CONSTRUCTION DRAWING REF.	TITLE	Rev	Sheet	Size
Bjørge Engineering	FF 91 36 35 1848	Drawing list Cell C			
— " —	FF 91 36 35 1849	General arrangement Cell C			
— " —	FF 91 36 35 1850	Upper Clamp Cell C			
— " —	FF 91 36 35 1851	Lower Clamp Cell C			
— " —	FF 91 36 35 1852	Detail 1,2,3,4 & 5 Cell C			
— " —	FF 91 36 35 1853	Detail 6 Cell C			
— " —	FF 91 36 35 1854	Detail 7 Cell C			
— " —	FF 91 36 35 1855	Anodes Cell C			

ELF DRAWING NUMBER	REVISION Index	REVISION Date	TITLE
FF 91 36 35 1856			Grease cup for protection of bolt ends, lower clamp

Rev.	Date	DESCRIPTION	by	app.

Contractor

elf aquitaine norge a/s
p.o.box 168
4001 Stavanger

elf

FRIGG FIELD

Job no.	Installation	System
	CDP 1	UNDERWATER
Scale		
Dwgr. no. FF 1397	Rev 0	Sheet 1

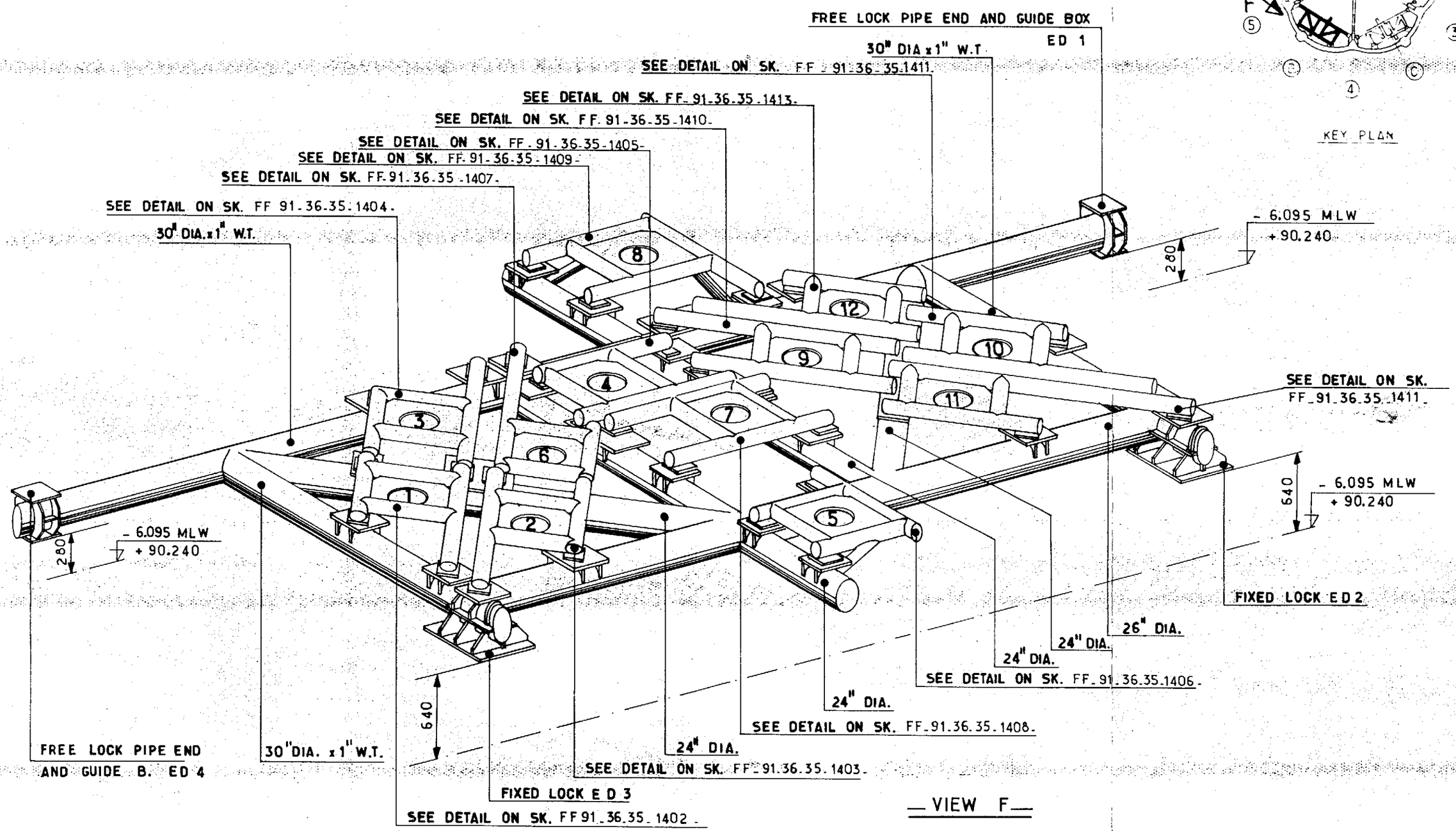

NOTES

FOR FREE LOCK PIPE ENDS AND GUIDE BOXES SEE SK FF 91 36 35 1414/1415/1416/1417.
FOR REPAIR OF GUIDE FRAME SUPPORTS, SEE FF 91 36 35 1396
FOR INST. OF SHEAR KEY BOLTS ON ED 2, SEE FF 91 36 35 1419

Rev.	Date	DESCRIPTION	by	app.
2	21.2.86	NOTE ADDED	T.B.	
1	12.83	UP DATED	BVH	JLC

Contractor JVD_1029_40_70.

elf aquitaine norge a s
p.o box 168
4001 Stavanger

elf
FRIGG

Job no.	Installation	System
	CDP 1	UNDERWATER
Scale —	GENERAL VIEW OF CONDUCTOR GUIDE FRAME CELL D LEVEL E	
Dwgr no	FF_91_36_35_1400.	2

CDP 1 AS BUILT DRAWINGS

REFERENCE DRAWING LIST FOR: CONDUCTOR GUIDE FRAME

ORIGINATOR	CONSTRUCTION DRAWING REF.	TITLE	Rev	Sheet	Size
GUIANDORIS	A0. MP. ØF 1043	WORKING DRAWING AND CUTTING OUT OF GUIDE FRAME Ø 30"	1		A0
" "	A1. MP ØF 1104	GENERAL LAYOUT OF THE GUIDE FRAME	1		A1
" "	A1 MP ØF 1105	GENERAL LAYOUT OF THE BASE PLATES	1		A1
" "	A1 MP ØF 1111	POSITION OF DRILLING HOLES	2		A1
" "	A1 MP ØF 1179	FIXED LOCK FOR GUIDE FRAME Ø 30" ED I	3		A1
" "	A1 MP ØF 1180	FIXED LOCK FOR GUIDE FRAME Ø 30" ED II	3		A1
" "	A1 MP ØF 1161	PIPE END OF GUIDE FRAME	1		A1
" "	A1 MP ØF 1137	PIPE END FOR FREE LOCK	1		A1
" "	A1 MP ØF 1242	BOX FOR FREE LOCK	1		A1

ELF DRAWING NUMBER	REVISION Index	REVISION Date	TITLE

Rev	Date	DESCRIPTION	by	app.

tor

elf aquitaine norge a/s
p.o.box 168
4001 Stavanger

elf
FRIGG FIELD

Job no.	Installation	System
	CDP 1	UNDERWATER
Scale		
Dwgr. no. FF 1400	Rev.	Sheet /

Form 100 318

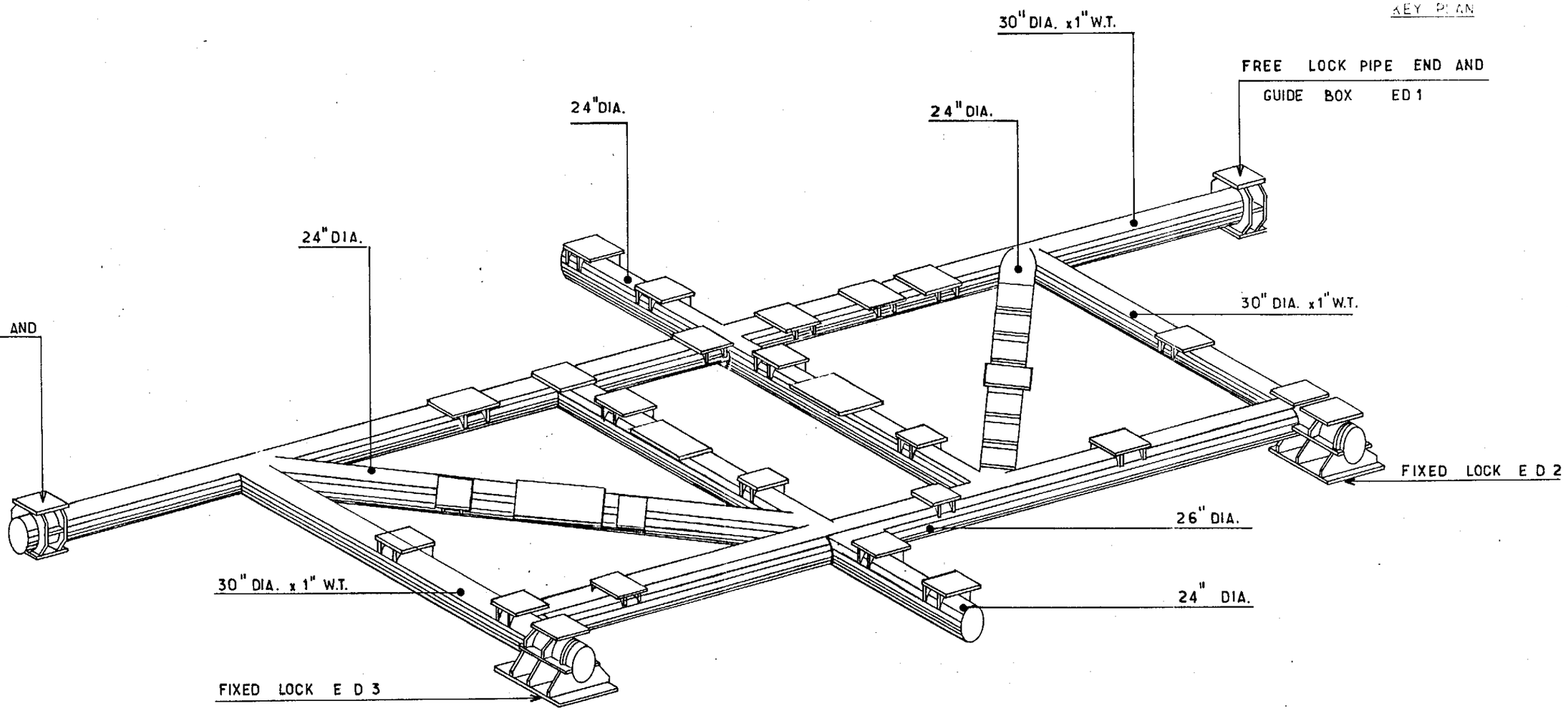

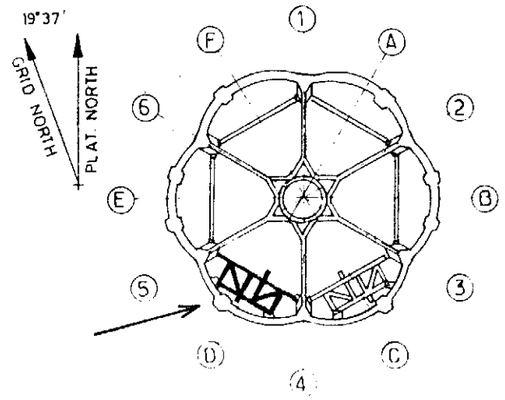

KEY PLAN

NOTES

FOR SECONDARY FRAME DETAILS SEE SK FF.91.36.35.1402. TO FF.91.36.35.1413.
FOR FREE LOCK PIPE ENDS AND GUIDE BOXES SEE SK FF.91.36.35.1414/1415/1416/1417.

Rev.	Date	DESCRIPTION	by	app.
1	12.83	UP DATED	BVH	JLC

Contractor JVD 1029.40.71.

elf aquitaine norge a/s
p.o.box 168
4001 Stavanger

elf
FRIGG FIELD

Job no.	Installation	System
	CDP 1	UNDERWATER
Scale —	GENERAL VIEW OF SECONDARY FRAME SUPPORT CELL D LEVEL E	
Dwgr. no FF 91-36-35-1401-	1	—

CDP 1 AS BUILT DRAWINGS

REFERENCE DRAWING LIST FOR:

ORIGINATOR	CONSTRUCTION DRAWING REF.	TITLE	Rev	Sheet	Size
C.G. DORIS	A1.MP.QF.1105	GENERAL LAYOUT OF THE	1		A1
		BASE PLATES			
		LEVEL E CELL D			
" "	A1.MP.QF.1147	DETAIL OF BASE PLATE	1		A1
" "	A1.MP.QF.1148	" " " "	1		A1
" "	A1.MP.QF.1149	" " " "	1		A1
" "	A1.MP.QF.1154	" " " "	1		A1

ELF DRAWING NUMBER	REVISION Index	REVISION Date	TITLE

Rev.	Date	DESCRIPTION	by	app.

Contractor

elf aquitaine norge a/s
p.o.box 168
4001 Stavanger

elf

FRIGG FIELD

Job no.	Installation	System
	CDP 1	UNDERWATER
Scale		
Dwgr. no. FF ___ ___ 1401	Rev.	Sheet /

Form 100 318

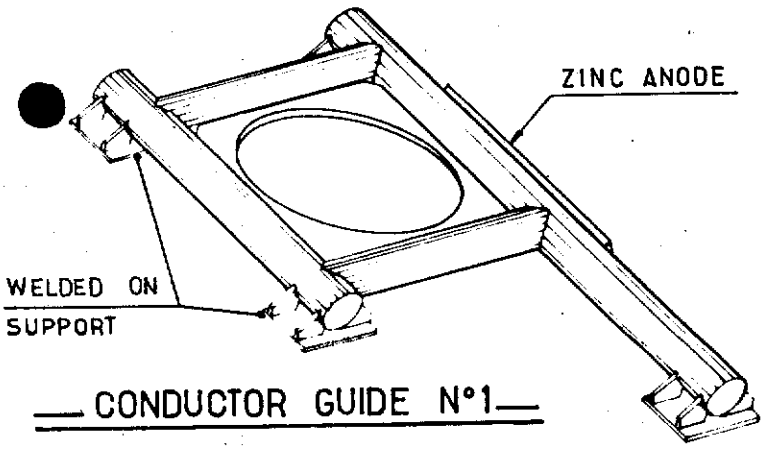

CONDUCTOR GUIDE N°1

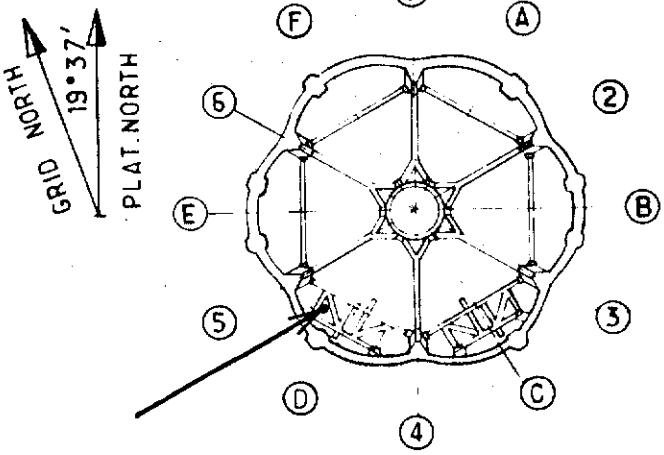

KEY PLAN

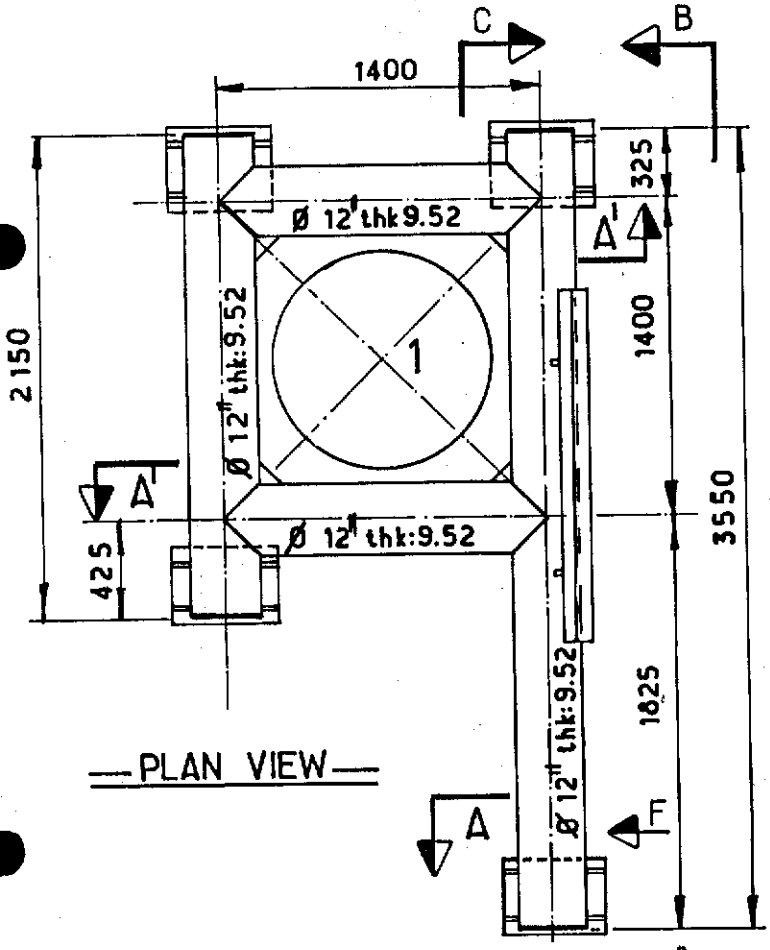

PLAN VIEW

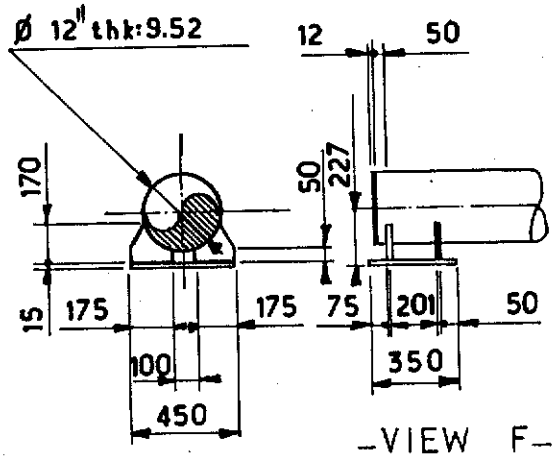

SECTION A

VIEW F

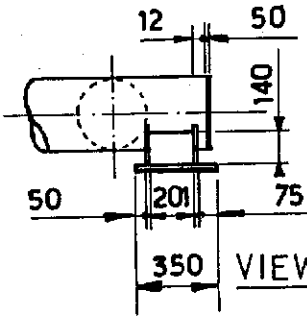

VIEW B

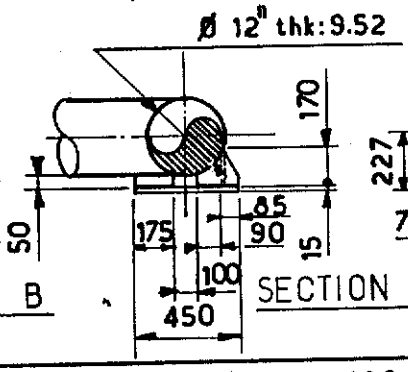

SECTION A'

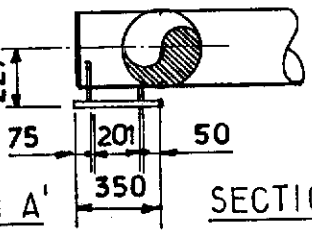

SECTION C

NOTES:
FOR LOCATION SEE SK FF. 91.36.35.1400
FOR CONDUCTOR SLEEVE SEE SK FF. 91.36.35.1491.
FOR ZINC ANODE SEE SK. FF 91-36-35-1587

Rev.	Date	DESCRIPTION	by	app.
1	12.83	UP DATED	B.V.H	J.L.C

Contractor JVD 1029_40. 72.

elf aquitaine norge a/s
p.o.box 168
4001 Stavanger

elf
FRIGG FIELD

Job no.	Installation	System
	CDP 1	UNDERWATER
Scale 1:33	CONDUCTOR GUIDE N°1 CELL D SECONDARY FRAME LEVEL E	
Dwgr. no. FF 91.36.35.1402	Rev. 1	Sheet /

CDP 1 AS BUILT DRAWINGS

REFERENCE DRAWING LIST FOR:

ORIGINATOR	CONSTRUCTION DRAWING REF.	TITLE	Rev	Sheet	Size
C.G. DORIS	A1. MP. QF. 1082	SECONDARY FRAME FOR	1		A1.
		RULING OF THE CONDUCTORS			
		SLEEVE ZONE D.			

ELF DRAWING NUMBER	REVISION Index	REVISION Date	TITLE

Rev.	Date	DESCRIPTION	by	app.

Contractor

elf aquitaine norge a/s
p.o.box 168
4001 Stavanger

elf
FRIGG FIELD

Job no.	Installation	System
	CDP 1	UNDERWATER
Scale		
Dwgr. no. FF ___ ___ 1402	Rev	Sheet /

Form 100 318

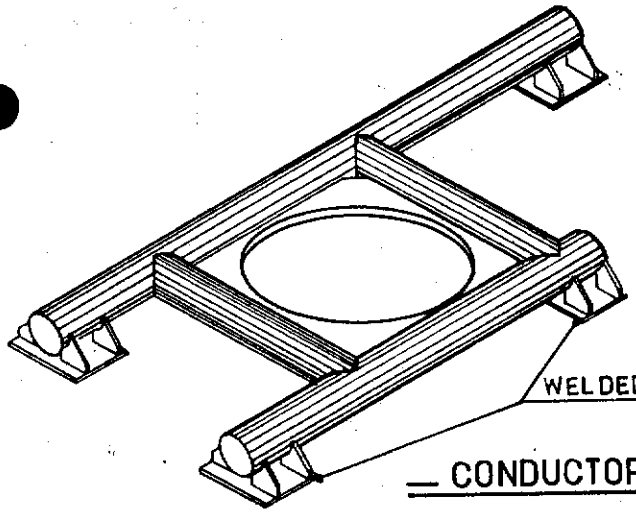

CONDUCTOR GUIDE N°2

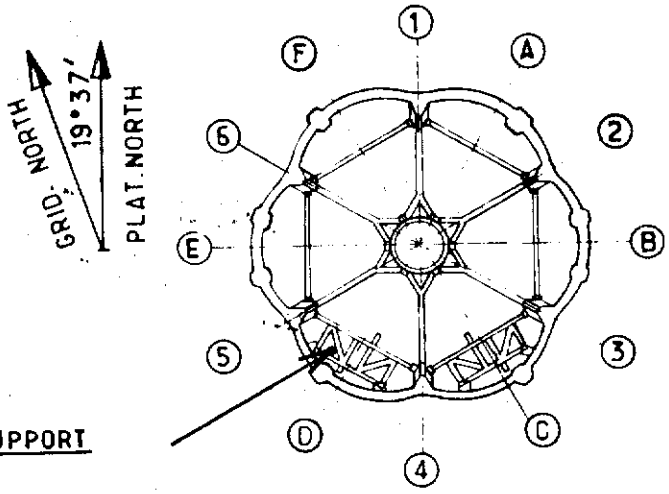

KEY PLAN

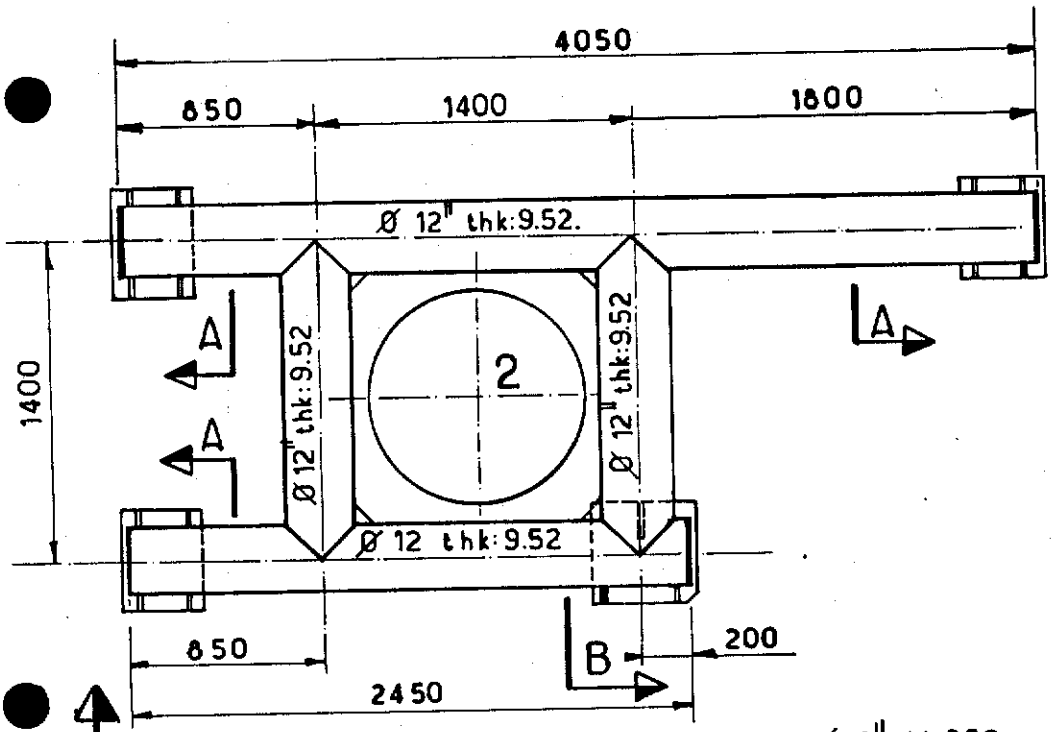

PLAN VIEW

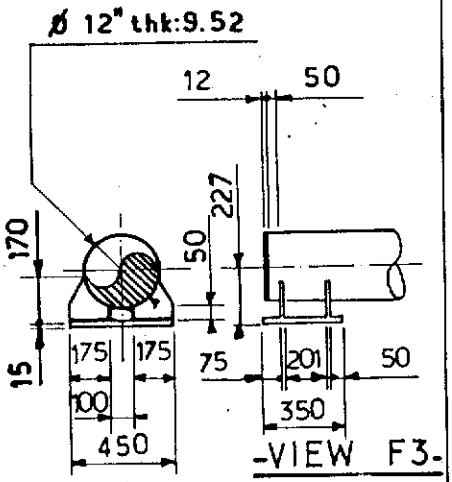

SECTION A

VIEW F3

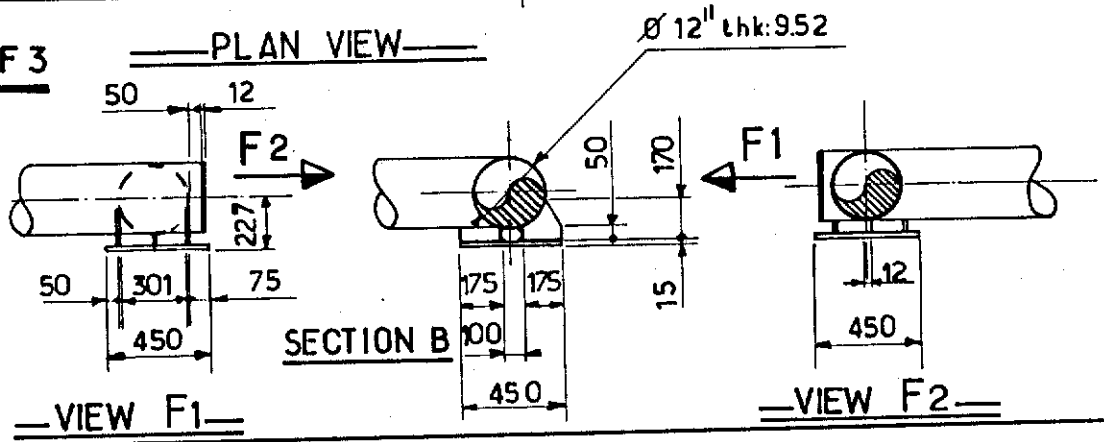

SECTION B

VIEW F1

VIEW F2

NOTES

FOR LOCATION SEE SK FF.91.36.35.1400.
FOR CONDUCTOR SLEEVE SEE SK FF.91.36.35.1491.

Rev.	Date	DESCRIPTION	by	app.
1	12.83	UP DATED	BVH	H.L.C

Contractor JVD 1029_40.73

elf aquitaine norge a/s
p.o.box 168
4001 Stavanger

elf
FRIGG FIELD

Job no.	Installation	System
	CDP 1	UNDERWATER
Scale 1:33	CONDUCTOR GUIDE N°2 CELL D SECONDARY FRAME LEVEL E	
Dwgr. no. FF 91_36_35_1403.	Rev 1	Sheet /

Form 100 318

CDP 1 AS BUILT DRAWINGS

REFERENCE DRAWING LIST FOR:

ORIGINATOR	CONSTRUCTION DRAWING REF.	TITLE	Rev	Sheet	Size
C. G. DORIS	41. MP. QF. 1084	SECONDARY FRAME FOR	1		A1
		RULING OF THE CONDUCTORS			
		SELEEVE ZONE D			

ELF DRAWING NUMBER	REVISION Index	REVISION Date	TITLE

Rev.	Date	DESCRIPTION	by	app.

Contractor

elf aquitaine norge a/s
p.o.box 168
4001 Stavanger

elf
FRIGG FIELD

Job no.	Installation	System
	CDP 1	UNDERWATER
Scale		
Dwgr. no. FF ___ ___ 1403	Rev	Sheet /

Form 100 318

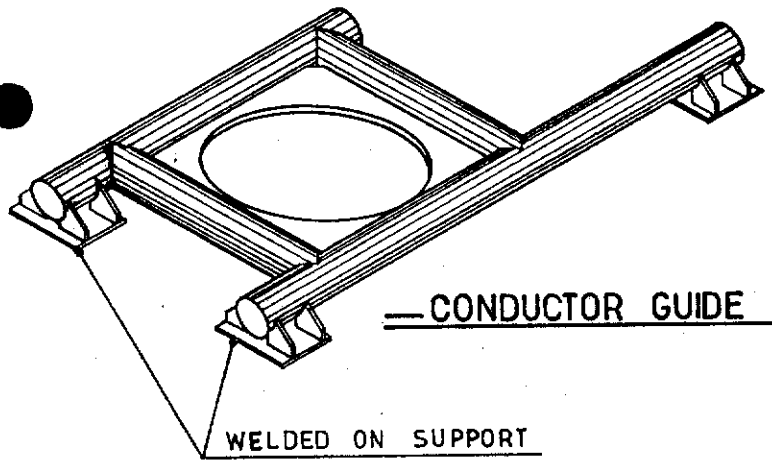

CONDUCTOR GUIDE N° 3

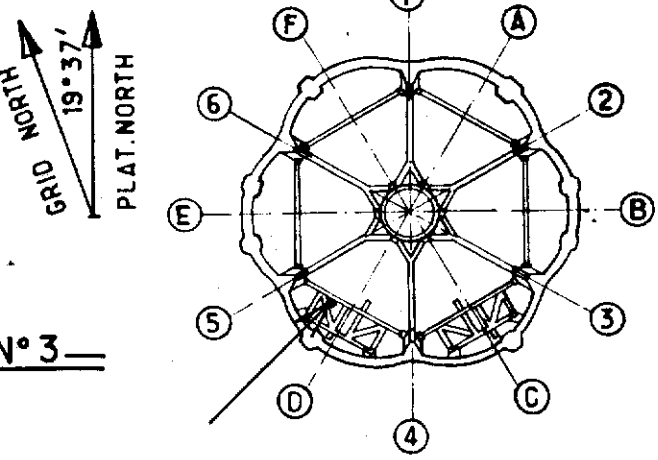

KEY PLAN

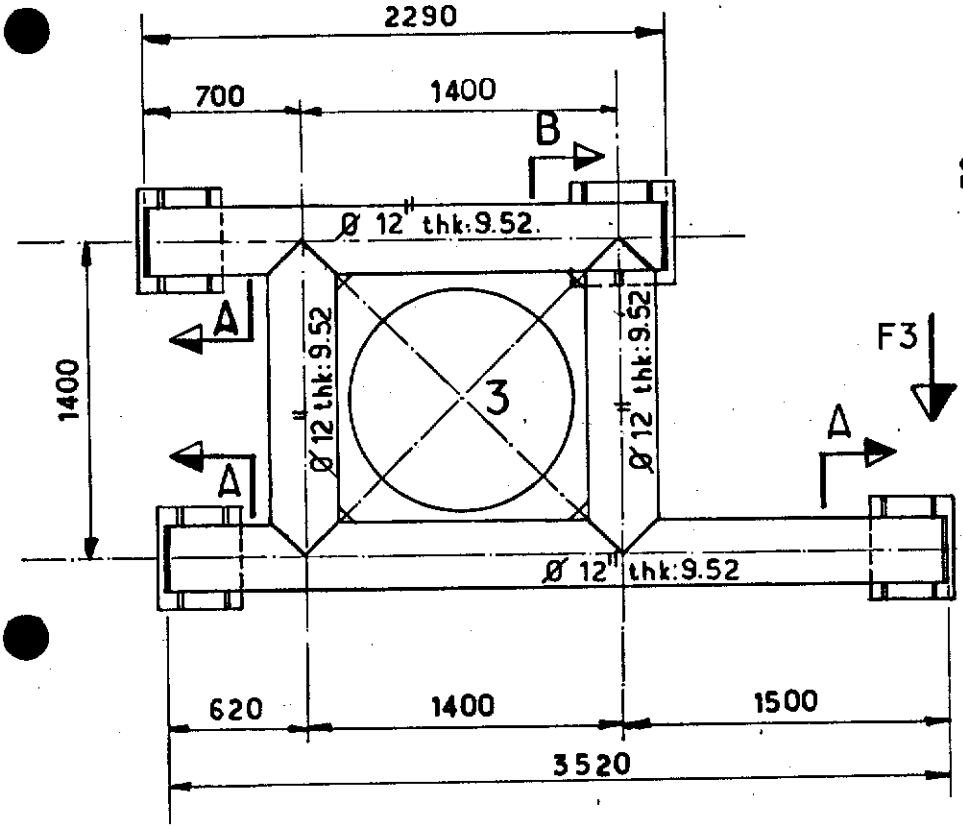

PLAN VIEW

SECTION A

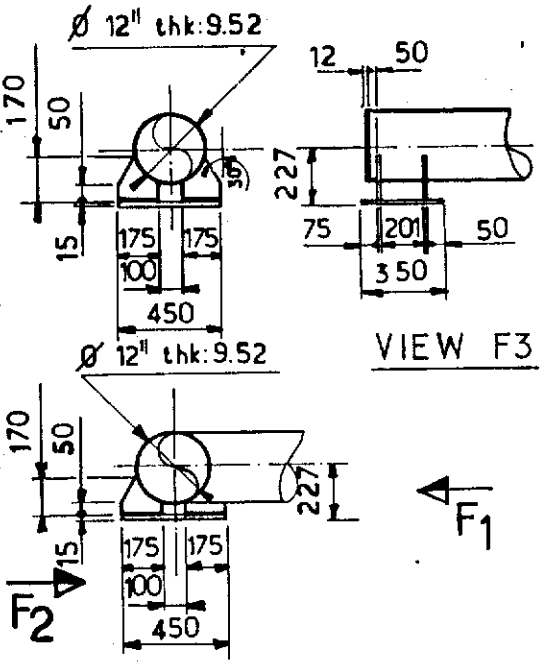

VIEW F3

SECTION B

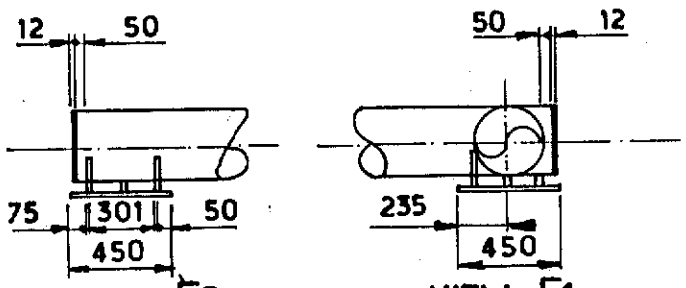

VIEW F2 VIEW F1

NOTES

FOR LOCATION SEE SK FF. 91.36.35.1400

FOR CONDUCTOR SLEEVE SEE SK FF.91.36.35.1491.

Rev.	Date	DESCRIPTION	by	app.
1	12.83	UP DATED	L.V.H	J.L.C

Contractor JVD 1029_40.74.

elf aquitaine norge a/s
p.o.box 168
4001 Stavanger

elf
FRIGG FIELD

Job no.	Installation	System
	CDP 1	UNDERWATER
Scale 1:33	CONDUCTOR GUIDE N°3 CELL D SECONDARY FRAME LEVEL E	
Dwgr. no. FF. 91.36.35.1404	Rev. 1	Sheet /

Form 100.318

CDP 1 AS BUILT DRAWINGS

REFERENCE DRAWING LIST FOR:

ORIGINATOR	CONSTRUCTION DRAWING REF.	TITLE	Rev	Sheet	Size
C.G. DORIS	A1.MP.QF.1083	SECONDARY FRAME FOR	1		A1
		RULING OF THE CONDUCTORS			
		SELEEVE ZONE D.			

ELF DRAWING NUMBER	REVISION Index	REVISION Date	TITLE

Rev.	Date	DESCRIPTION	by	app.

Contractor

elf aquitaine norge a/s
p.o.box 168
4001 Stavanger

elf
FRIGG FIELD

Job no.	Installation	System
	CDP 1	UNDERWATER
Scale		
Dwgr. no. FF ___ ___ 1404	Rev	Sheet /

CONDUCTOR GUIDE N°4

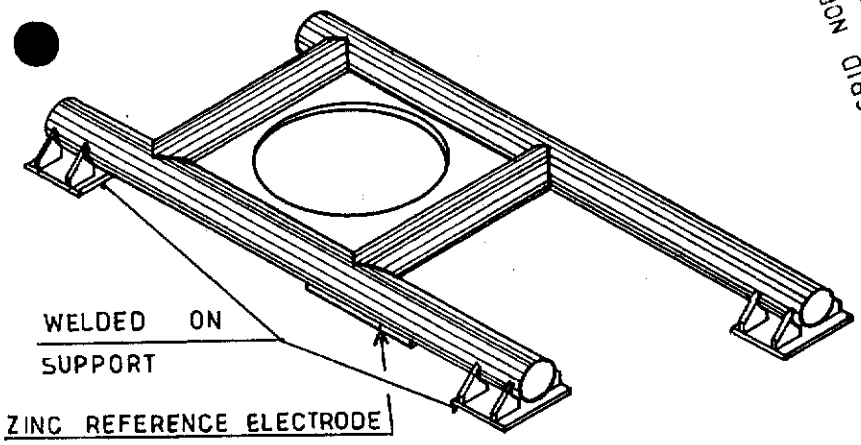

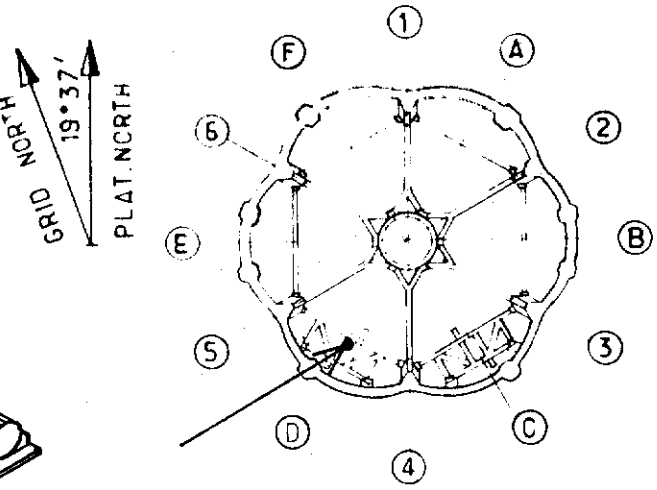

KEY PLAN

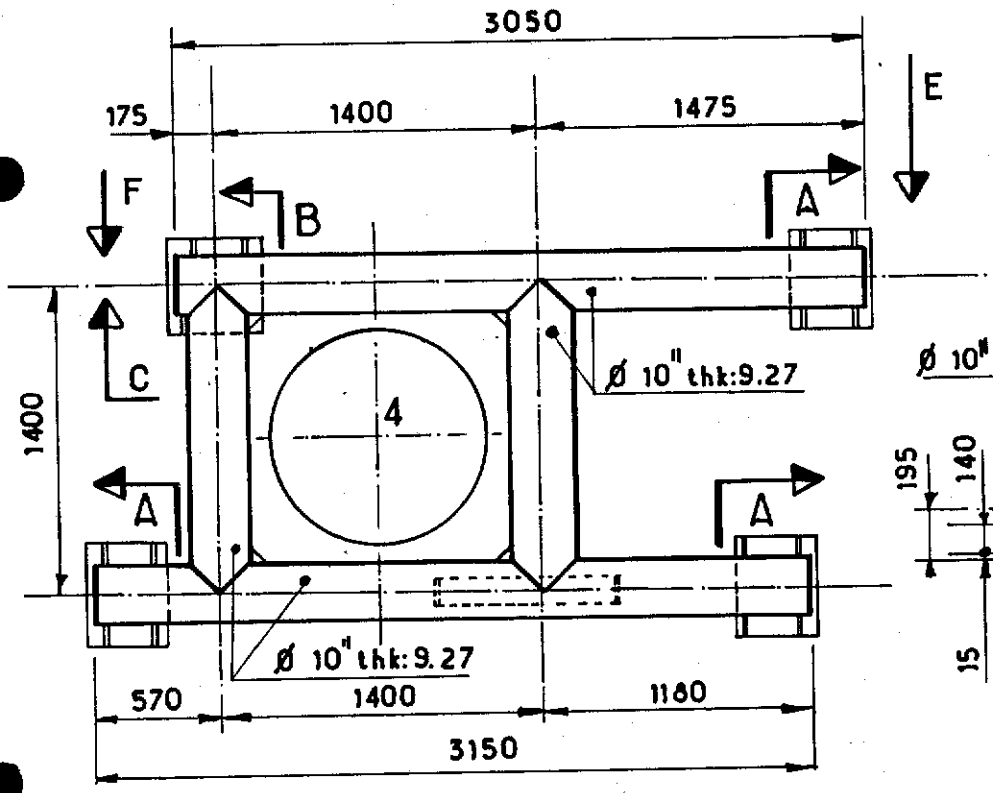

PLAN VIEW

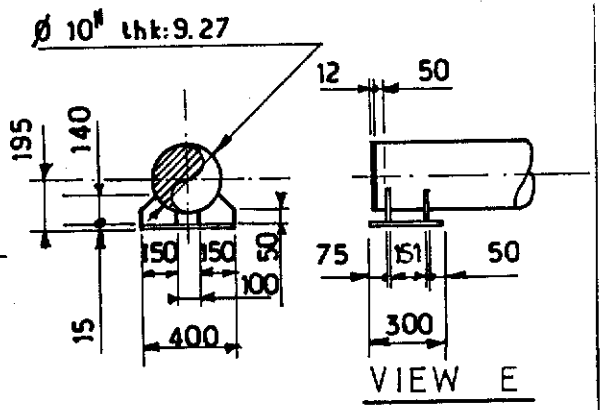

VIEW E

SECTION A

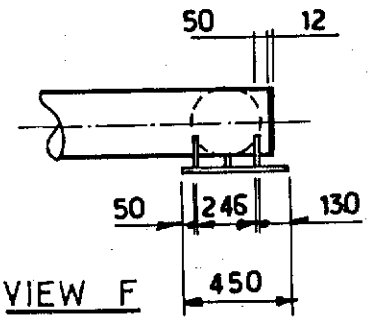

VIEW F

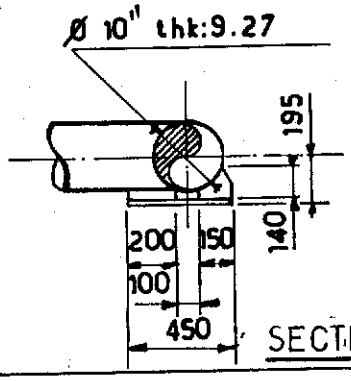

SECTION B

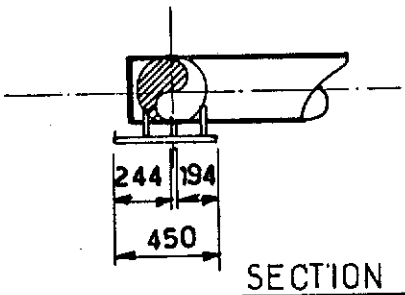

SECTION C

NOTES:

FOR LOCATION SEE SK FF.91.36.35.1400
FOR CONDUCTOR SLEEVE SEE SK FF.91.36.35.1491

FOR ZINC REFERENCE ELECTRODE SEE SK FF 91-36-35-1588

Rev.	Date	DESCRIPTION	by	app.
1	12.83	UP DATED	B.V.H	J.L.C

Contractor JVD 1029_40_75_

elf aquitaine norge a/s
p.o.box 168
4001 Stavanger

elf
FRIGG FIELD

Job no.	Installation	System
	CDP 1	UNDERWATER
Scale 1:33	CONDUCTOR GUIDE N°4 CELL D SECONDARY FRAME LEVEL E	
Dwgr. no FF. 91. 36. 35. 1405.	1	

CDP 1 AS BUILT DRAWINGS

REFERENCE DRAWING LIST FOR:

ORIGINATOR	CONSTRUCTION DRAWING REF.	TITLE	Rev	Sheet	Size
C.G. DORIS	A1. MP. QF. 1086	SECONDARY FRAME FOR	2		A1.
		RULING OF THE CONDUCTORS			
		SELEEVE ZONE D.			

ELF DRAWING NUMBER	REVISION Index	REVISION Date	TITLE

Rev.	Date	DESCRIPTION	by	app.

Contractor

elf aquitaine norge a/s
p.o.box 168
4001 Stavanger

elf
FRIGG FIELD

Job no.	Installation	System
	CDP 1	UNDERWATER
Scale		
Dwgr. no. FF 1405	Rev.	Sheet 1

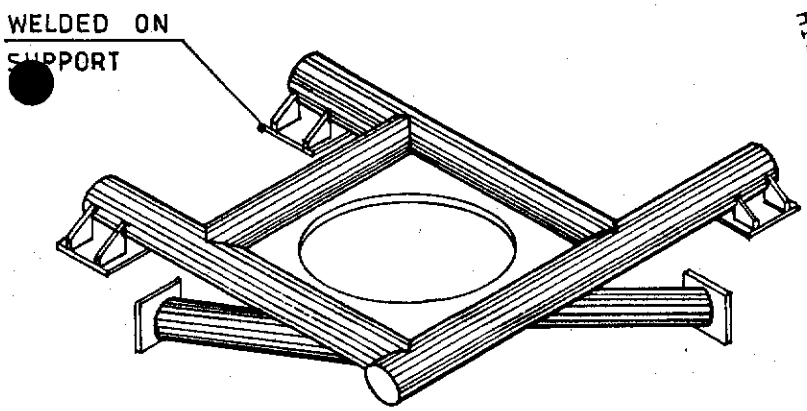

CONDUCTOR GUIDE N°5

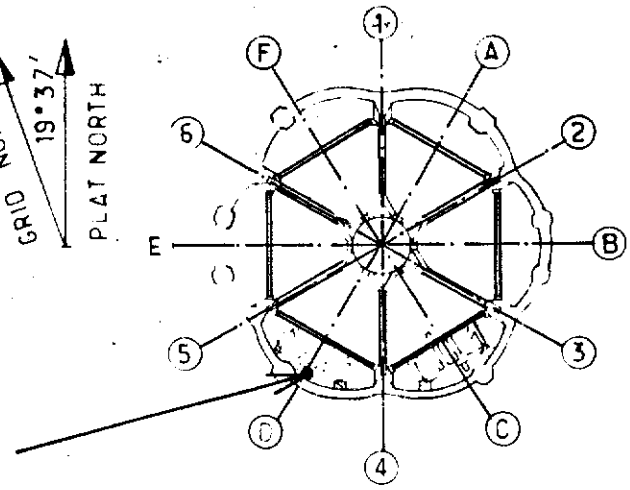

KEY PLAN

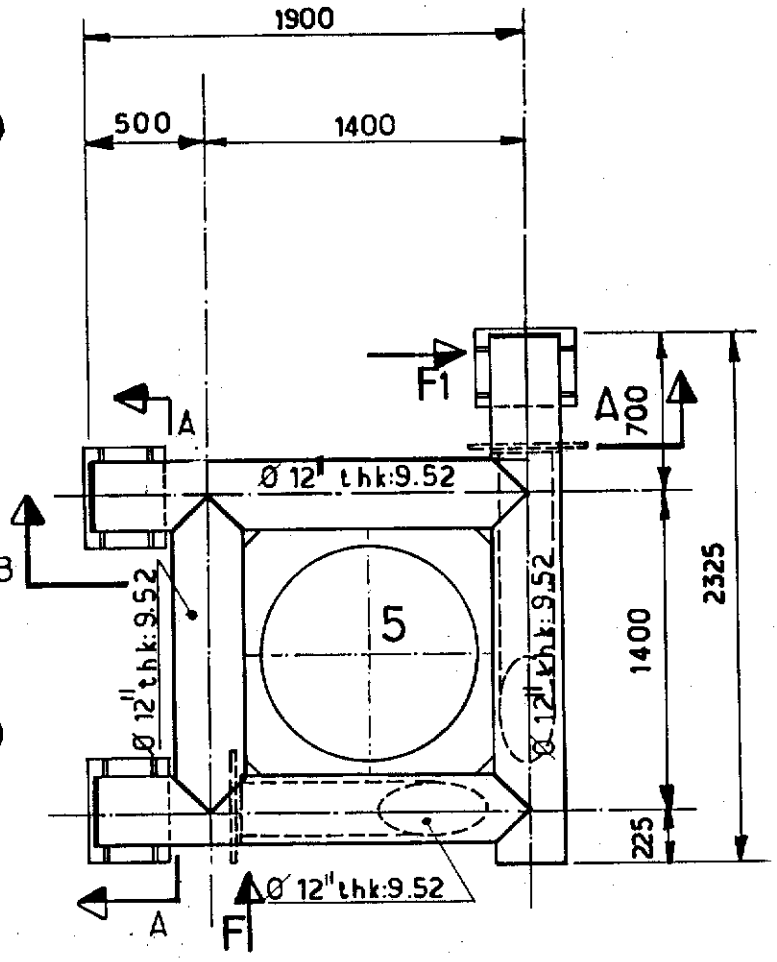

PLAN VIEW

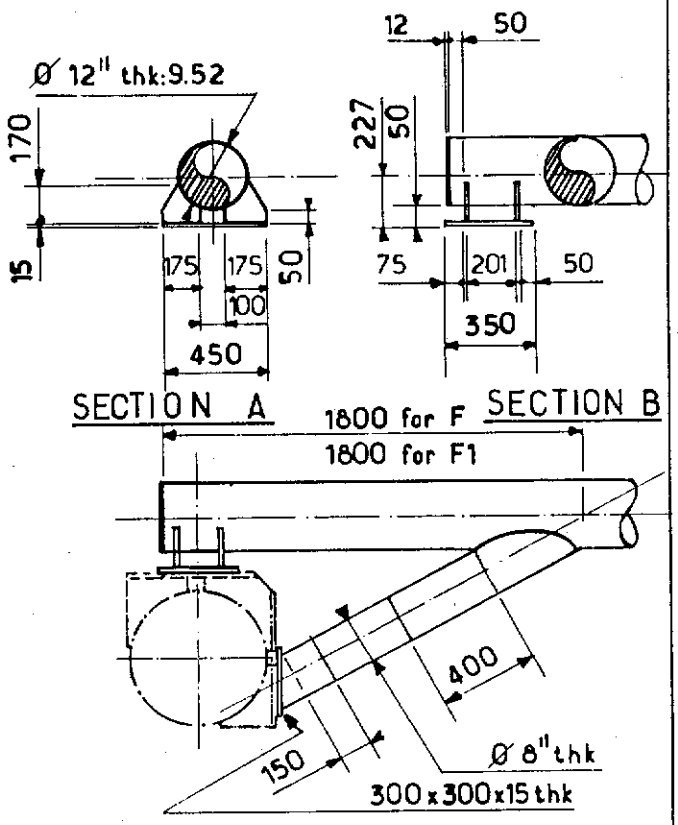

VIEW F AND F1

NOTES

FOR LOCATION SEE SK FF. 91.36.35.1400
FOR CONDUCTOR SLEEVE SEE SK FF. 91.36.35.1491

Rev.	Date	DESCRIPTION	by	app.
1	12.83	UP DATED	BVH	J.L.C

Contractor JVD 1029_40.76

elf aquitaine norge a/s
p.o.box 168
4001 Stavanger

elf
FRIGG FIELD

Job no.	Installation	System
	CDP 1	UNDERWATER
Scale 1:33	CONDUCTOR GUIDE N°5 CELL D SECONDARY FRAME LEVEL E	
Dwgr. no FF_91_36_35_1406	Rev. 1	Sheet

CDP 1 AS BUILT DRAWINGS

REFERENCE DRAWING LIST FOR:

ORIGINATOR	CONSTRUCTION DRAWING REF.	TITLE	Rev	Sheet	Size
C.G. DORIS	A1. MP. QF. 1088	SECONDARY FRAME FOR	1		A1
		RULING OF THE CONDUCTORS			
		SELEEVE ZONE D.			

ELF DRAWING NUMBER	REVISION Index	REVISION Date	TITLE

Rev.	Date	DESCRIPTION	by	app.

Contractor

elf aquitaine norge a/s
p.o.box 168
4001 Stavanger

elf

FRIGG FIELD

Job no.	Installation	System
	CDP 1	UNDERWATER
Scale		
Dwgr. no. FF 1406	Rev	Sheet /

Form 100 318

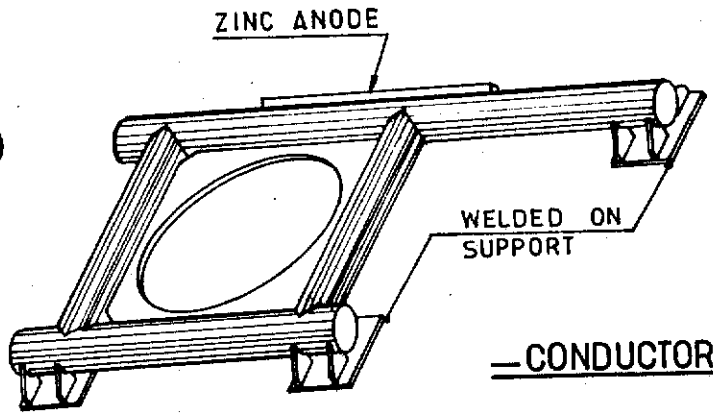

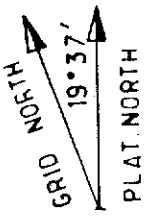

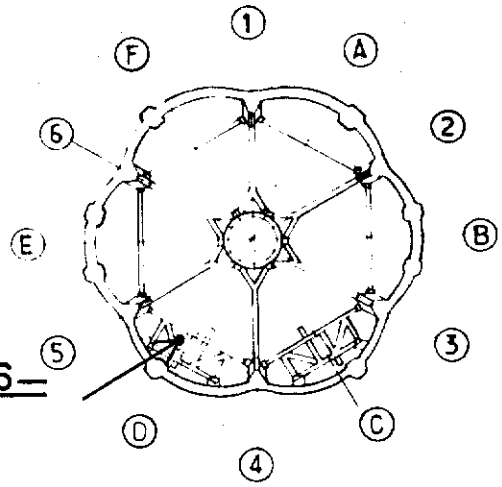

KEY PLAN

CONDUCTOR GUIDE N°6

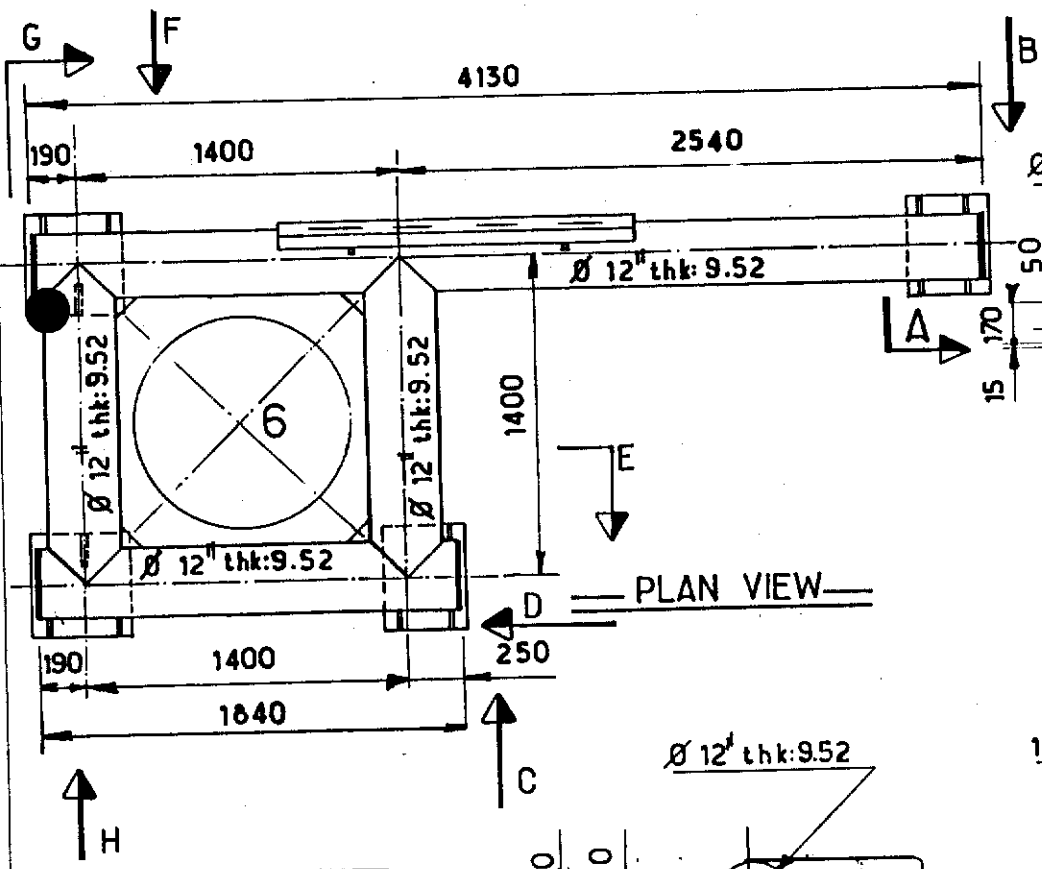

PLAN VIEW

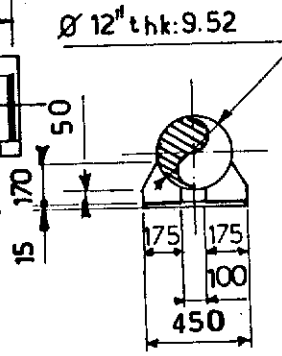

SECTION A

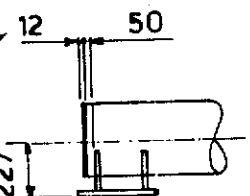

VIEW B

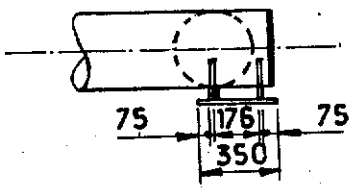

VIEW C

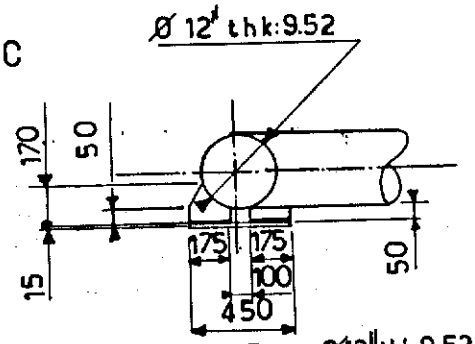

VIEW D

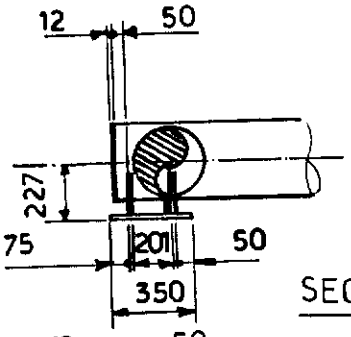

SECTION E

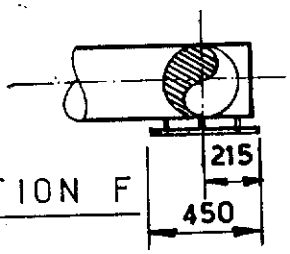

SECTION F

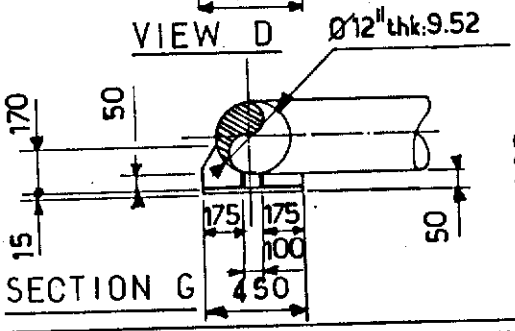

SECTION G

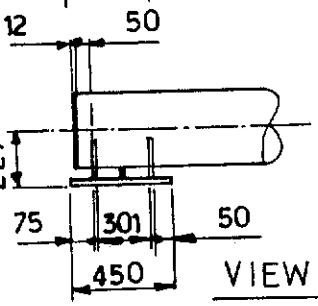

VIEW H

NOTES

FOR LOCATION SEE SK FF.91.36.35.1400
FOR CONDUCTOR SLEEVE SEE SK FF.91.36.35.1491
FOR ZINC ANODE SEE SK.FF 91-36-35-1587

Rev.	Date	DESCRIPTION	by	app.
1	12.83	UP DATED	BVH	JLC

Contractor JVD 1029_40_77_

elf aquitaine norge a/s
p.o.box 168
4001 Stavanger

elf
FRIGG FIELD

Job no.	Installation	System
	CDP 1	UNDERWATER
Scale 1:33	CONDUCTOR GUIDE N°6 CELL D SECONDARY FRAME LEVEL E	
Dwgr. no. FF 91_36_35_1407_	Rev. 1	Sheet /

CDP 1 AS BUILT DRAWINGS

EFERENCE DRAWING LIST FOR:

RIGINATOR	CONSTRUCTION DRAWING REF.	TITLE	Rev	Sheet	Size
G. DORIS	A1.MP. QF. 1085	SECONDARY FRAME FOR	1		A1
		RULING OF THE CONDUCTORS			
		SELEEVE ZONE D.			

LF DRAWING NUMBER	REVISION Index	REVISION Date	TITLE

ate	DESCRIPTION	by	app.
ctor			

elf aquitaine norge a/s
p.o.box 168
4001 Stavanger

elf
FRIGG FIELD

Job no.	Installation	System
	CDP 1	UNDERWATER
Scale		
Dwgr. no. FF 1407	Rev.	Sheet /

Form 100 318

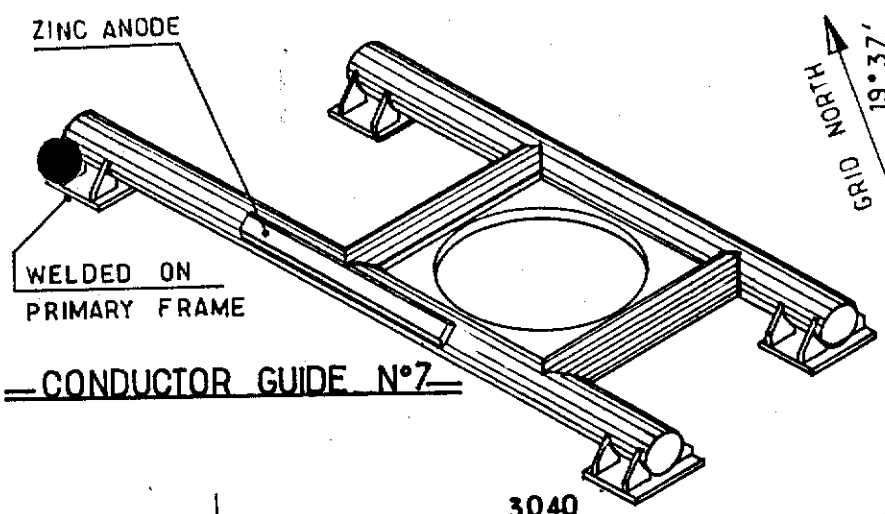

—CONDUCTOR GUIDE N°7—

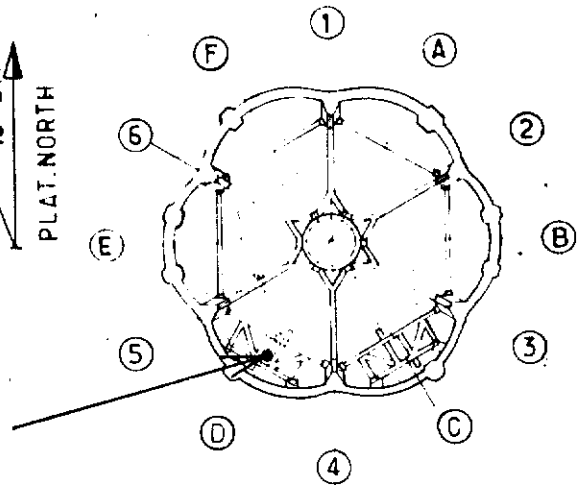

KEY PLAN

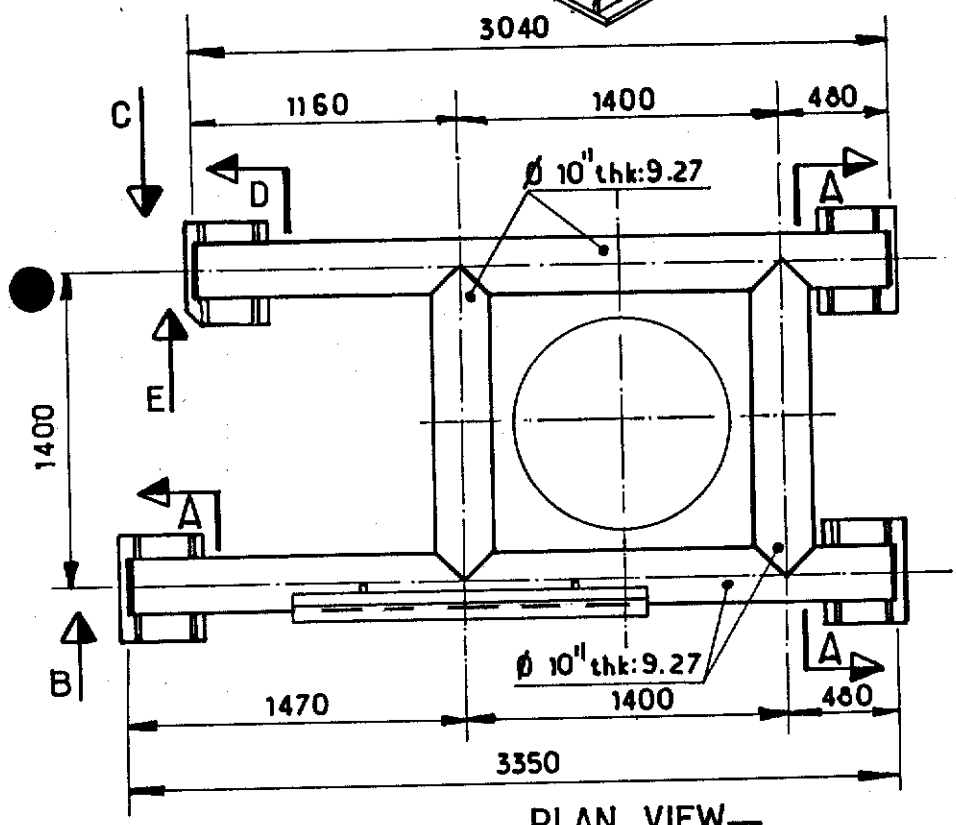

—PLAN VIEW—

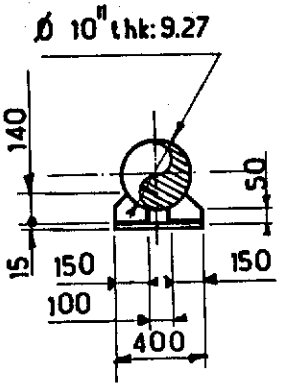

SECTION A

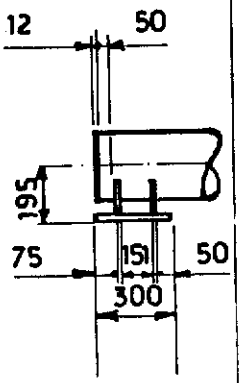

VIEW B

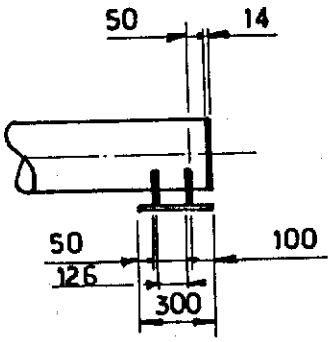

VIEW C

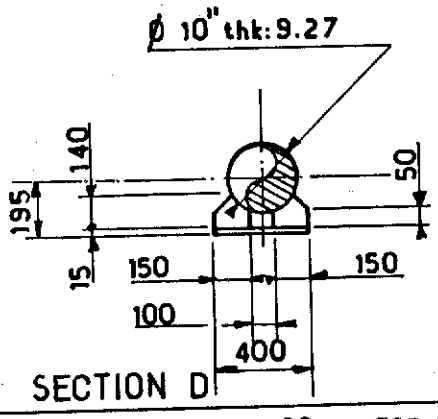

SECTION D

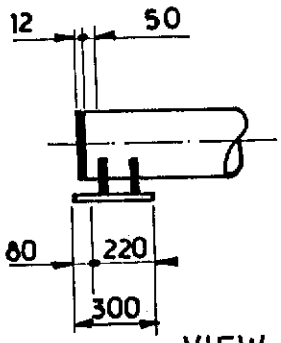

VIEW E

NOTES FOR LOCATION SEE SK FF-91-36-35-1400 FOR ZINC ANODE SEE SK. FF 91-36-35-1587
FOR CONDUCTOR SLEEVE SEE SK FF-91-36-35-1491

Rev.	Date	DESCRIPTION	by	app.
1	12.83	UP DATED	BVH	JLC

Contractor JVD 1029_40.78

elf aquitaine norge a/s
p.o.box 168
4001 Stavanger

elf
FRIGG FIELD

Job no.	Installation CDP 1	System UNDERWATER
Scale 1:33	CONDUCTOR GUIDE N°7 CELL D SECONDARY FRAME LEVEL E	
Dwgr. no FF_91_36_35_1408	1	

CDP 1 AS BUILT DRAWINGS

REFERENCE DRAWING LIST FOR:

ORIGINATOR	CONSTRUCTION DRAWING REF.	TITLE	Rev	Sheet	Size
C.G. DORIS	A1. HP. QF 1087	SECONDARY FRAME FOR	2		A1
		RULING OF THE CONDUCTORS			
		SELEEVE ZONE D.			

ELF DRAWING NUMBER	REVISION Index	REVISION Date	TITLE

Rev.	Date	DESCRIPTION	by	app.

Contractor

elf aquitaine norge a/s
p.o.box 168
4001 Stavanger

elf
FRIGG FIELD

Job no.	Installation	System
	CDP 1	UNDERWATER
Scale		
Dwgr. no. FF 1408	Rev	Sheet /

Form 100 318

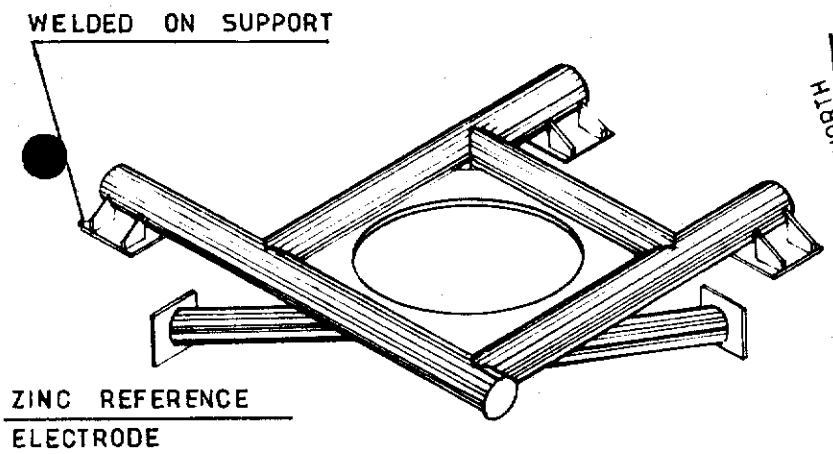

CONDUCTOR GUIDE N°8

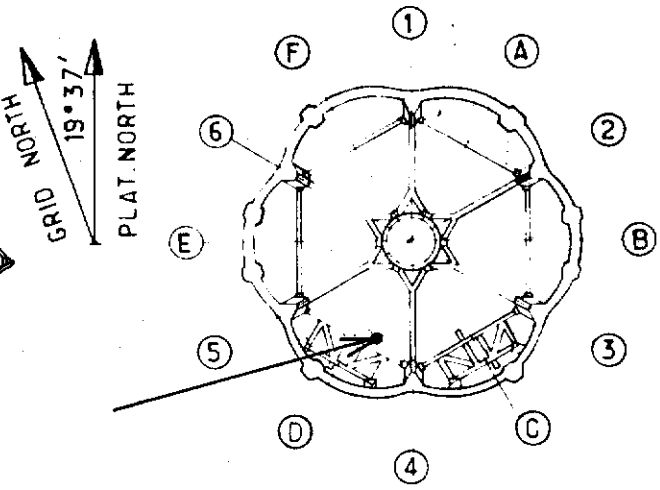

KEY PLAN

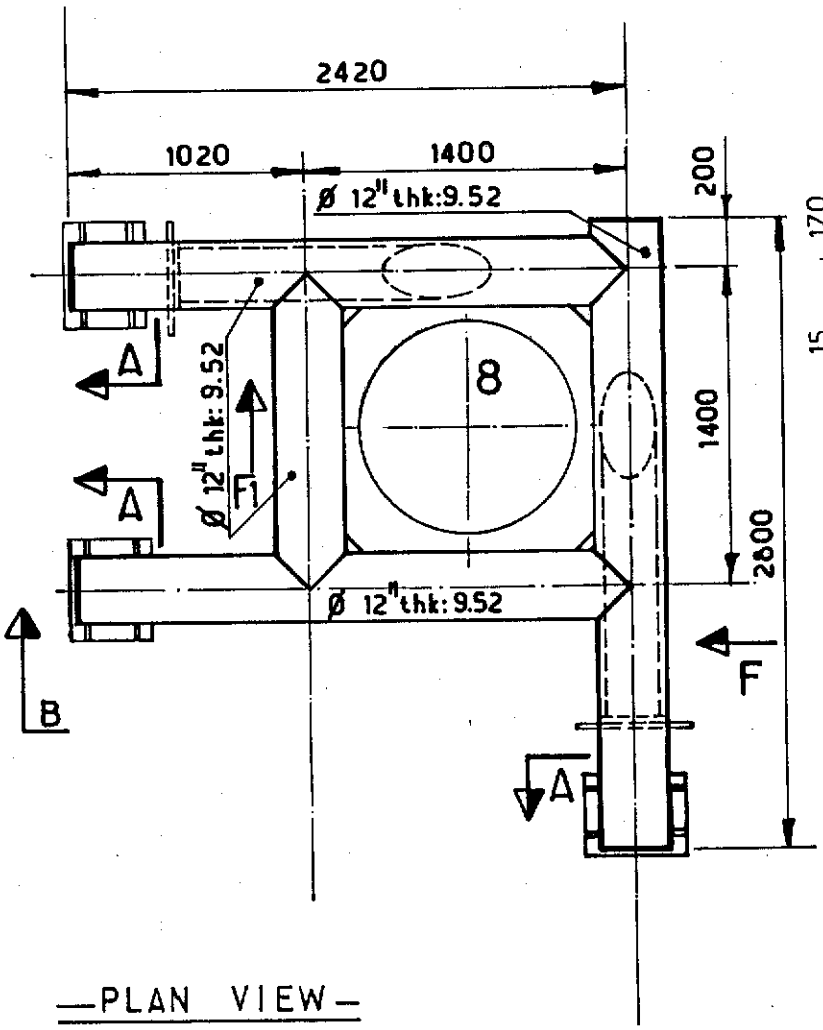

PLAN VIEW

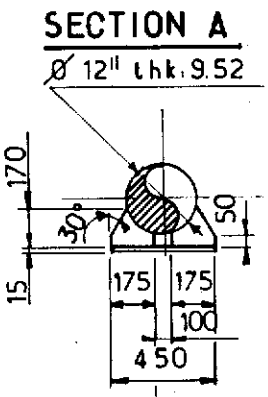

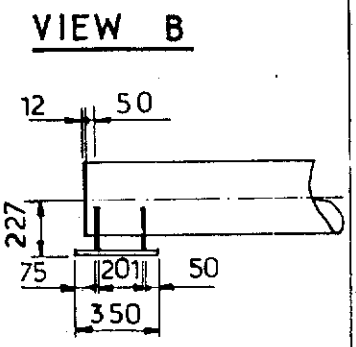

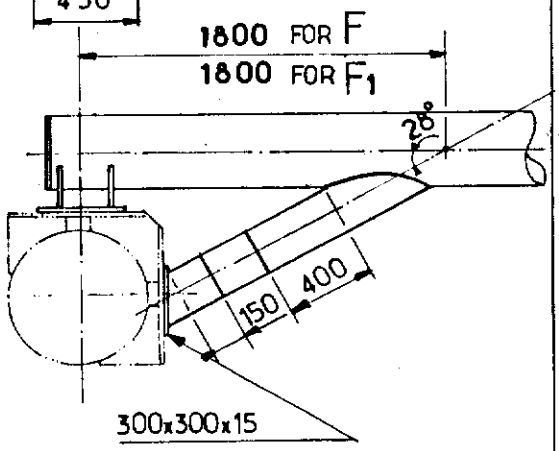

VIEW F AND F1

NOTES

FOR LOCATION SEE SK. FF.91.36.35.1400.
FOR CONDUCTOR SLEEVE SEE SK. FF.91.36.35.1491.

Rev.	Date	DESCRIPTION	by	app.
1	12.83	UP DATED	BVH	JLC

Contractor JVD 1029_40. 79

elf aquitaine norge a/s
p.o.box 168
4001 Stavanger

elf
FRIGG FIELD

Job no.	Installation	System
	CDP 1	UNDERWATER

Scale 1:33

CONDUCTOR GUIDE N°8 CELL D
SECONDARY FRAME LEVEL E

Dwgr. no FF.91.36.35.1409

No. 1

Sheet

CDP 1 AS BUILT DRAWINGS

REFERENCE DRAWING LIST FOR:

ORIGINATOR	CONSTRUCTION DRAWING REF.	TITLE	Rev	Sheet	Size
C.G. DORIS	A1. MP. QF. 1089	SECONDARY FRAME FOR	1		A1.
		RULING OF THE CONDUCTORS			
		SELEEVE ZONE D.			

ELF DRAWING NUMBER	REVISION Index	REVISION Date	TITLE

Rev.	Date	DESCRIPTION	by	app.

Contractor

elf aquitaine norge a/s
p.o.box 168
4001 Stavanger

elf

FRIGG FIELD

Job no.	Installation	System
	CDP 1	UNDERWATER
Scale		
Dwgr. no. FF ___ ___ 1409	Rev	Sheet /

Form 110.31H

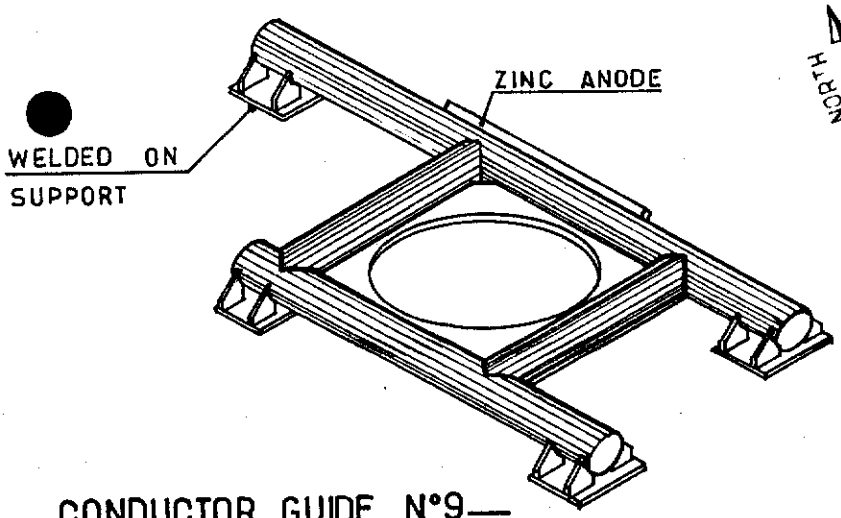

CONDUCTOR GUIDE N°9

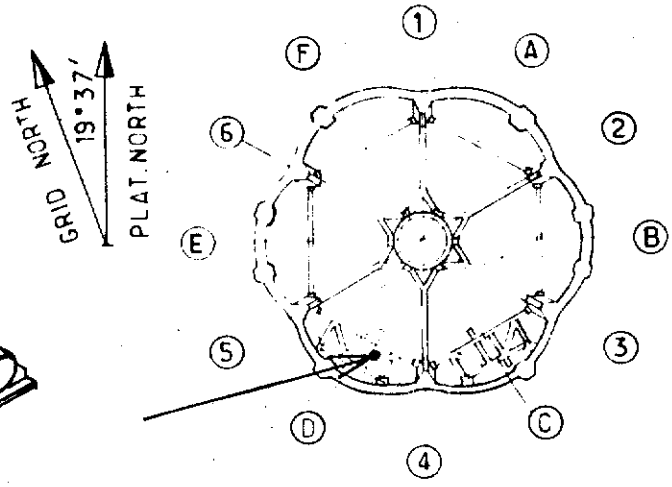

KEY PLAN

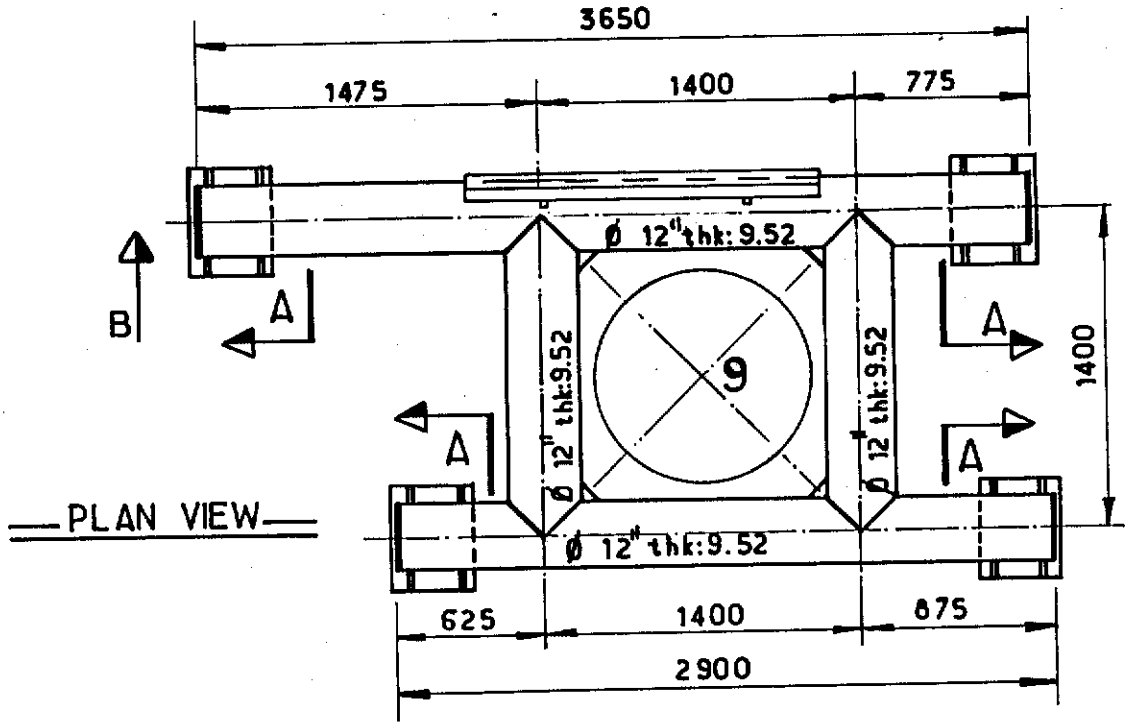

PLAN VIEW

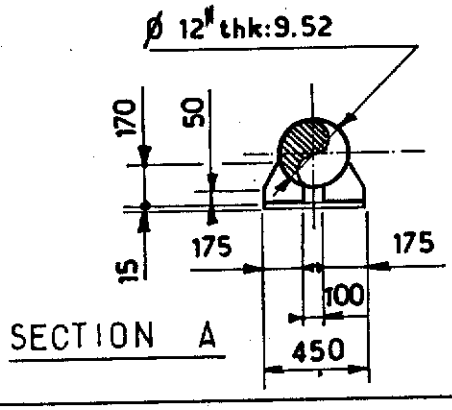

SECTION A

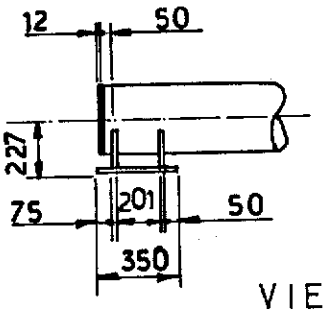

VIEW B

NOTES
FOR LOCATION SEE SK FF.91.36.35.1400.
FOR CONDUCTOR SLEEVE SEE SK FF.91.36.35.1491.

FOR ZINC ANODE SEE SK.FF 91-36-35-1587

Rev.	Date	DESCRIPTION	by	app.
1	12.83	UP DATED	BVH	J.LC

Contractor JVD 1029_40_80_

elf aquitaine norge a/s
p.o.box 168
4001 Stavanger

elf
FRIGG FIELD

Job no.	Installation	System
	CDP 1	UNDERWATER
Scale 1:33	CONDUCTOR GUIDE N°9 CELL D SECONDARY FRAME LEVEL E	
Dwgr. no FF 91 36_35_1410_		1

CDP 1 AS BUILT DRAWINGS

REFERENCE DRAWING LIST FOR:

ORIGINATOR	CONSTRUCTION DRAWING REF.	TITLE	Rev	Sheet	Size
C. G. DORIS	AI. MP. QF. 1090	SECONDARY FRAME FOR	1		A1.
		RULING OF THE CONDUCTORS			
		SELEEVE ZONE D.			

ELF DRAWING NUMBER	REVISION Index	REVISION Date	TITLE

Rev.	Date	DESCRIPTION	by	app.

Contractor

elf aquitaine norge a/s
p.o.box 168
4001 Stavanger

elf

FRIGG FIELD

Job no.	Installation	System
	CDP 1	UNDERWATER
Scale		
Dwgr. no. FF ___ ___ 1410	Rev	Sheet /

Form 100 318

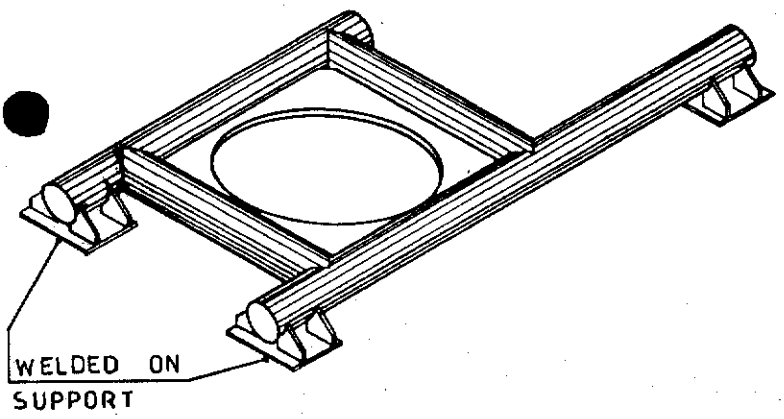

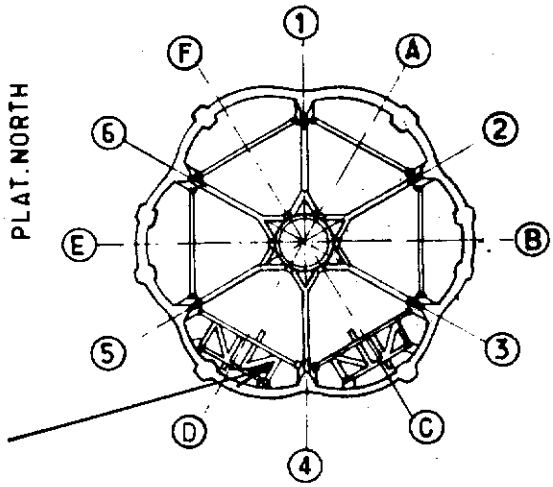

CONDUCTOR GUIDE N°10

KEY PLAN

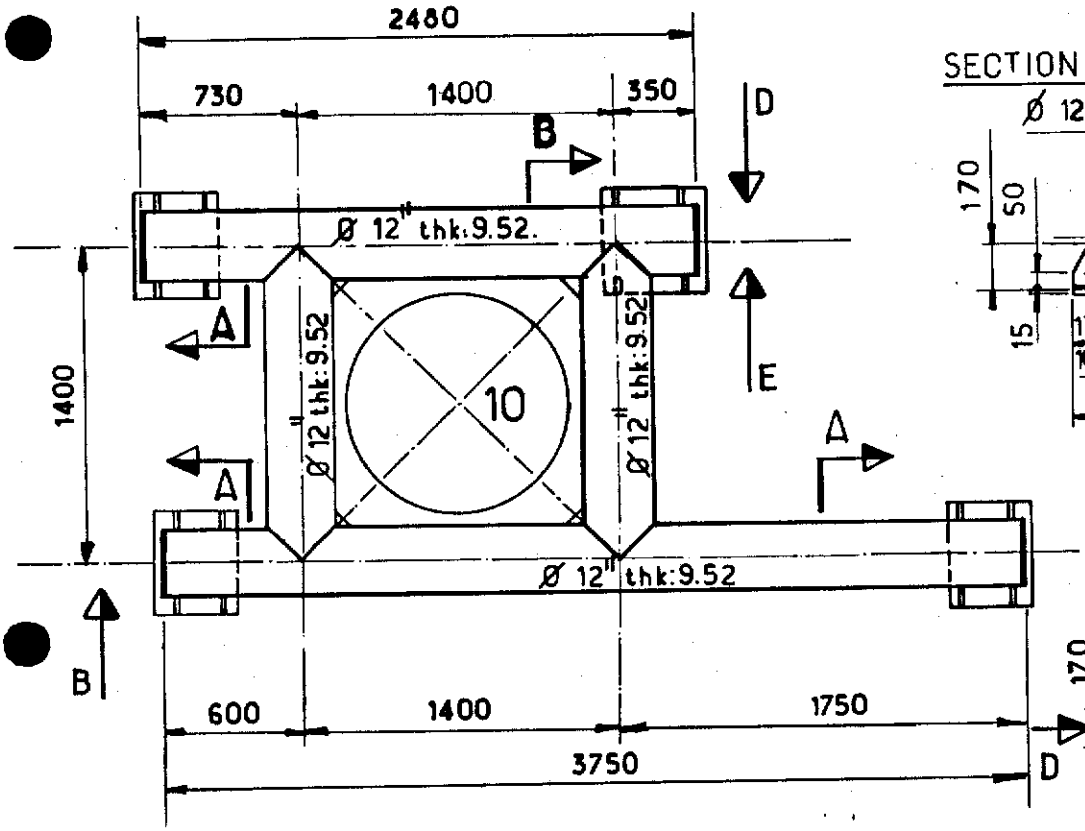

PLAN VIEW

SECTION A

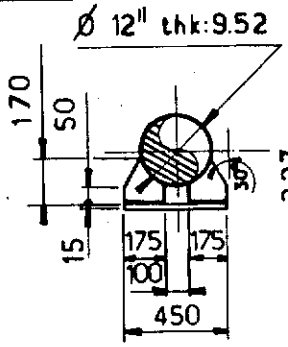

VIEW B

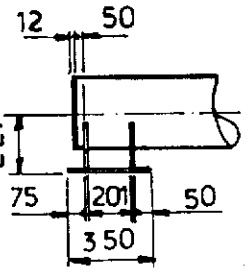

SECTION C

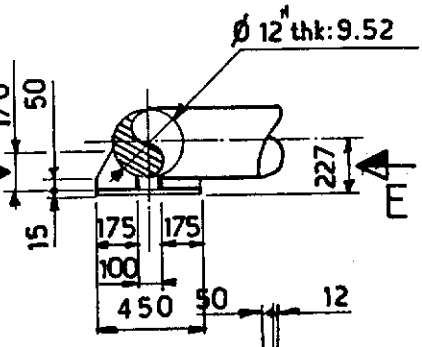

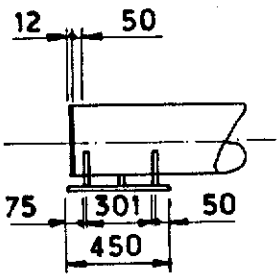

VIEW D

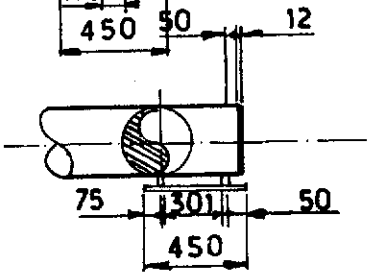

SECTION E

NOTES

FOR LOCATION SEE SK FF.91.36.35.1400.
FOR CONDUCTOR SLEEVE SEE SK FF.91.36.35.1491.

Rev.	Date	DESCRIPTION	by	app.
1	12.83	UP DATED	BVH	JLC

Contractor JVD 1029-40-81-

elf aquitaine norge a/s
p.o.box 168
4001 Stavanger

elf
FRIGG FIELD

Job no.	Installation CDP 1	System UNDERWATER
Scale 1:33	CONDUCTOR GUIDE N° 10 CELL D SECONDARY FRAME LEVEL E	
Dwgr. no. FF.91.36.35.1411.	Rev. 1	Sheet /

Form 100.318

CDP 1 AS BUILT DRAWINGS

REFERENCE DRAWING LIST FOR:

ORIGINATOR	CONSTRUCTION DRAWING REF.	TITLE	Rev	Sheet	Size
C.G. DORIS	A1. MP. QF. 1092	SECONDARY FRAME FOR	1		A1.
		RULING OF THE CONDUCTOR			
		SELEEVE ZONE D.			

ELF DRAWING NUMBER	REVISION Index	REVISION Date	TITLE

Rev.	Date	DESCRIPTION	by	app.

Contractor

elf aquitaine norge a/s
p.o.box 168
4001 Stavanger

elf
FRIGG FIELD

Job no.	Installation	System
	CDP 1	UNDERWATER
Scale		
Dwgr. no. FF ___ ___ 1411	Rev	Sheet /

Form 1(h) 318

—CONDUCTOR GUIDE N°11—

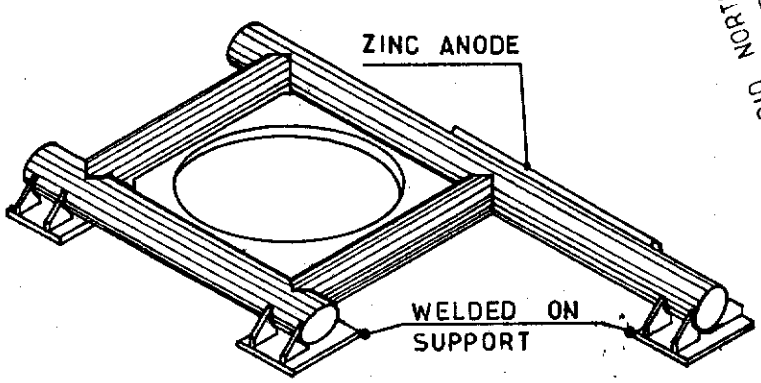

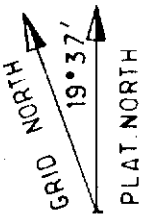

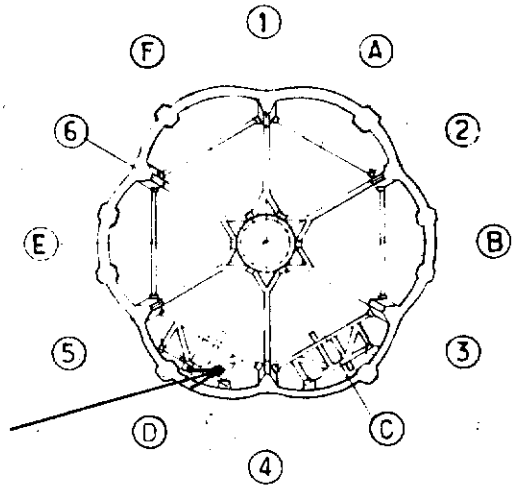

KEY PLAN

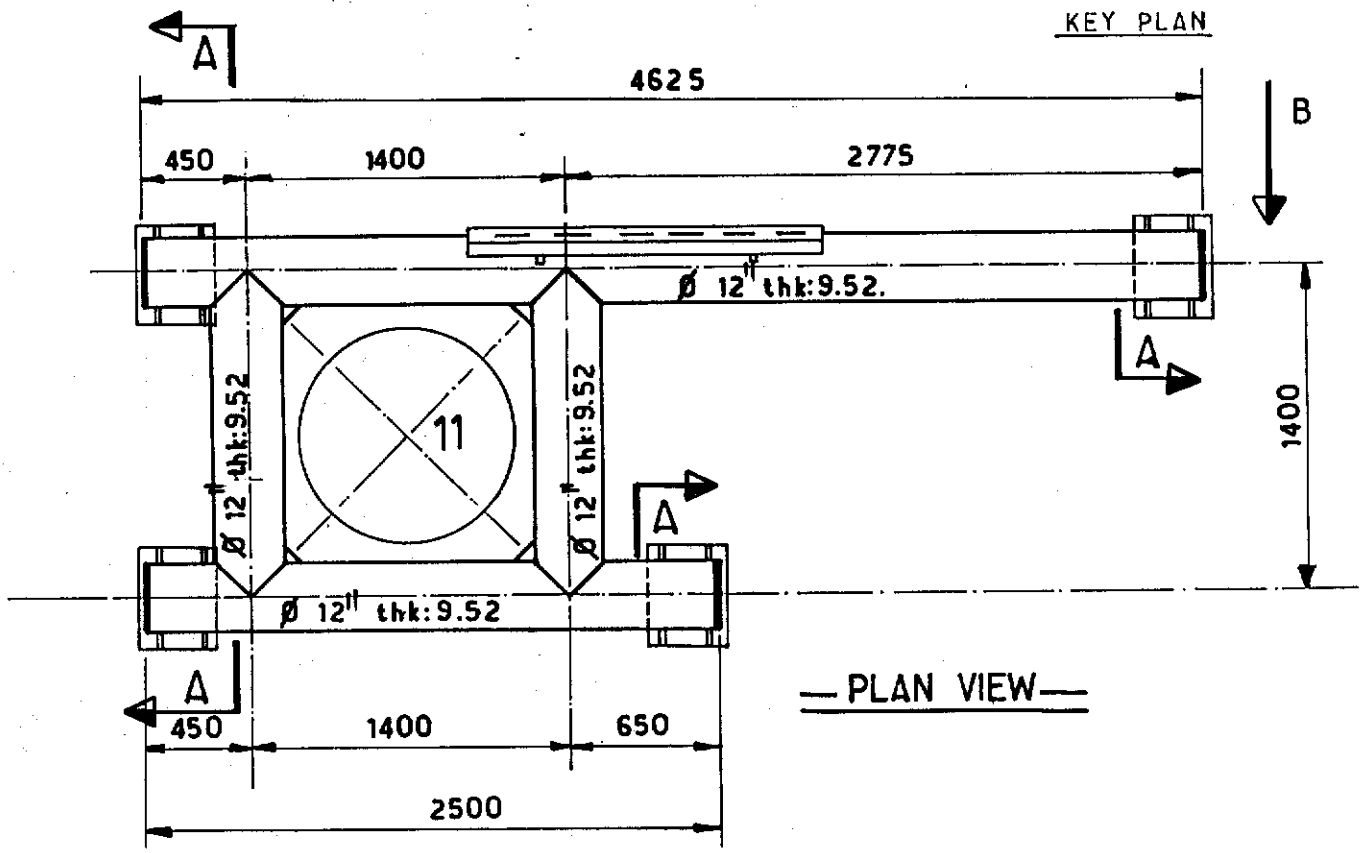

—PLAN VIEW—

SECTION A

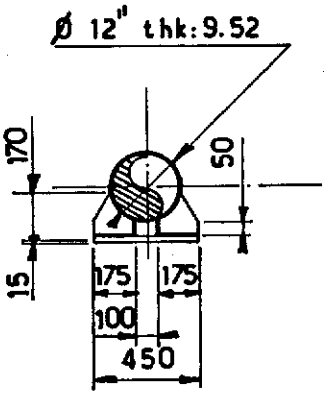

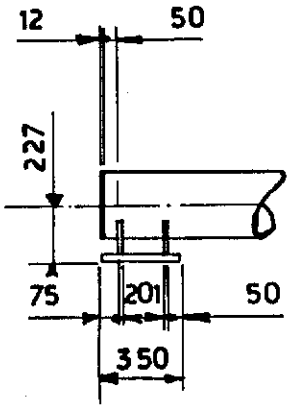

VIEW B

NOTES

FOR LOCATION SEE SK FF-91.36.35.1400

FOR CONDUCTOR SLEEVE SEE SK FF-91-36-35-1491.

FOR ZINC ANODE SEE SK.FF 91.36.35.1587

Rev.	Date	DESCRIPTION	by	app.
1	12,83	UP DATED	B.VH	J.C

Contractor JVD 1029_40_82_

elf aquitaine norge a/s
p.o.box 168
4001 Stavanger

elf
FRIGG FIELD

Job no.	Installation	System
	CDP 1	UNDERWATER
Scale 1:33	CONDUCTOR GUIDE N°11 CELL D SECONDARY FRAME LEVEL E	
Dwgr. no FF 91 36 35 1412		1

CDP 1 AS BUILT DRAWINGS

REFERENCE DRAWING LIST FOR:

ORIGINATOR	CONSTRUCTION DRAWING REF.	TITLE	Rev	Sheet	Size
C.G. DORIS	A1. MP. QF. 1093	SECONDARY FRAME FOR	1		A1.
		RULING OF THE CONDUCTORS			
		SELEEVE ZONE D.			

ELF DRAWING NUMBER	REVISION Index	REVISION Date	TITLE

Rev.	Date	DESCRIPTION	by	app.

Contractor

elf aquitaine norge a/s
p.o.box 168
4001 Stavanger

elf
FRIGG FIELD

Job no.	Installation	System
	CDP 1	UNDERWATER
Scale		
Dwgr. no. FF 1412	Rev.	Sheet 1

Form 1/h 118

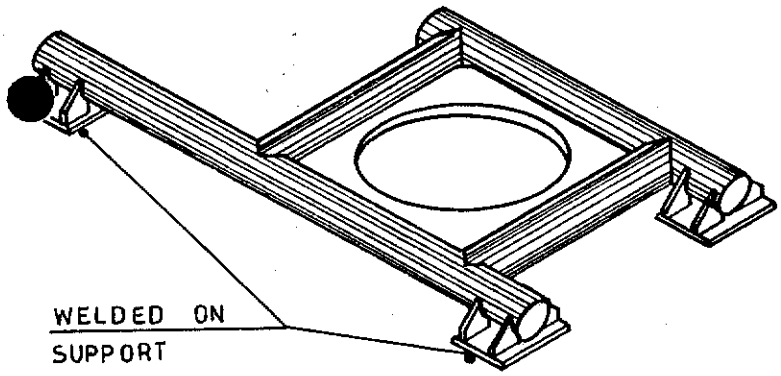

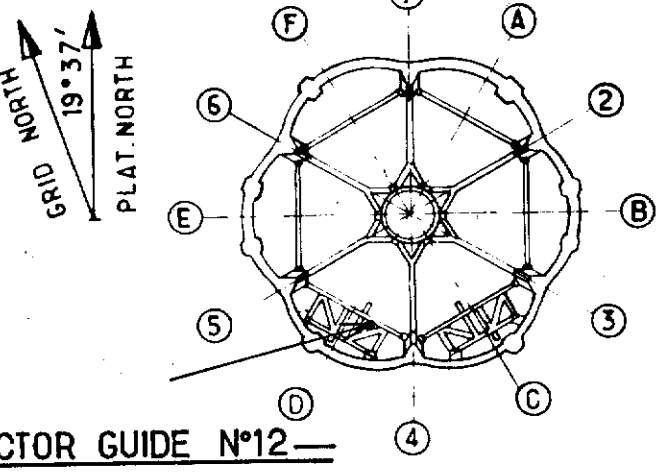

CONDUCTOR GUIDE N°12

KEY PLAN

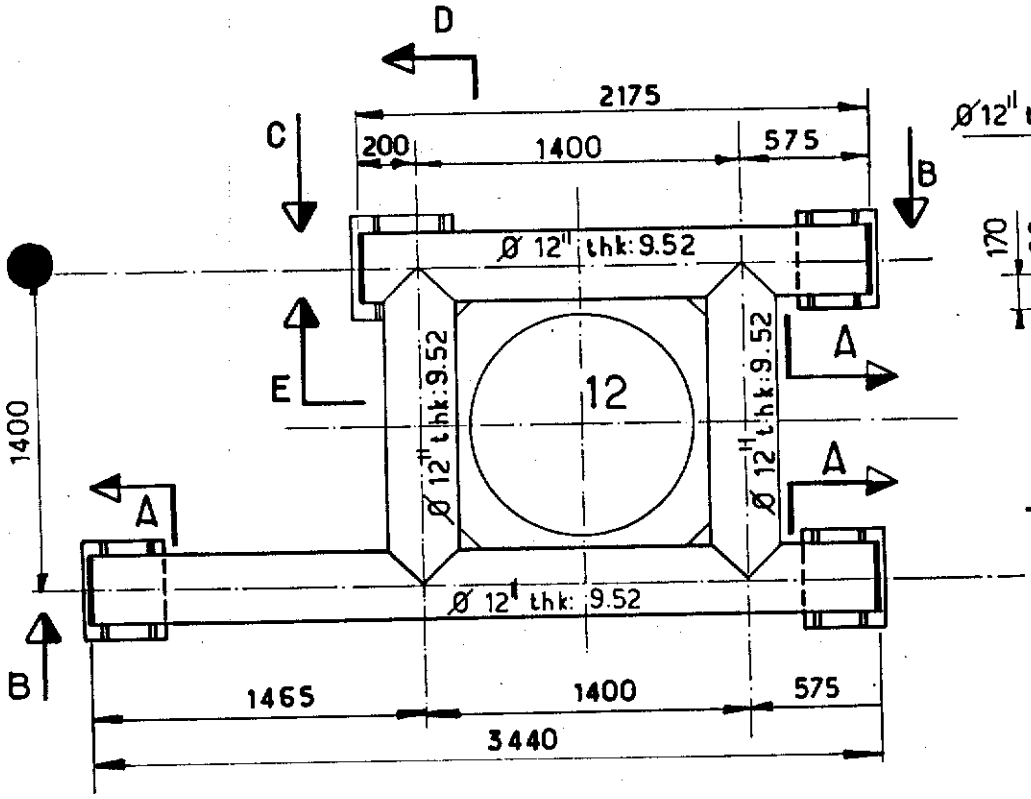

PLAN VIEW

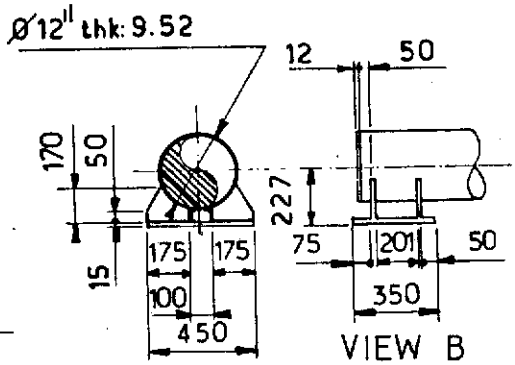

SECTION A

VIEW B

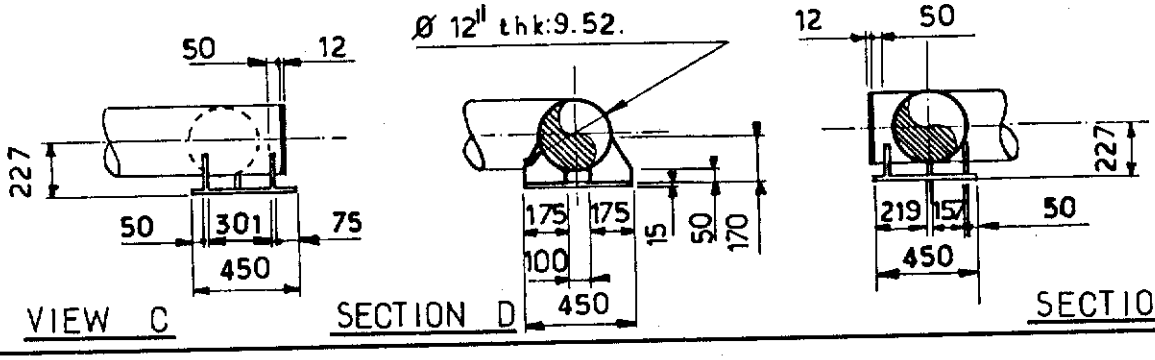

VIEW C

SECTION D

SECTION E

NOTES

FOR LOCATION SEE SK FF-91-36-35-1400

FOR CONDUCTOR SLEEVE SEE SK FF-91-36-35-1491.

Rev.	Date	DESCRIPTION	by	app.
1	1283	UP DATED	BVH	JLC

Contractor JVD 1029-40-83-

elf aquitaine norge a/s
p.o.box 168
4001 Stavanger

elf
FRIGG FIELD

Job no.	Installation CDP 1	System UNDERWATER
Scale 1:33	CONDUCTOR GUIDE N°12 CELL D SECONDARY FRAME LEVEL E	
Dwgr. no. FF 91-36-35-1413	Rev 1	Sheet

Form 100 318

CDP 1 AS BUILT DRAWINGS

REFERENCE DRAWING LIST FOR:

ORIGINATOR	CONSTRUCTION DRAWING REF.	TITLE	Rev	Sheet	Size
C.G. DORIS	A1. MP. QF.1091	SECONDARY FRAME FOR	1		A1.
		RULING OF THE CONDUCTORS			
		SELEEVE ZONE D.			

ELF DRAWING NUMBER	REVISION Index	REVISION Date	TITLE

Rev.	Date	DESCRIPTION	by	app.

Contractor

elf aquitaine norge a/s
p.o.box 168
4001 Stavanger

elf

FRIGG FIELD

Job no.	Installation	System
	CDP 1	UNDERWATER
Scale		
Dwgr. no. FF ___ ___ 1413	Rev	Sheet /

Form 100 318

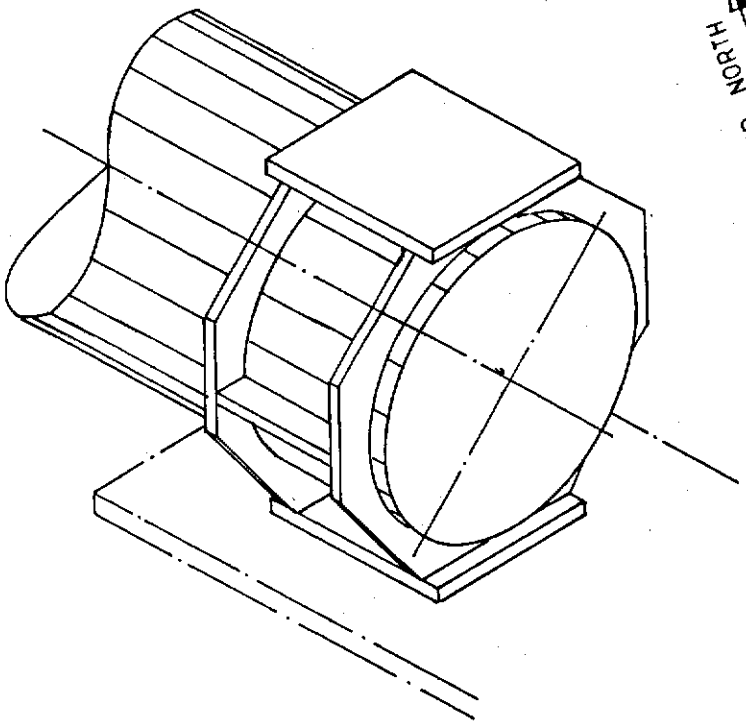

VIEW F

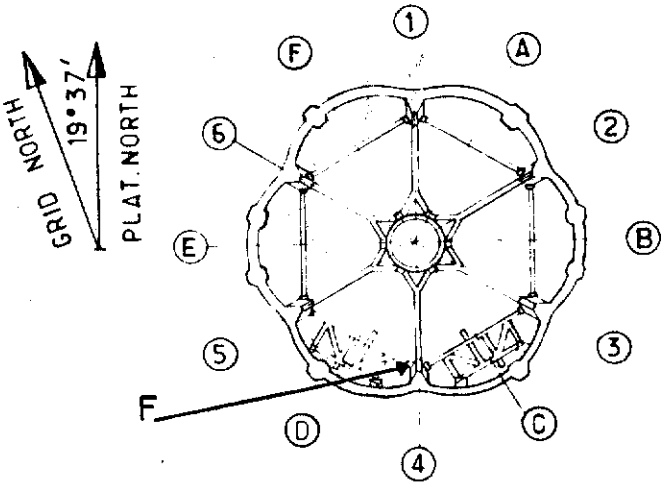

KEY PLAN

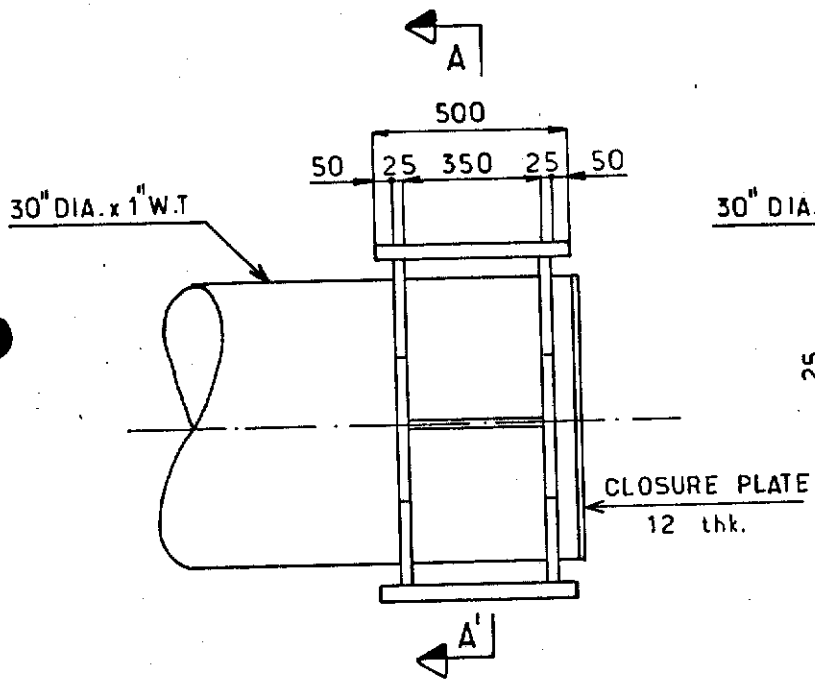

SECTION AA'

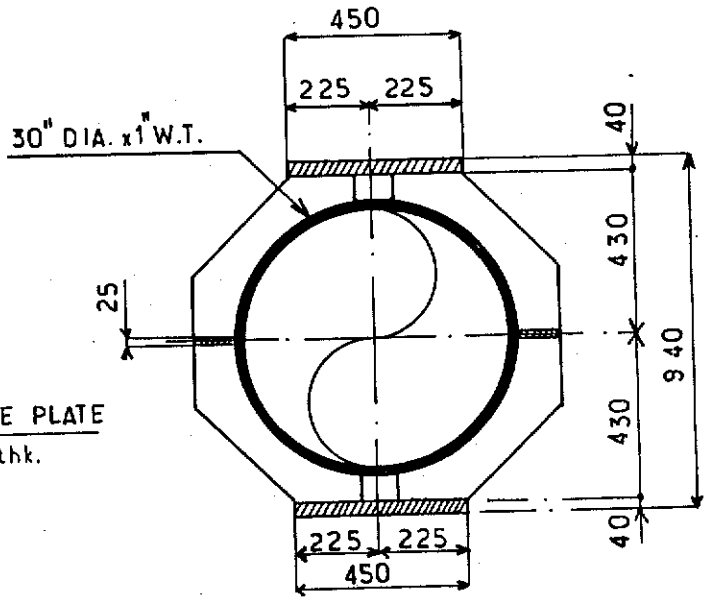

NOTES

FOR LOCATION SEE SK FF.91.36.35.1400.
FOR BOX FOR FREE LOCK SEE SK FF.91.36.35.1416.

Rev.	Date	DESCRIPTION	by	app.
1	12.83	UP DATED	BVH	JLC

Contractor JVD 1029.40.84.

elf aquitaine norge a/s
p.o.box 168
4001 Stavanger

elf
FRIGG FIELD

Job no.	Installation	System
	CDP 1	UNDERWATER
Scale 1:20	FREE LOCK PIPE END ED1 CELL D LEVEL E	
Dwgr. no. FF 91·36·35·1414·	Rev. 1	Sheet

CDP 1 AS BUILT DRAWINGS

REFERENCE DRAWING LIST FOR:

ORIGINATOR	CONSTRUCTION DRAWING REF.	TITLE	Rev	Sheet	Size
C.G. DORIS	A1. MP. QF. 1187.	PIPE END FOR FREE LOCK OF GUIDE FRAME Ø30" LEVEL E. CELL D.	1		A1

ELF DRAWING NUMBER	REVISION Index	REVISION Date	TITLE

Rev.	Date	DESCRIPTION	by	app.

Contractor

elf aquitaine norge a/s
p.o.box 168
4001 Stavanger

elf
FRIGG FIELD

Job no.	Installation	System
	CDP 1	UNDERWATER
Scale		
Dwgr. no. FF ___ ___ 1414	Rev.	Sheet 1

Form 100 318

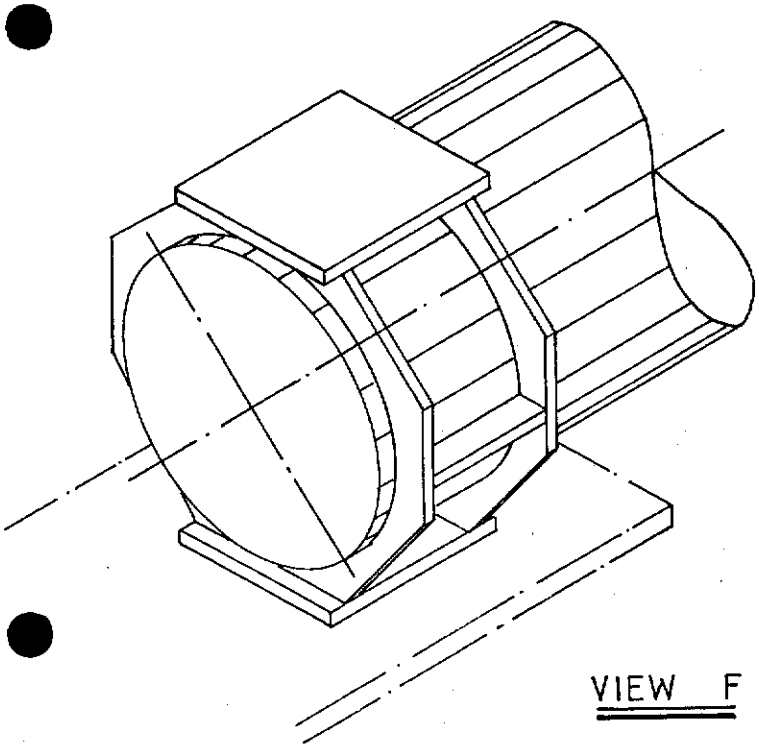

VIEW F

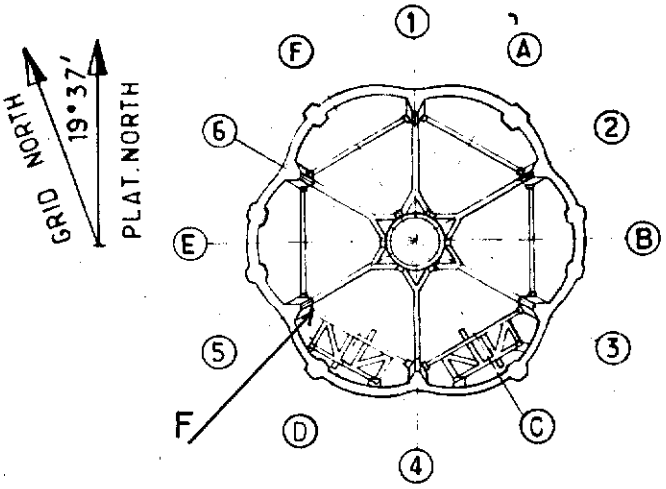

KEY PLAN

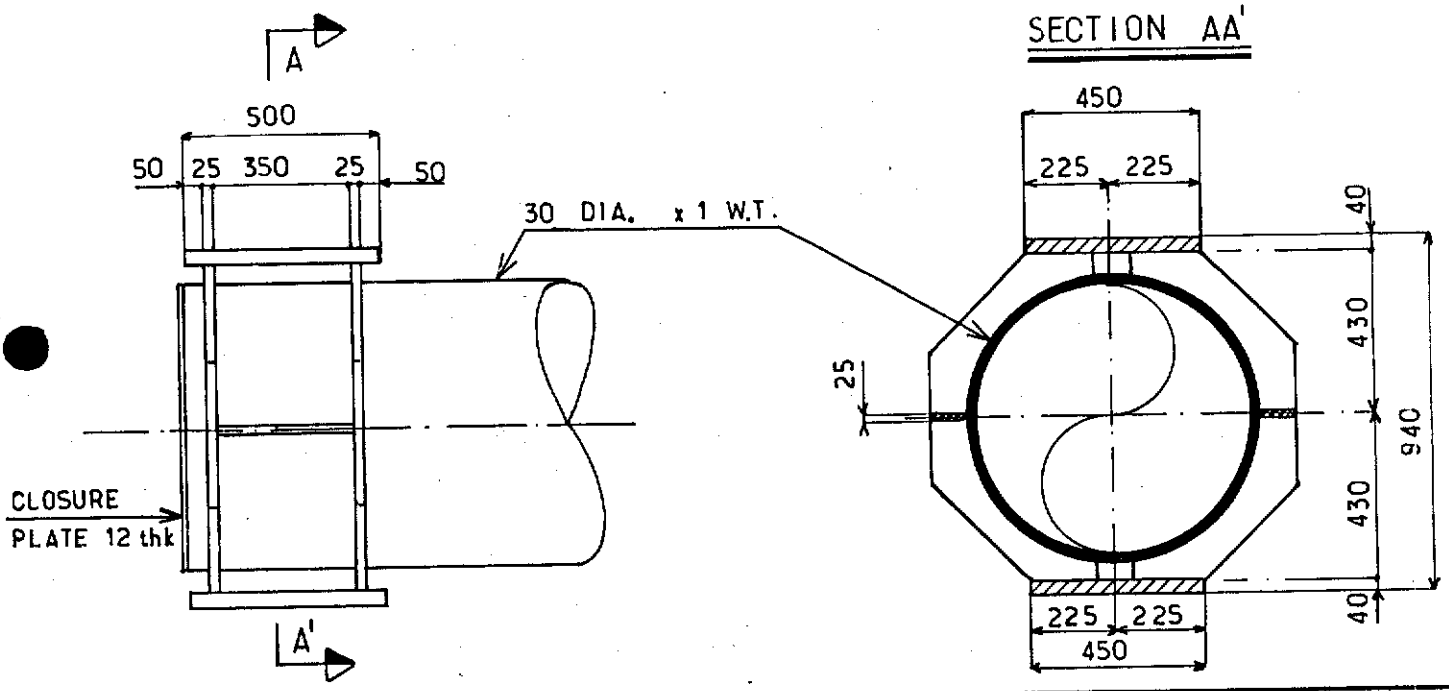

NOTES

FOR LOCATION SEE SK FF. 91.36.35.1400
FOR BOX FOR FREE LOCK SEE SK FF. 91.36.35.1417.

Rev.	Date	DESCRIPTION	by	app.
1	12.83	UP DATED	BVH	J.C.

Contractor JVD 1029.40.85.

elf aquitaine norge a/s
p.o.box 168
4001 Stavanger

elf
FRIGG FIELD

Job no.	Installation	System
	CDP 1	UNDERWATER
Scale 1:20	FREE LOCK PIPE END ED 4 CELL D LEVEL E	
Dwgr. no. FF 91·36·35·1415-	Rev. 1	Sheet /

CDP 1 AS BUILT DRAWINGS

REFERENCE DRAWING LIST FOR:

ORIGINATOR	CONSTRUCTION DRAWING REF.	TITLE	Rev	Sheet	Size
C.G. DORIS	A1. MP. QF. 1187.	PIPE END FOR FREE Lock	1		A1
		OF GUIDE FRAME Ø30"			
		LEVEL E. CELL D.			

ELF DRAWING NUMBER	REVISION		TITLE
	Index	Date	

Rev.	Date	DESCRIPTION	by	app.

Contractor

elf aquitaine norge a/s
p.o.box 168
4001 Stavanger

elf

FRIGG FIELD

Job no.	Installation	System
	CDP 1	UNDERWATER
Scale		
Dwgr. no. FF ___ ___ 1415	Rev	Sheet 1

Form 100 318

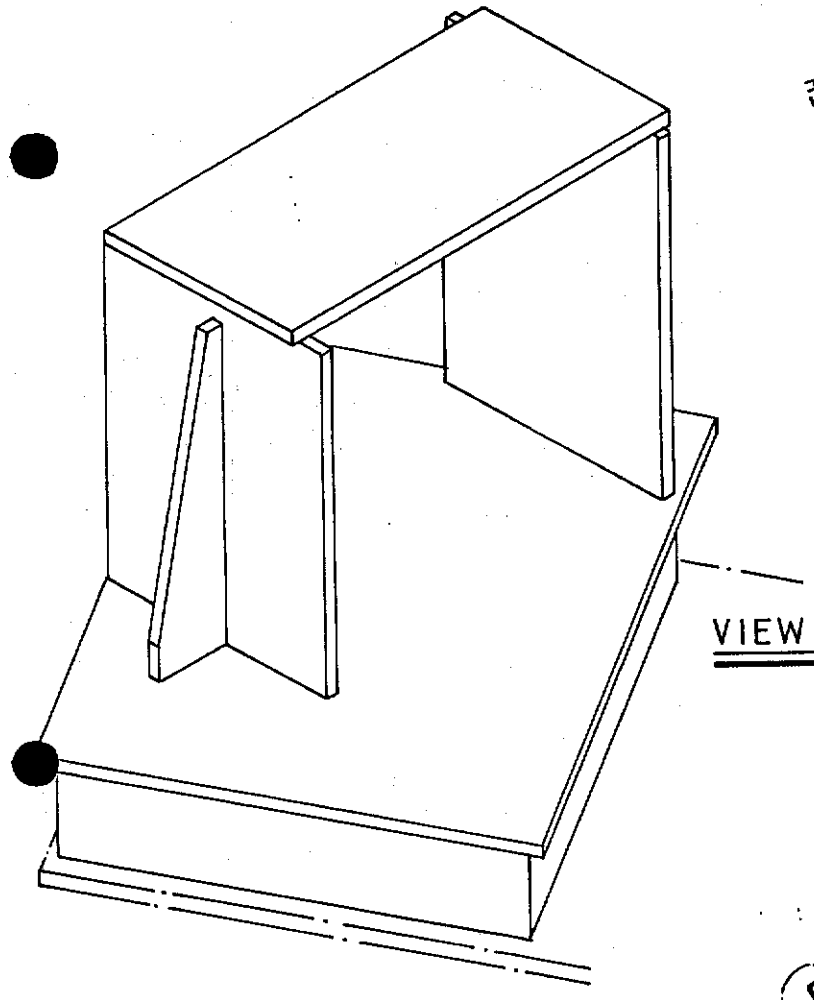

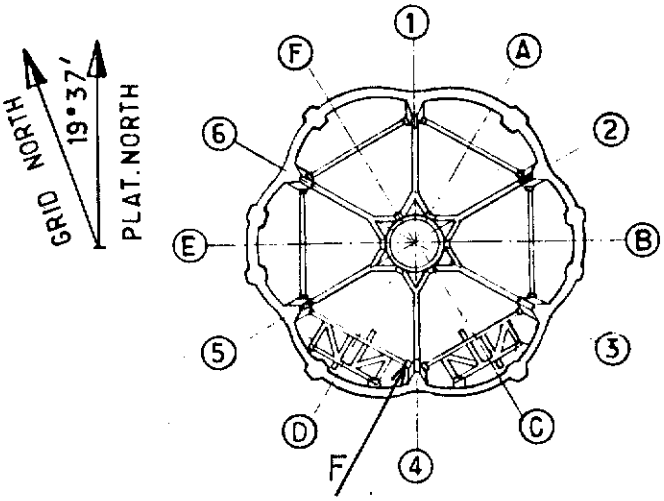

KEY PLAN

VIEW F

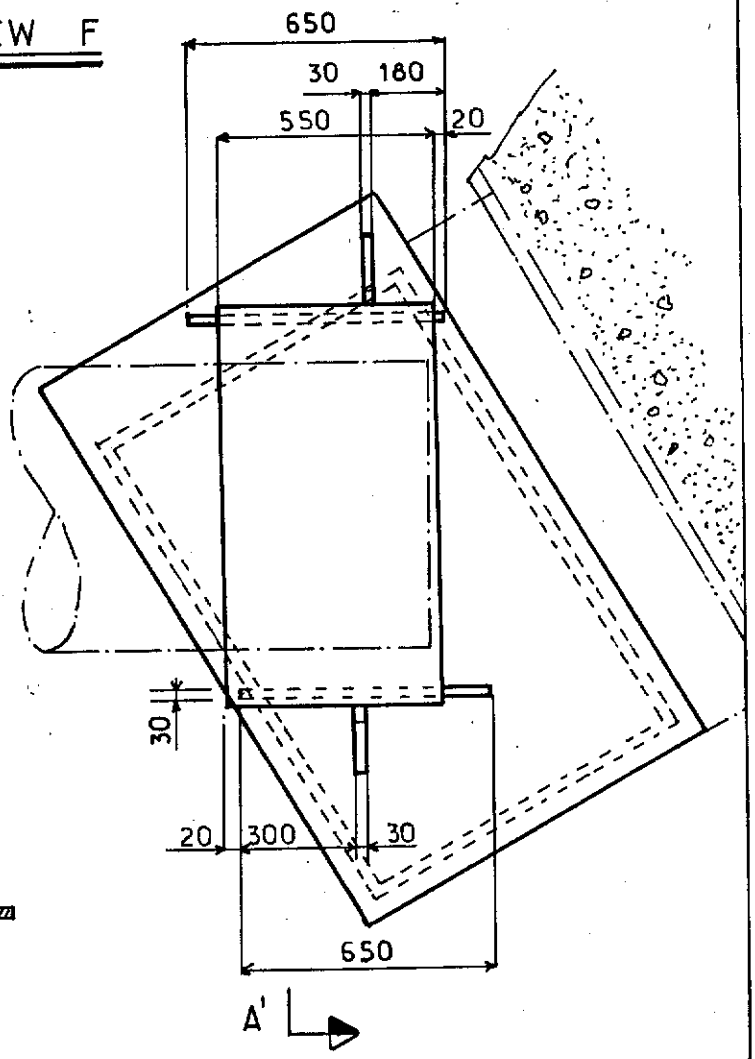

SECTION AA'

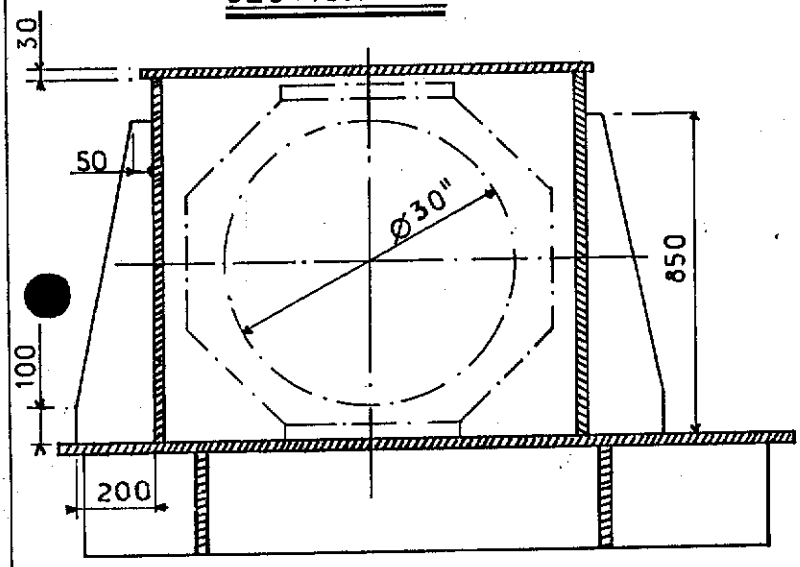

NOTES

FOR LOCATION SEE SK FF_91_36_35_1400.

FOR DETAIL OF FREE LOCK PIPE END SEE SK FF_91_36_35_1414.

Rev.	Date	DESCRIPTION	by	app.
	12.83	UP DATED	BVH	ILC

Contractor JVD 1029_40_86.

elf aquitaine norge a/s
p.o.box 168
4001 Stavanger

elf
FRIGG FIELD

Job no.	Installation	System
	CDP 1	UNDERWATER
Scale 1:20	BOX FOR FREE LOCK ED1 CELL D LEVEL E	
Dwgr. no. FF 91·36·35·1416	Rev 1	Sheet /

CDP 1 AS BUILT DRAWINGS

REFERENCE DRAWING LIST FOR:

ORIGINATOR	CONSTRUCTION DRAWING REF.	TITLE	Rev	Sheet	Size
- C G. DORIS.	A1. MP. QF. 1242	BOX FOR FREE LOCK.	1		A1
		ZONE D . LEVEL E .			

ELF DRAWING NUMBER	REVISION		TITLE
	Index	Date	

Rev.	Date	DESCRIPTION	by	app.

Contractor

elf aquitaine norge a/s
p.o.box 168
4001 Stavanger

elf

FRIGG FIELD

Job no.	Installation	System
	CDP 1	UNDERWATER
Scale	BOXE FOR FREE LOCK ED1	
Dwgr. no. FF 1416	Rev.	Sheet /

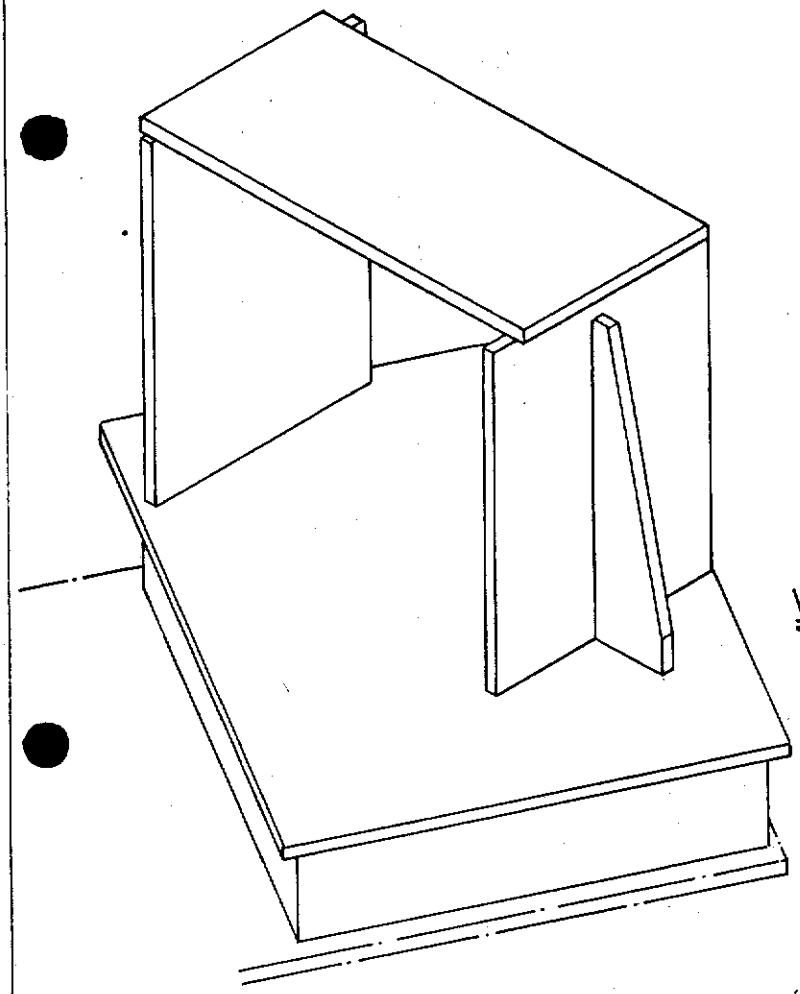

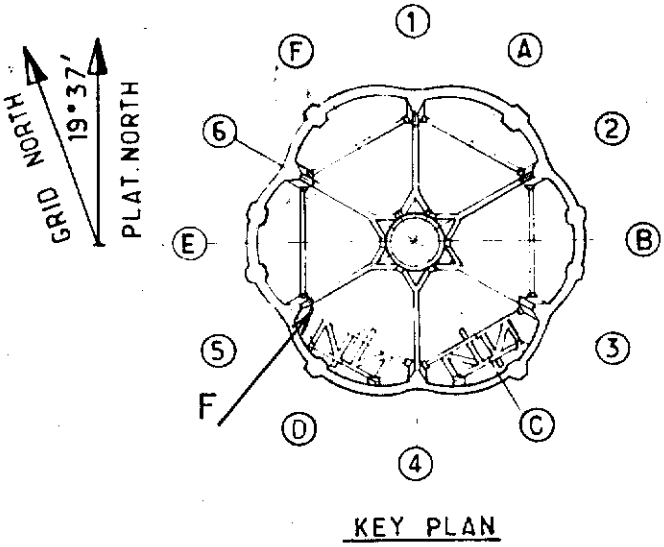

VIEW F

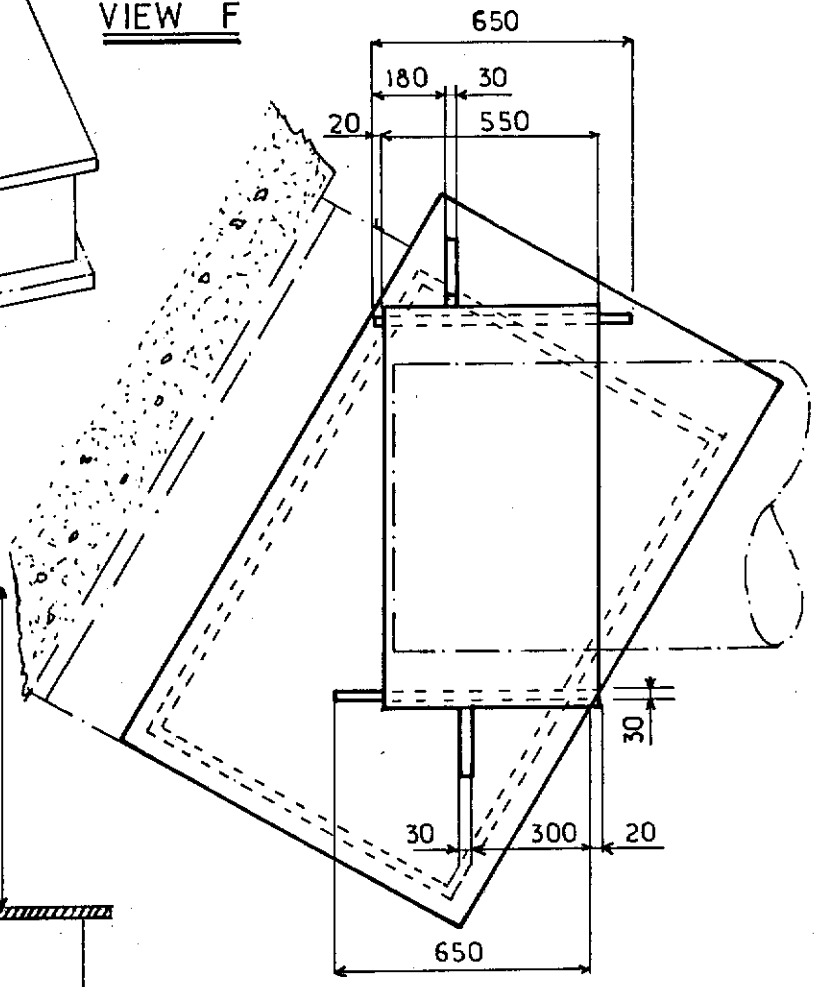

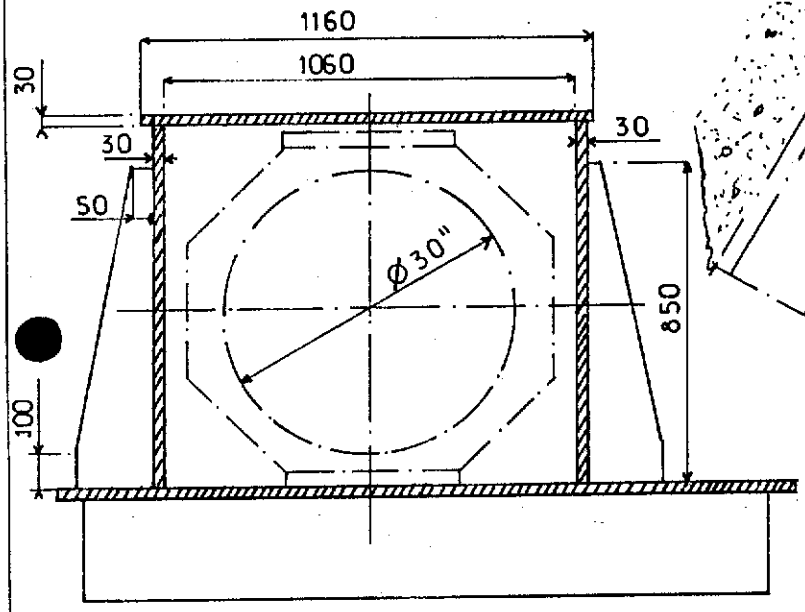

SECTION AA'

NOTES

FOR LOCATION SEE SK FF.91.36.35.1400.
FOR DETAIL OF FREE LOCK PIPE END SEE SK FF.91.36.35.1415.

Rev.	Date	DESCRIPTION	by	app.
1	12.83	UP DATED	B.VH	J.L.C

Contractor JVD 1029 40 87

elf aquitaine norge a/s
p.o.box 168
4001 Stavanger

elf
FRIGG FIELD

Job no.	Installation	System
	CDP 1	UNDERWATER
Scale 1:20	BOX FOR FREE LOCK CELL D LEVEL E	ED4
Dwgr. no. FF 91·36·35·1417	No. 1	Sheet /

CDP 1 AS BUILT DRAWINGS

REFERENCE DRAWING LIST FOR:

ORIGINATOR	CONSTRUCTION DRAWING REF.	TITLE	Rev	Sheet	Size
- C.G. DORIS.	A1. MP. QF. 1242.	BOX FOR FREE LOCK.	1		A1
		ZONE D. LEVEL E.			

ELF DRAWING NUMBER	REVISION Index	REVISION Date	TITLE

Rev.	Date	DESCRIPTION	by	app.

Contractor

elf aquitaine norge a/s
p.o.box 168
4001 Stavanger

elf
FRIGG FIELD

Job no.	Installation	System
	CDP 1	UNDERWATER
Scale	BOXE FOR FREE LOCK ED4	
Dwgr. no. FF 1417	Rev.	Sheet /

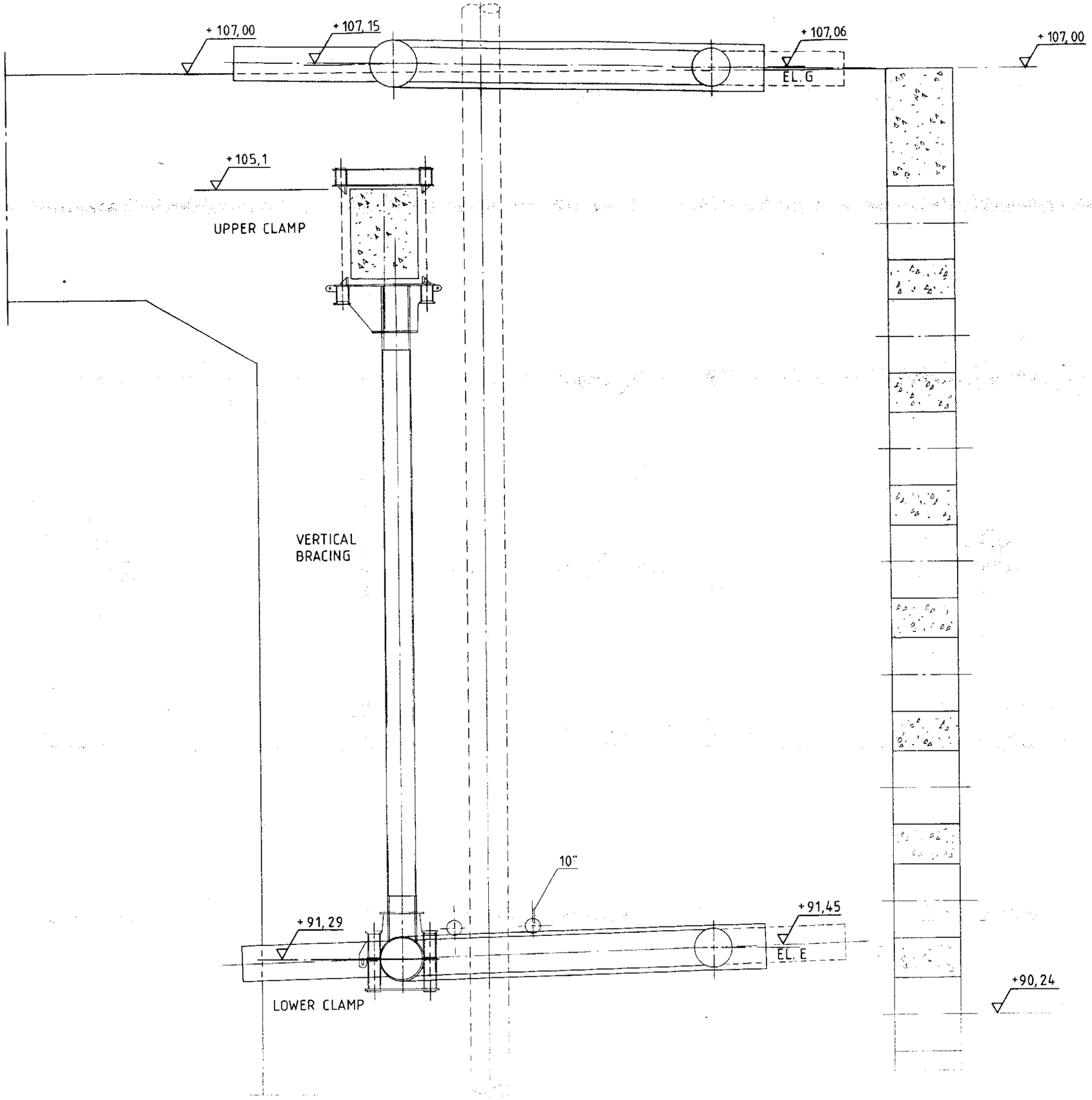

REF. DRG.
FF 91 36 35 1396 VERTICAL BRACING INSTALLATION, ISOMETRIC VIEW.

rev.	date	DESCRIPTION	by	app
0	20.2.86	first issue	T.B.	

elf aquitaine norge as p.o box 168 – 4001 Stavanger

elf

Installation	CDP1
System	UNDERWATER
Job no	
Scale	1:50

GENERAL VIEW OF VERTICAL BRACING IN CELL D LEVEL E

FRIGG FIELD FF 91 36 35 1418 0

CDP 1 AS BUILT DRAWINGS

REFERENCE DRAWING LIST FOR:

ORIGINATOR	CONSTRUCTION DRAWING REF.	TITLE	Rev	Sheet	Size
Bjørge Engineering	FF 91 36 35 1840	Drawing list Cell D			
"	FF 91 36 35 1841	General arrangement Cell D			
"	FF 91 36 35 1842	Upper clamp Cell D			
"	FF 91 36 35 1843	Lower clamp Cell D			
"	FF 91 36 35 1844	Detail 1, 2, 3, 4 & 5 Cell D			
"	FF 91 36 35 1845	Detail 6 Cell D			
"	FF 91 36 35 1846	Detail 7 Cell D			
"	FF 91 36 35 1847	Anodes Cell D			

ELF DRAWING NUMBER	REVISION Index	REVISION Date	TITLE
FF 91 36 35 1856			Grease cup for protection of bolt ends, lower clamp

Rev.	Date	DESCRIPTION	by	app.

Contractor

elf aquitaine norge a/s
p.o.box 168
4001 Stavanger

elf

FRIGG FIELD

Job no.	Installation	System
	CDP 1	UNDERWATER
Scale		
Dwgr. no. FF 1418	Rev. 0	Sheet 1

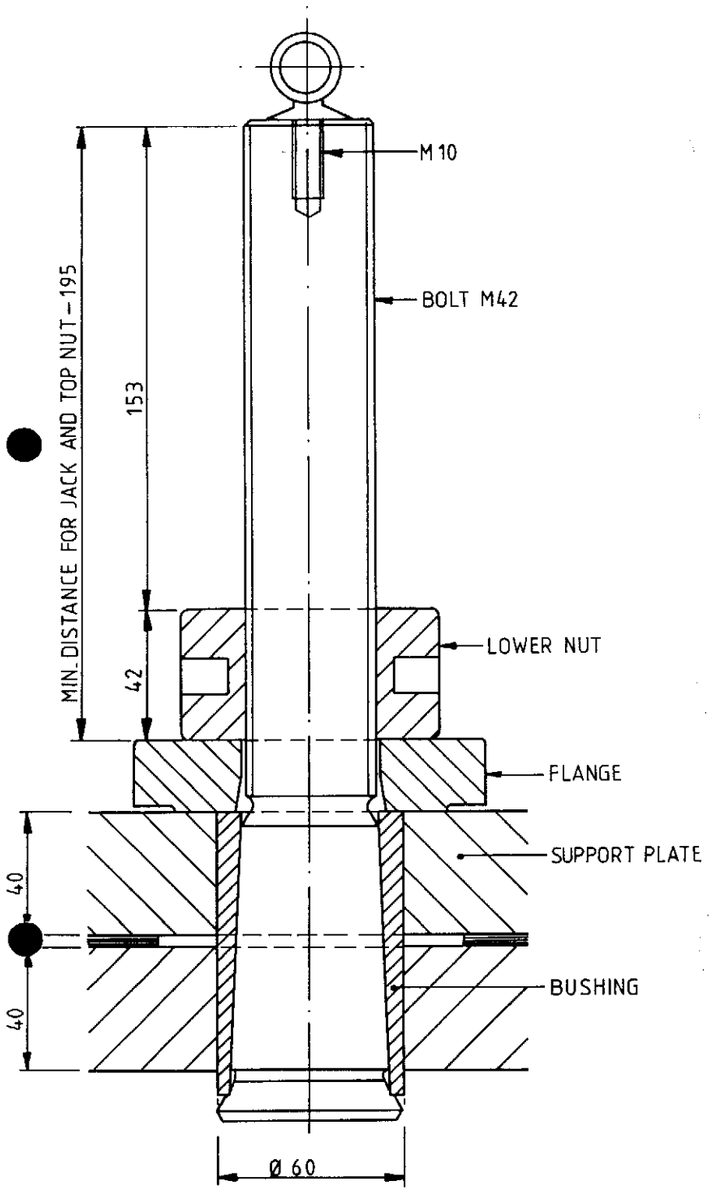

SHEAR KEY AS INSTALLED
1:2

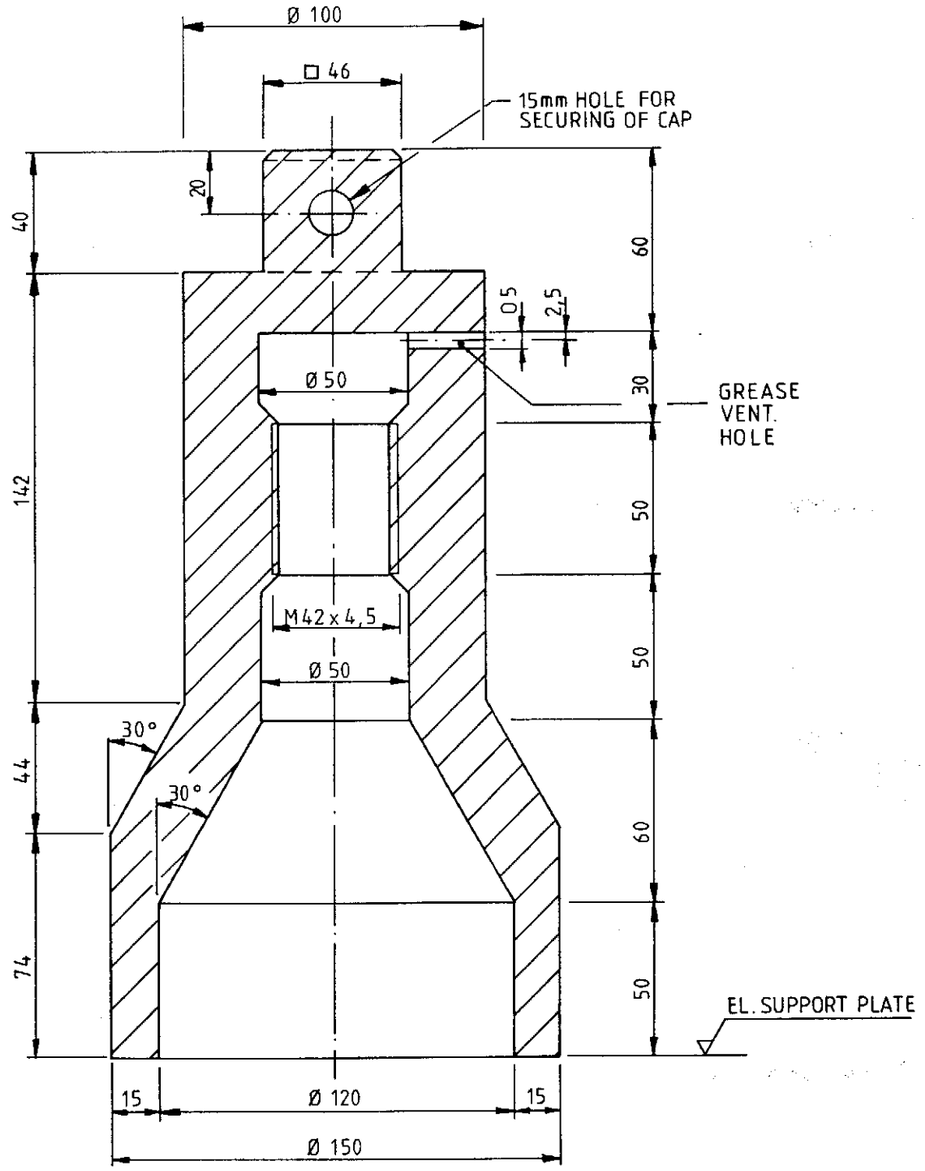

CORROSION PROTECTION CAP
FOR SHEAR KEY BOLT/NUT
1:2

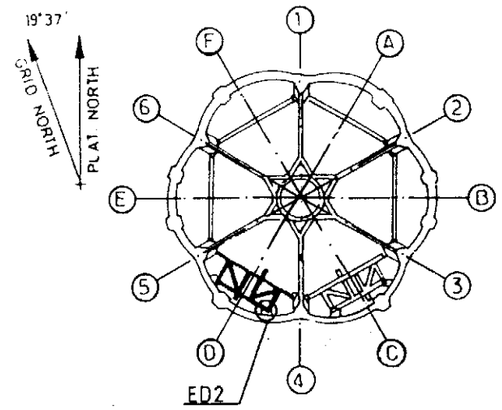

KEY PLAN

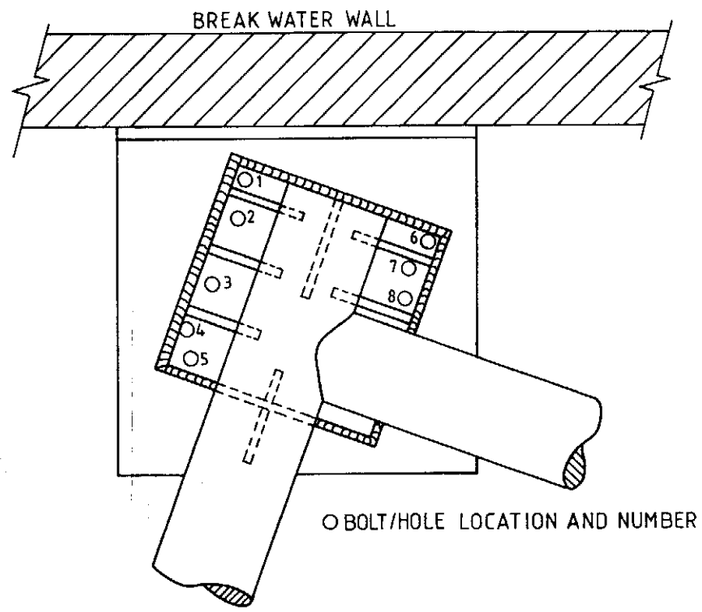

CORBEL PLATE ED 2

Rev.	Date	DESCRIPTION	by	app.
0	25.02.86	First issue	T.B.	

NOTES
NEW SHEAR KEY BOLTS INSTALLED IN HOLE No. 1,2,6 & 7.
FOR LOCATION, SEE FF 91 36 35 1378

elf aquitaine norge a/s
P.O. Box 168
4001 Stavanger

FRIGG FIELD

Installation: CDP1
System: UNDERWATER
Job no.
Scale: AS NOTED
SHEAR KEY BOLTS FOR CONDUCTOR GUIDE FRAME SUPPORT ED 2 IN CELL C AT ELEV. E
Drwg. no. FF 91 36 35 1419
Rev. 0
Sheet /

Size A3 Form 100.314

CDP 1 AS BUILT DRAWINGS

REFERENCE DRAWING LIST FOR:

ORIGINATOR	CONSTRUCTION DRAWING REF.	TITLE	Rev	Sheet	Size
ELF	SST 5440	Shear Rey bolt installation			

ELF DRAWING NUMBER	REVISION Index	REVISION Date	TITLE

Rev.	Date	DESCRIPTION	by	app.
0	24/2-86		T.B.	

Contractor

elf aquitaine norge a/s
p.o.box 168
4001 Stavanger

elf

FRIGG FIELD

Job no.	Installation	System
	CDP 1	UNDERWATER
Scale		
Dwgr. no. FF 1419	Rev.	Sheet 1

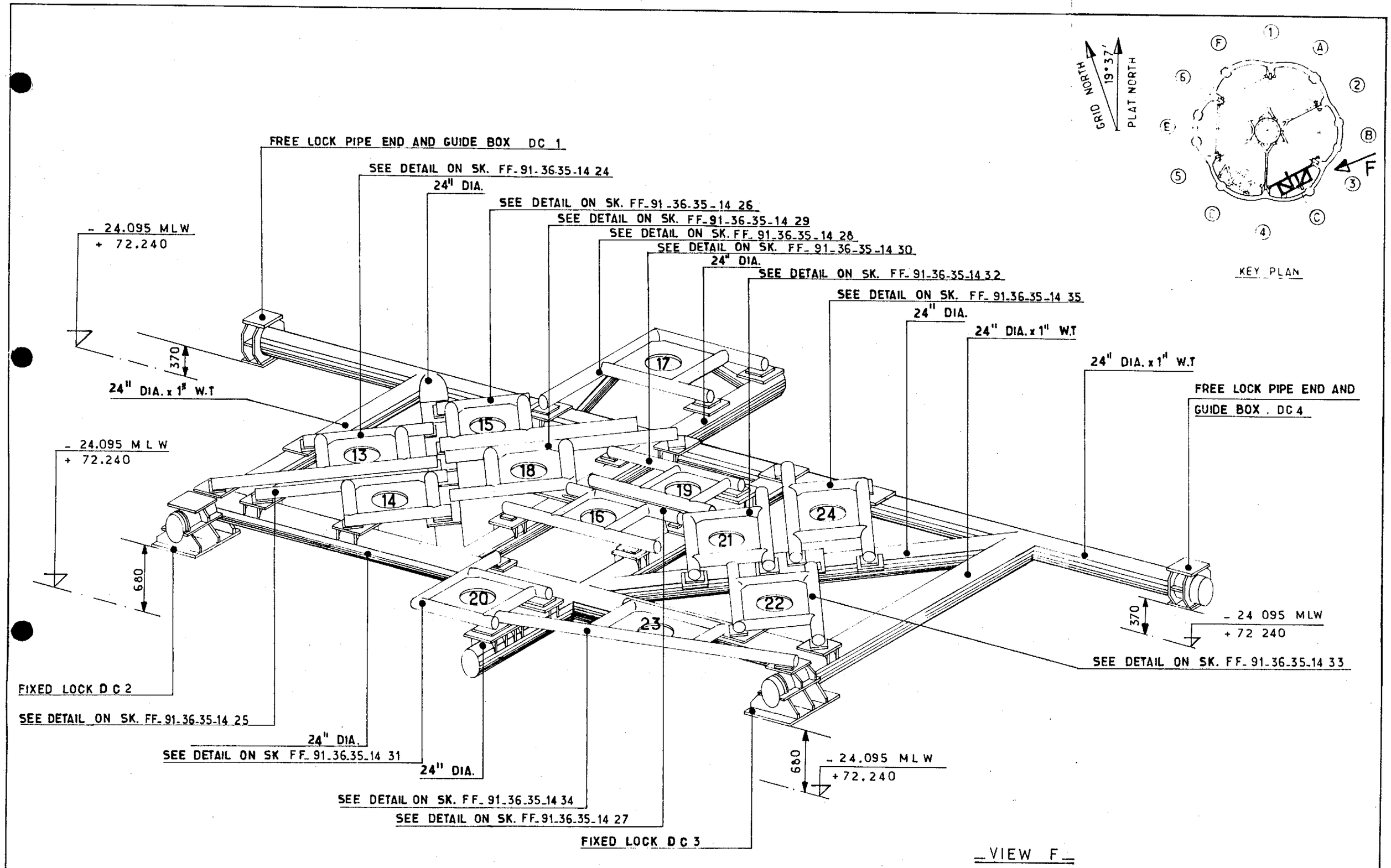

NOTES

FOR FREE LOCK PIPE ENDS AND GUIDE BOXES SEE SK FF 91-36-35-1436/1437/1438/1439.

Rev.	Date	DESCRIPTION	by	app.
1	12.83	UP DATED	BVH	JLC

Contractor JVD_1029_40.92

elf aquitaine norge a/s
p.o.box 168
4001 Stavanger

elf
FRIGG FIELD

Job no.	Installation	System
	CDP 1	UNDERWATER
Scale —	GENERAL VIEW OF CONDUCTOR GUIDE FRAME CELL C LEVEL D	
Dwgr. no	FF 91-36-35-14 22-	1

CDP 1 AS BUILT DRAWINGS

REFERENCE DRAWING LIST FOR: CONDUCTOR GUIDE FRAME

ORIGINATOR	CONSTRUCTION DRAWING REF.	TITLE	Rev	Sheet	Size
C.G. DORIS	AO MP QF 1040	WORKING DRAWING AND CUTTING OUT OF GUIDE FRAME	0		AO
" "	A1 MP QF 1062	GENERAL LAYOUT OF GUIDE FRAME	1		A1
" "	A1 MP QF 1053	GENERAL LAYOUT OF BASE PLATES	2		A1
" "	AO MP QF 1112	POSITION OF DRILLING HOLES	2		AO
" "	A1 MP QF 1119	FIXED LOCK FOR GUIDE FRAME Ø 24" DC I	1		A1
" "	A1 MP QF 1120	FIXED LOCK FOR GUIDE FRAME Ø 24" DC II	1		A1
" "	A1 MP QF 1159	PIPE END OF GUIDE FRAME	1		A1
" "	A1 MP QF 1186	PIPE END FOR FREE LOCK OF GUIDE FRAME	1		A1
" "	A1 MP QF 1239	BOX FOR FREE LOCK	1		A1

ELF DRAWING NUMBER	REVISION Index	REVISION Date	TITLE

Rev.	Date	DESCRIPTION	by	app.

Contractor

elf aquitaine norge a/s
p.o.box 168
4001 Stavanger

elf
FRIGG FIELD

Job no.	Installation	System
	CDP 1	UNDERWATER
Scale		
Dwgr. no. FF 1422	Rev.	Sheet /

Form 100 318

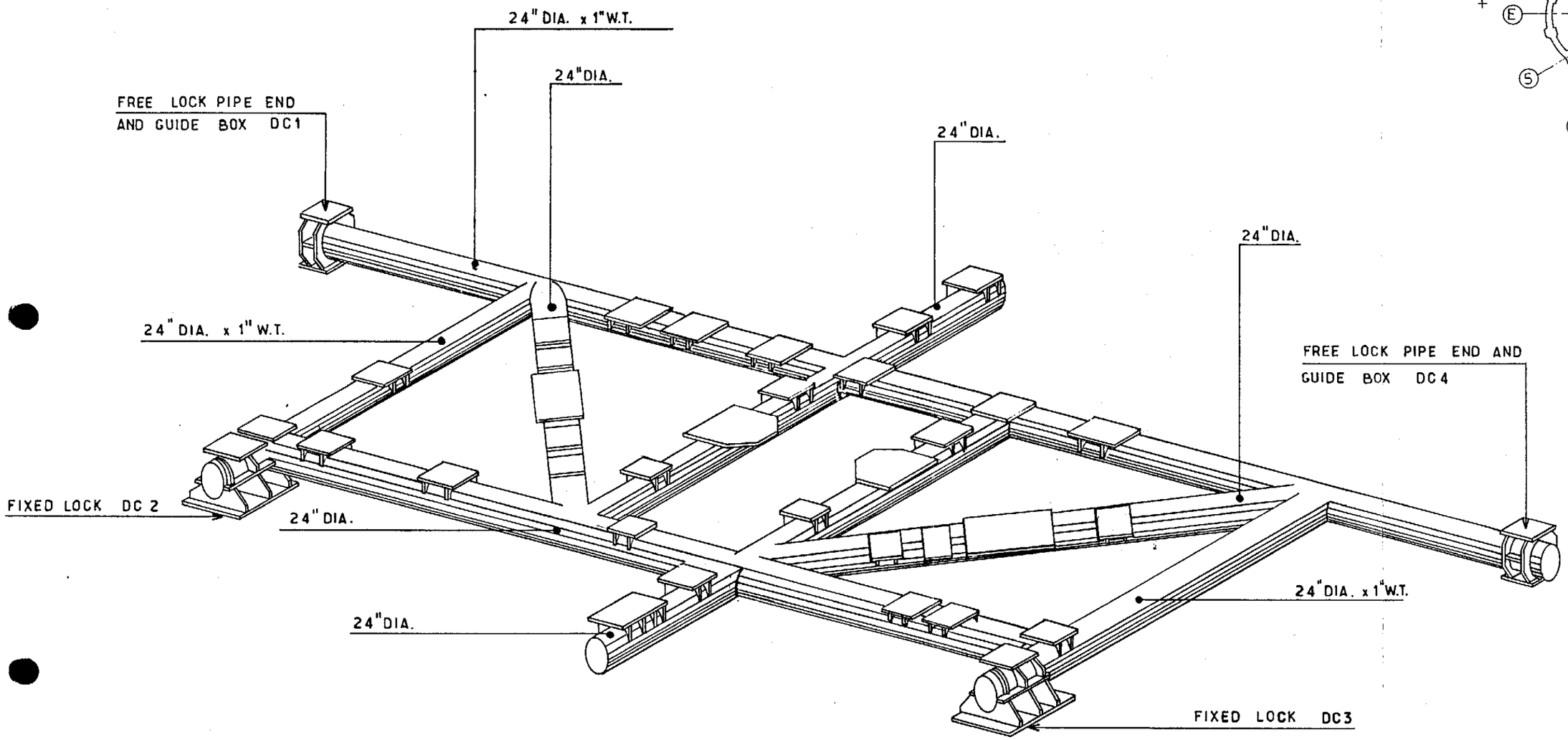

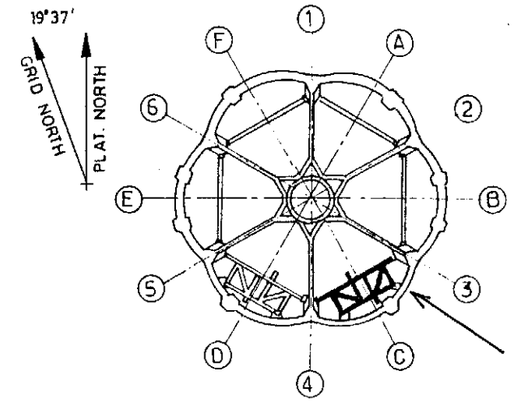

KEY PLAN

NOTES

FOR SECONDARY FRAME DETAILS SEE SK FF.91.36.35.1424. TO FF.91.36.35.1435
FOR FREE LOCK PIPE ENDS AND GUIDE BOXES SEE SK FF.91.36.35.1436/1437/1438/1439.

Rev.	Date	DESCRIPTION	by	app.
1	12.83	UP DATED	B.VH	J.C

Contractor JVD 1029-40-93

elf aquitaine norge a/s
p.o.box 168
4001 Stavanger

elf
FRIGG FIELD

Job no.	Installation	System
	CDP 1	UNDERWATER
Scale —	GENERAL VIEW OF SECONDARY FRAME SUPPORT CELL C LEVEL D	
Dwgr. no FF 91-36-35-1423.	1	—

CDP 1 AS BUILT DRAWINGS

REFERENCE DRAWING LIST FOR:

ORIGINATOR	CONSTRUCTION DRAWING REF.	TITLE	Rev	Sheet	Size
C.G. DORIS	A1.MP.QF.1053	GENERAL LAYOUT OF THE	1		A1
" "		BASE PLATES			
" "		LEVEL D CELL C			
" "	A1.MP.QF.1147	DETAIL OF BASE PLATE	1		A1
" "	A1.MP.QF.1148	" " " "	1		A1
" "	A1.MP.QF.1149	" " " "	1		A1
" "	A1.MP.QF.1154	" " " "	1		A1

ELF DRAWING NUMBER	REVISION Index	REVISION Date	TITLE

Rev.	Date	DESCRIPTION	by	app.

Contractor

elf aquitaine norge a/s
p.o.box 168
4001 Stavanger

elf

FRIGG FIELD

Job no.	Installation	System
	CDP 1	UNDERWATER
Scale		
Dwgr. no. FF 1423	Rev.	Sheet /

BIC 001 mm

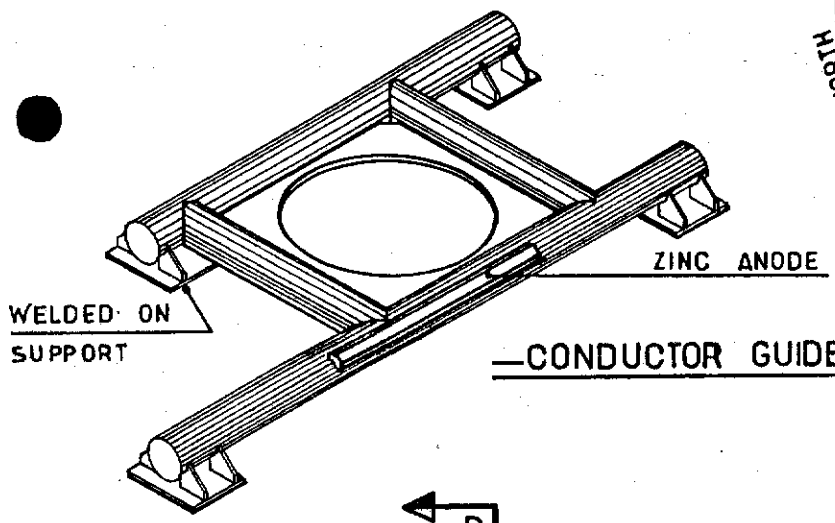

—CONDUCTOR GUIDE N°13—

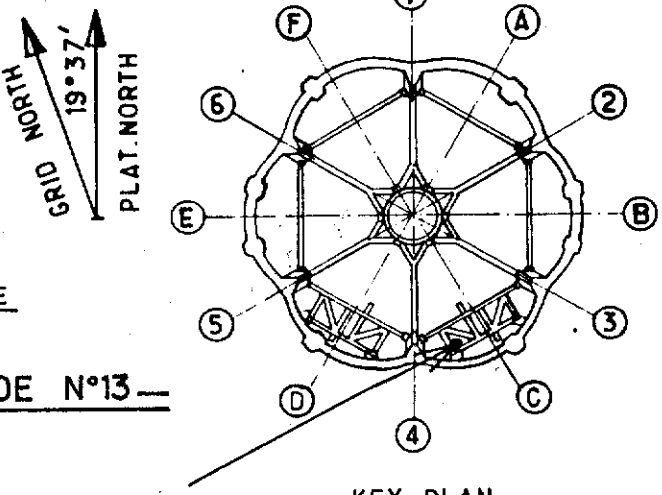

KEY PLAN

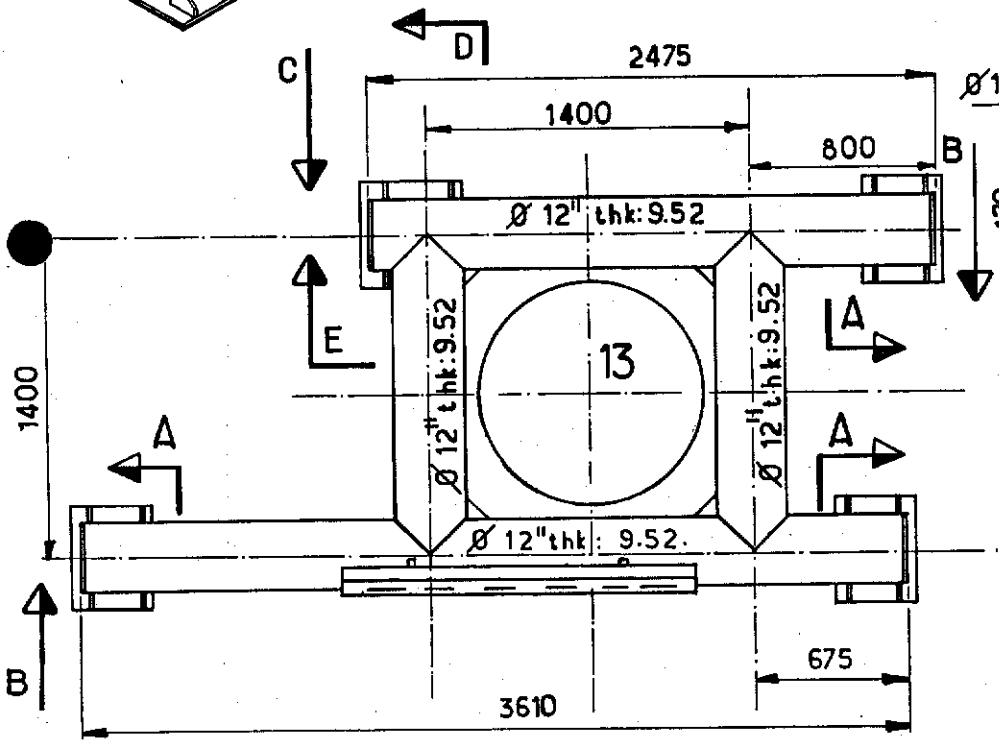

—PLAN VIEW—

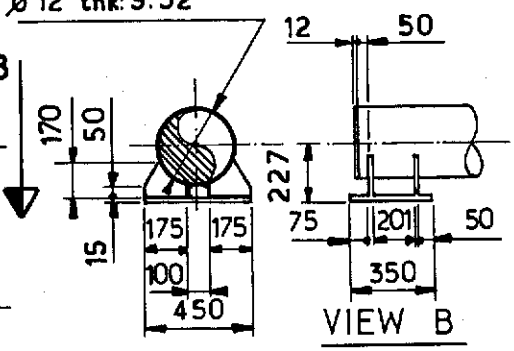

SECTION A

VIEW B

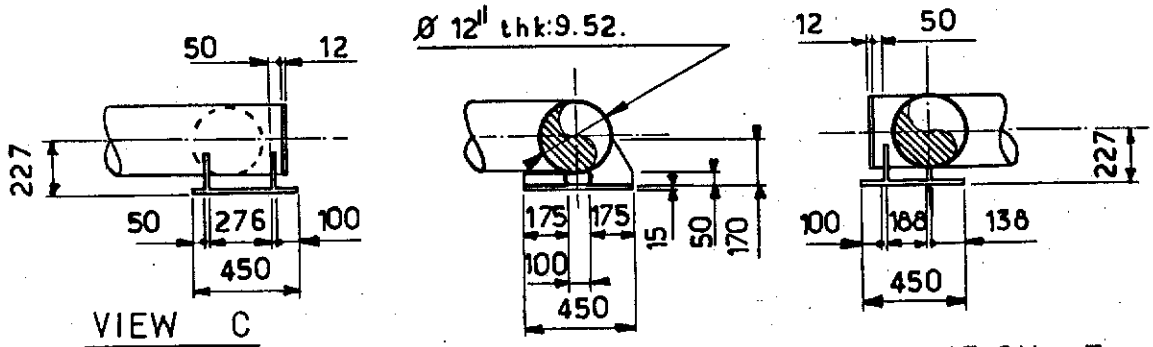

VIEW C

SECTION D

SECTION E

NOTES

FOR LOCATION SEE SK FF 91-36-35-1422
FOR CONDUCTOR SLEEVE SEE SK FF-91-36-35-1491
FOR ZINC ANODE SEE SK FF 91 36 35

Rev.	Date	DESCRIPTION	by	app.
1	12.83	UP DATED	BVH	JLC

Contractor JVD 1029_40_94

elf aquitaine norge a/s
p.o.box 168
4001 Stavanger

elf
FRIGG FIELD

Job no.	Installation	System
	CDP 1	UNDERWATER

Scale 1:33

CONDUCTOR GUIDE N°13 CELL C
SECONDARY FRAME LEVEL D

Dwgr. no. FF 91.36.35.1424

Rev. 1

Sheet /

Form 100 318

CDP 1 AS BUILT DRAWINGS

REFERENCE DRAWING LIST FOR:

ORIGINATOR	CONSTRUCTION DRAWING REF.	TITLE	Rev	Sheet	Siz
C.G. DORIS	AI. MP. QF. 1072	SECONDARY FRAME FOR	1		AI.
		RULING OF THE CONDUCTOR			
		SELEEVE ZONE C.			

ELF DRAWING NUMBER	REVISION Index	REVISION Date	TITLE

Rev.	Date	DESCRIPTION	by	app.

Contractor

elf aquitaine norge a/s
p.o.box 168
4001 Stavanger

elf
FRIGG FIELD

Job no.	Installation	System
	CDP 1	UNDERWATER
Scale		
Dwgr. no. FF 1424	Rev.	Sheet /

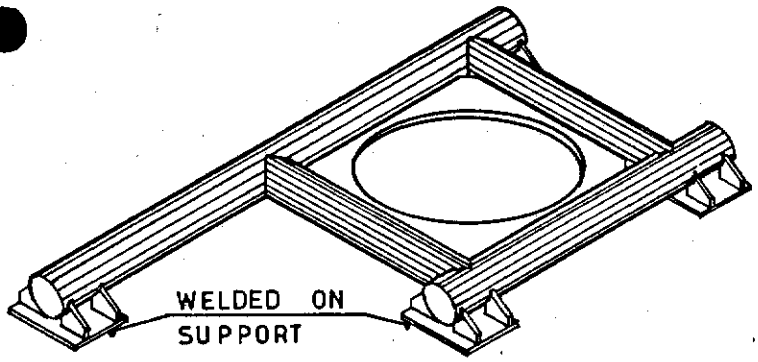

— CONDUCTOR GUIDE N°14 —

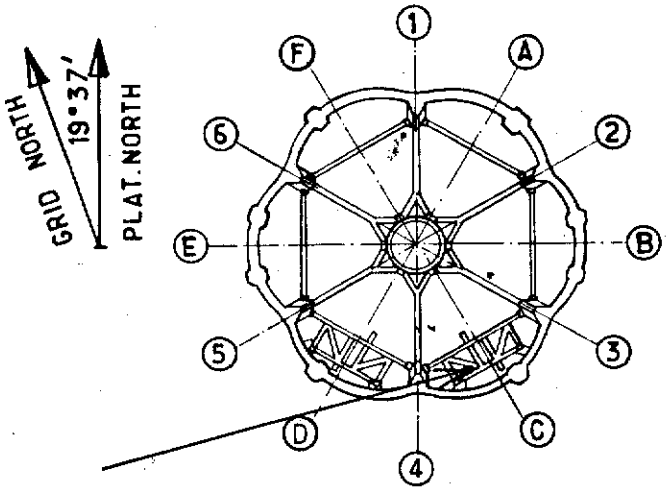

KEY PLAN

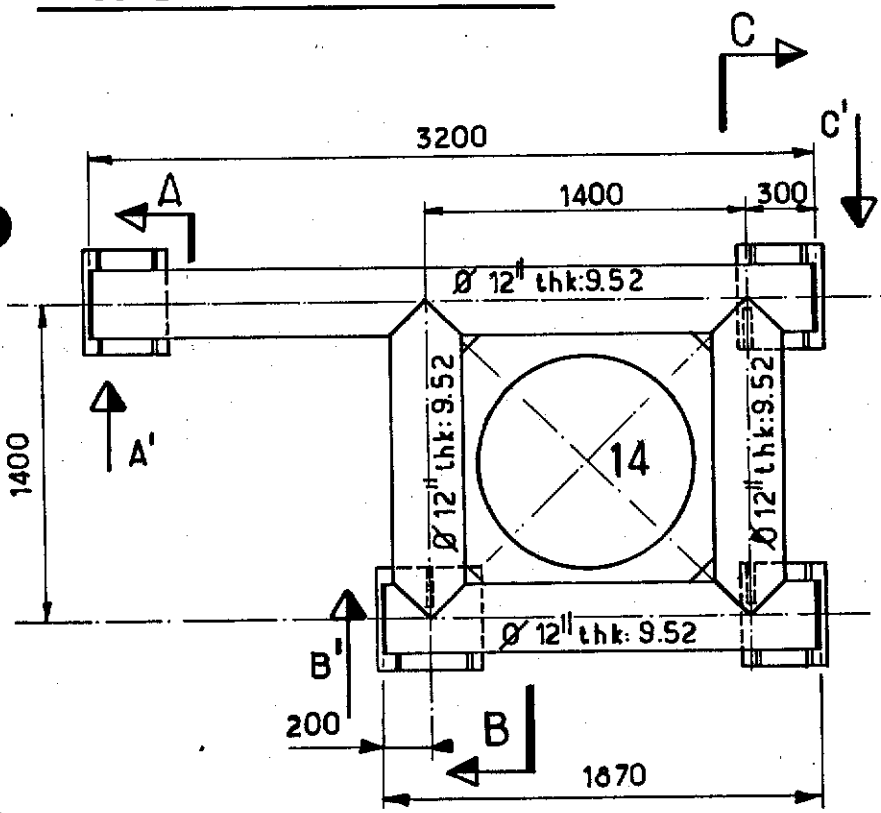

— PLAN VIEW —

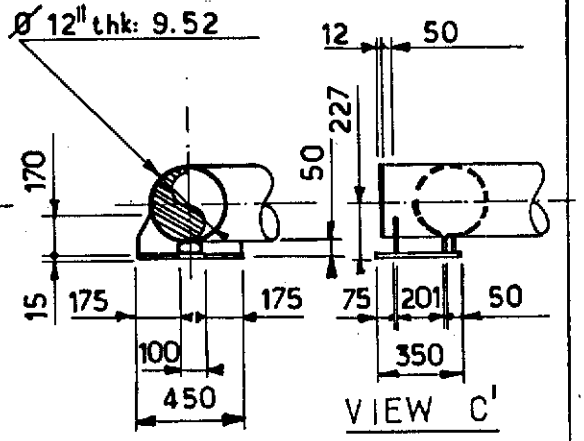

SECTION C

VIEW C'

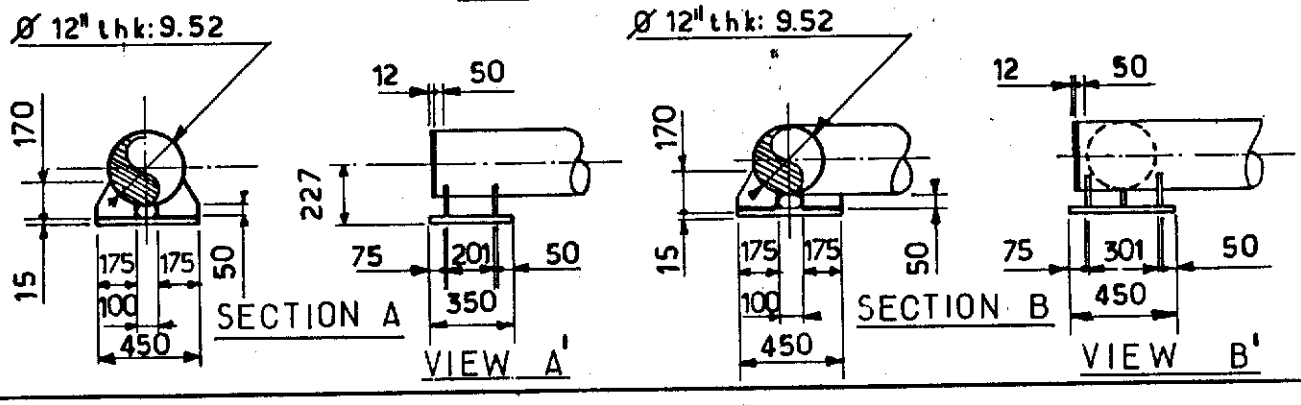

SECTION A

VIEW A'

SECTION B

VIEW B'

NOTES FOR LOCATION SEE SK FF-91.36.35.1422
FOR CONDUCTOR SLEEVE SK FF-91-36-35-1491.

Rev.	Date	DESCRIPTION	by	app.
1	12.83	UP DATED	BVH	

Contractor JVD 1029_40_95_

elf aquitaine norge a/s
p.o.box 168
4001 Stavanger

elf
FRIGG FIELD

Job no.	Installation	System
	CDP 1	UNDERWATER
Scale 1:33	CONDUCTOR GUIDE N°14 CELL C SECONDARY FRAME LEVEL D	
Dwgr. no. FF-91-36.35-1425	Rev. 1	Sheet /

Form 100 318

CDP 1 AS BUILT DRAWINGS

REFERENCE DRAWING LIST FOR:

ORIGINATOR	CONSTRUCTION DRAWING REF.	TITLE	Rev	Sheet	Siz
C.G. DORIS	A1. MP. QF. 1073	SECONDARY FRAME FOR	1		A1
		RULING OF THE CONDUCTOR			
		SELEEVE ZONE C.			

ELF DRAWING NUMBER	REVISION Index	REVISION Date	TITLE

Rev.	Date	DESCRIPTION	by	app.

Contractor

elf aquitaine norge a/s
p.o.box 168
4001 Stavanger

elf
FRIGG FIELD

Job no.	Installation	System
	CDP 1	UNDERWATER
Scale		
Dwgr. no. FF 1425		

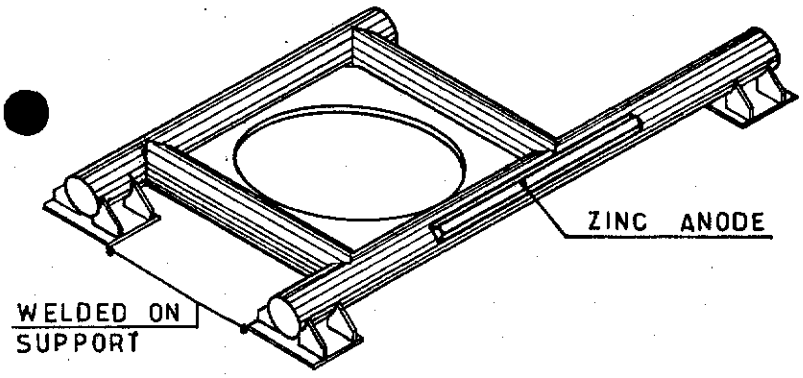

CONDUCTOR GUIDE N°15

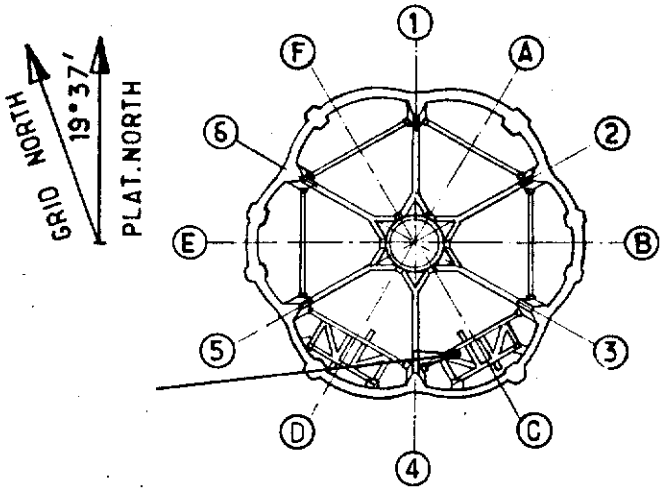

KEY PLAN

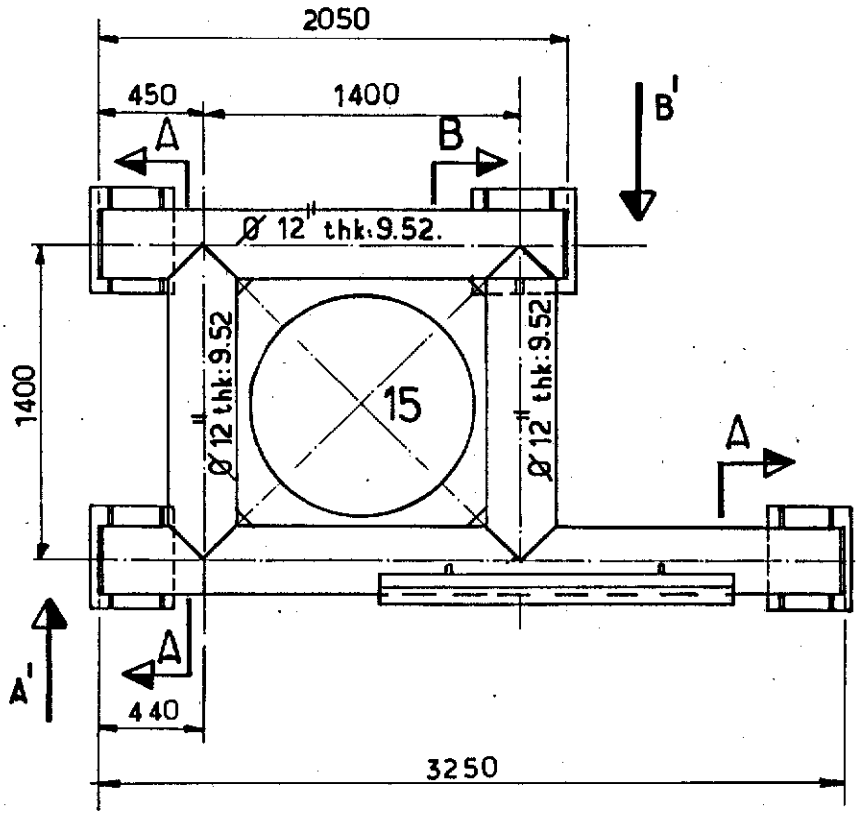

PLAN VIEW

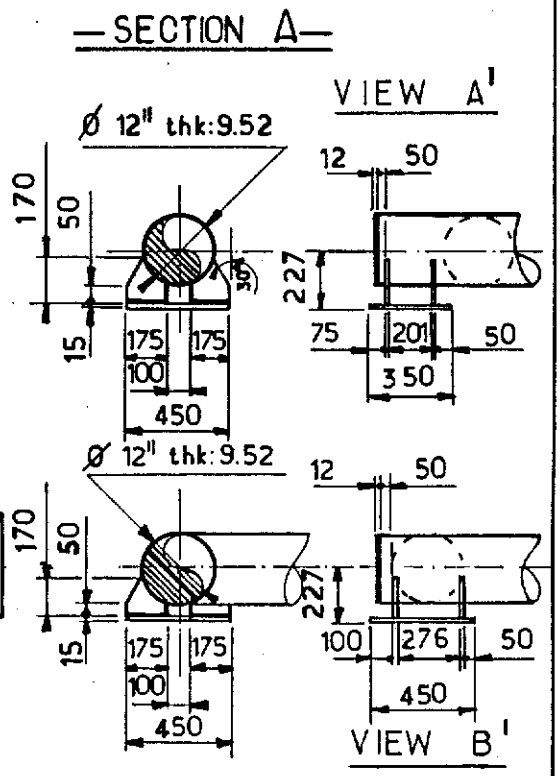

NOTES

FOR LOCATION SEE SK FF 91.36.35.1422.
FOR CONDUCTOR SLEEVE SEE SK FF.91.36.35.1491
FOR ZINC ANODE SEE SK FF.91.36.35.1587

Rev.	Date	DESCRIPTION	by	app.
1	1283	UP DATED	B.V.H	J.L.C

Contractor JVD 1029_40_96_

elf aquitaine norge a/s
p.o.box 168
4001 Stavanger

elf
FRIGG FIELD

Job no.	Installation	System
	CDP 1	UNDERWATER
Scale 1:33	CONDUCTOR GUIDE N°15 CELL C SECONDARY FRAME LEVEL D	
Dwgr. no. FF 91_36_35_1426	Rev. 1	Sheet /

Form 100 318

CDP 1 AS BUILT DRAWINGS

REFERENCE DRAWING LIST FOR:

ORIGINATOR	CONSTRUCTION DRAWING REF.	TITLE	Rev	Sheet	Siz
C.G. DORIS	A1. MP. QF. 1071	SECONDARY FRAME FOR	1		A1
		RULING OF THE CONDUCTOR			
		SELEEVE ZONE C.			

ELF DRAWING NUMBER	REVISION Index	REVISION Date	TITLE

Rev.	Date	DESCRIPTION	by	app.

Contractor

elf aquitaine norge a/s
p.o.box 168
4001 Stavanger

elf

FRIGG FIELD

Job no.	Installation	System
	CDP 1	UNDERWATER
Scale		
Dwgr. no. FF 1426		

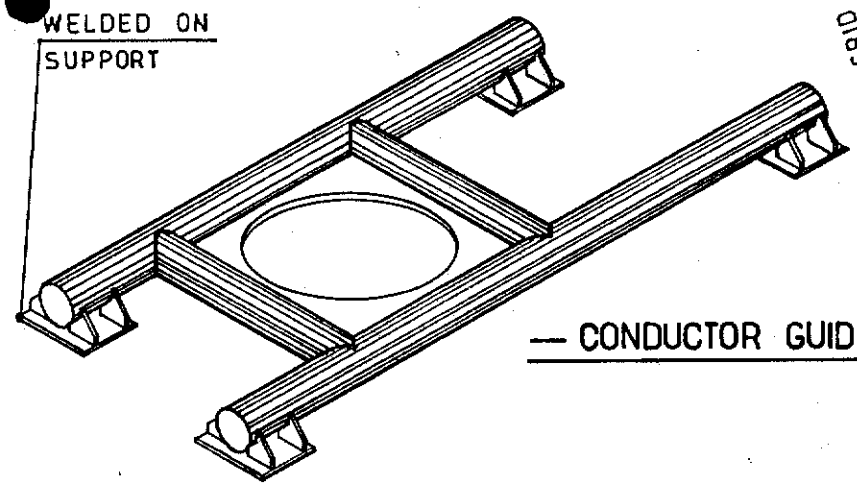

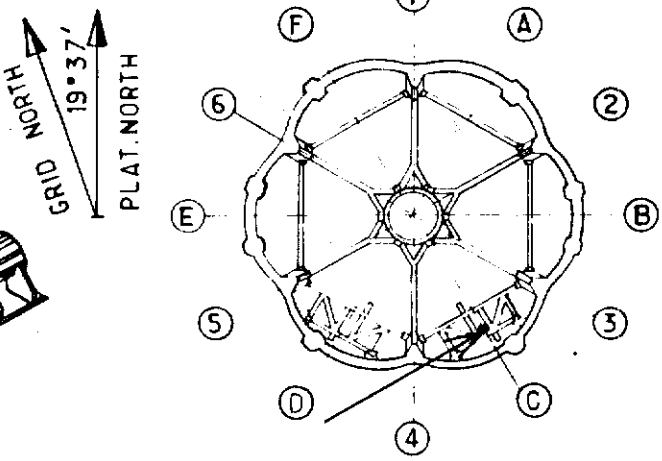

KEY PLAN

— CONDUCTOR GUIDE N°16 —

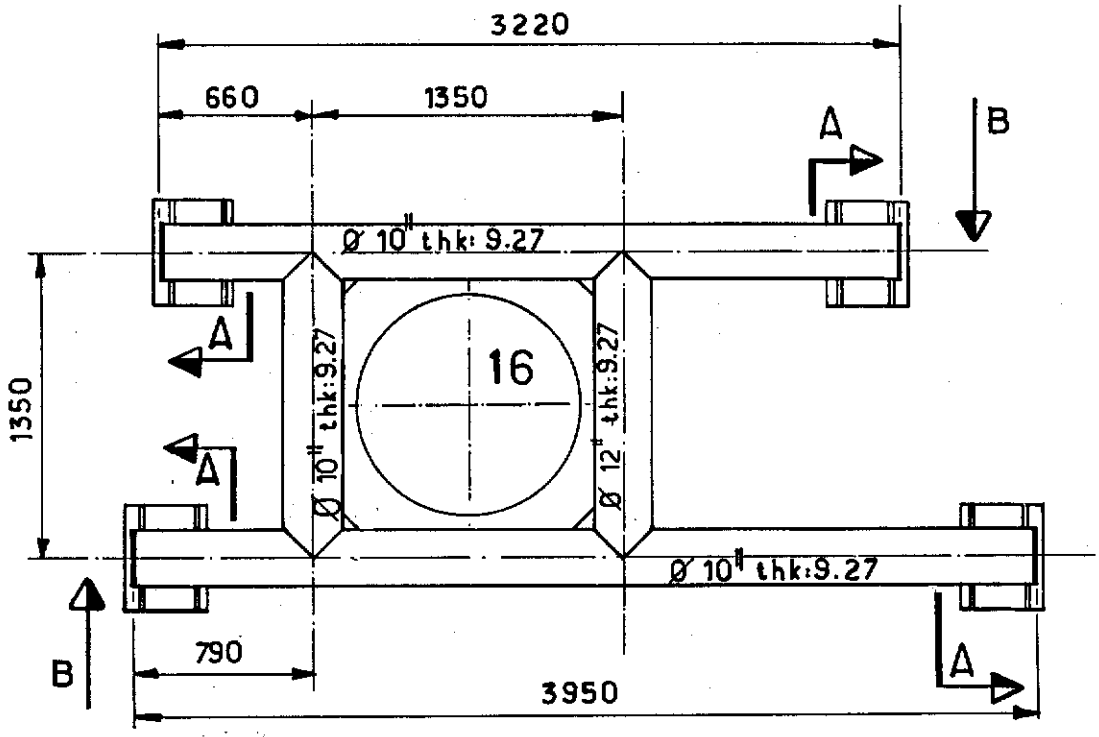

— PLAN VIEW —

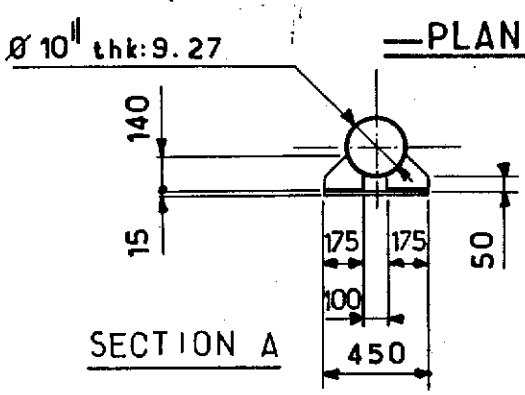

SECTION A

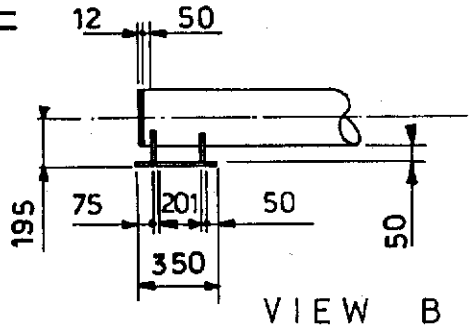

VIEW B

NOTES

FOR LOCATION SEE SK FF 91.36.35.1422.
FOR CONDUCTOR SLEEVE SEE SK FF.91.36.35.1491.

Rev.	Date	DESCRIPTION	by	app.
1	12.83	UP DATED	B.VH	J.L.C

Contractor JVD 1029_40.97_

elf aquitaine norge a/s
p.o.box 168
4001 Stavanger

elf
FRIGG FIELD

Job no.	Installation	System
	CDP 1	UNDERWATER
Scale 1:33	CONDUCTOR GUIDE N°16 CELL C SECONDARY FRAME LEVEL D	
Dwgr. no. FF 91_36_35_1427	Rev 1	Sheet /

Form 100 318

CDP 1 AS BUILT DRAWINGS

REFERENCE DRAWING LIST FOR:

ORIGINATOR	CONSTRUCTION DRAWING REF.	TITLE	Rev	Sheet	Siz
C.G. DORIS	A1. MP. QF. 1076	SECONDARY FRAME FOR	2		A1
		RULING OF THE CONDUCTOR			
		SELEEVE ZONE C.			

ELF DRAWING NUMBER	REVISION Index	REVISION Date	TITLE

Rev.	Date	DESCRIPTION	by	app.

Contractor

elf aquitaine norge a/s
p.o.box 168
4001 Stavanger

elf
FRIGG FIELD

Job no.	Installation	System
	CDP 1	UNDERWATER
Scale		
Dwgr. no. FF 1427	Rev.	Sheet

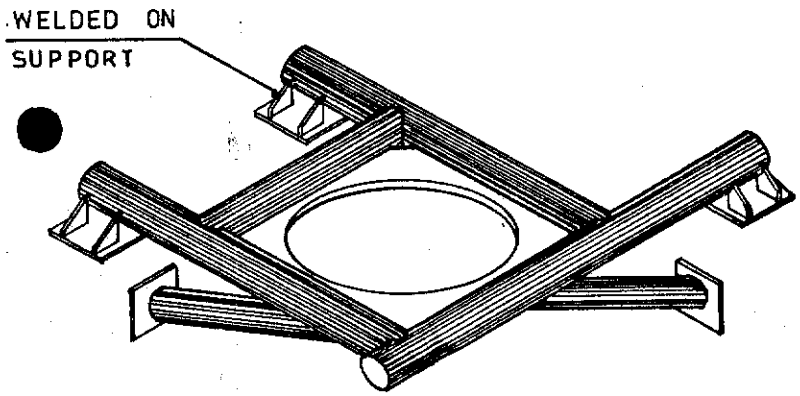

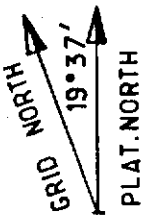

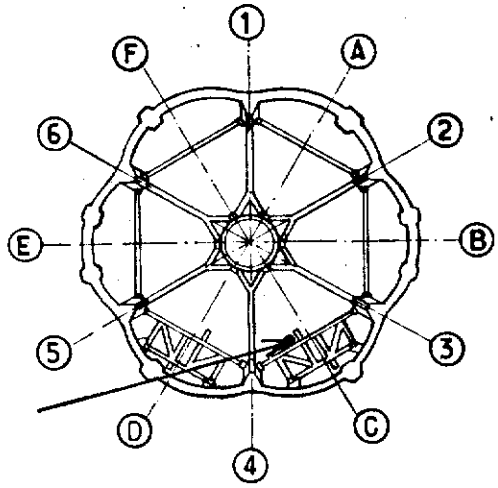

CONDUCTOR GUIDE N°17

KEY PLAN

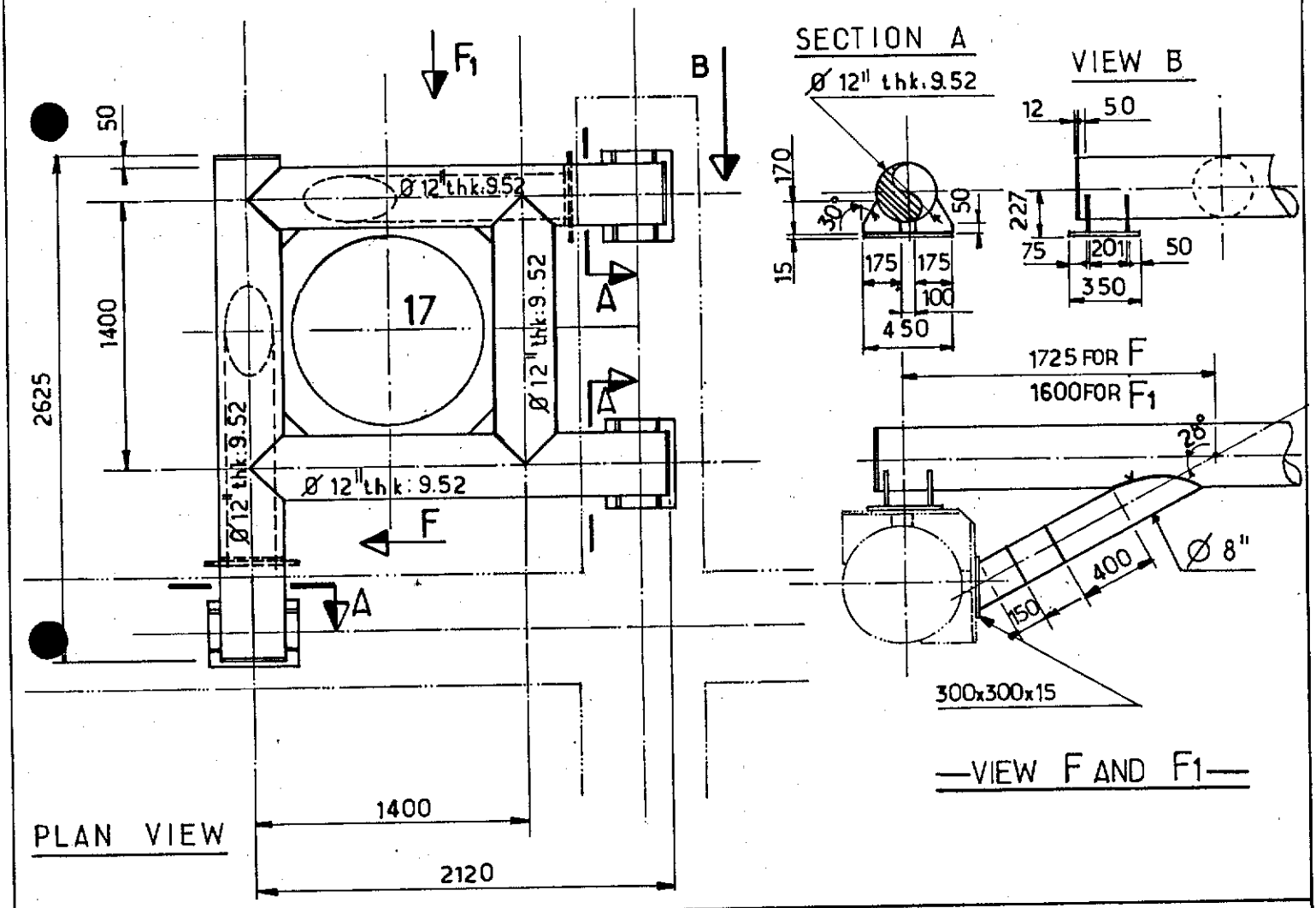

PLAN VIEW

VIEW F AND F1

NOTES

FOR LOCATION SEE SK FF.91.36.35.1422
FOR CONDUCTOR SLEEVE SEE SK FF 91.36.35.1491

Rev.	Date	DESCRIPTION	by	app.
1	12.83	UP DATED	BVH	J.I.C

Contractor JVD 1029_40_98

elf aquitaine norge a/s
p.o.box 168
4001 Stavanger

elf
FRIGG FIELD

Job no.	Installation	System
	CDP 1	UNDERWATER
Scale 1:33	CONDUCTOR GUIDE N°17 CELL C SECONDARY FRAME LEVEL D	
Dwgr. no. FF 91_36_35_1428	Rev 1	Sheet /

Form 100 318

CDP 1 AS BUILT DRAWINGS

REFERENCE DRAWING LIST FOR:

ORIGINATOR	CONSTRUCTION DRAWING REF.	TITLE	Rev	Sheet	Siz
C.G. DORIS	AI. MP. QF. 1070	SECONDARY FRAME FOR	1		A1
		RULING OF THE CONDUCTOR			
		SELEEVE ZONE C.			

ELF DRAWING NUMBER	REVISION		TITLE
	Index	Date	

Rev.	Date	DESCRIPTION	by	app.

Contractor

elf aquitaine norge a/s
p.o.box 168
4001 Stavanger

elf

FRIGG FIELD

Job no.	Installation	System
	CDP 1	UNDERWATER
Scale		
Dwgr. no. FF 1428		

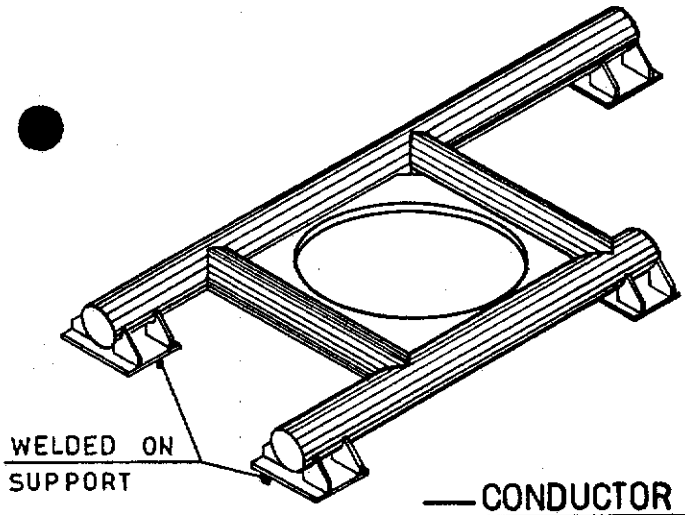

CONDUCTOR GUIDE N°18

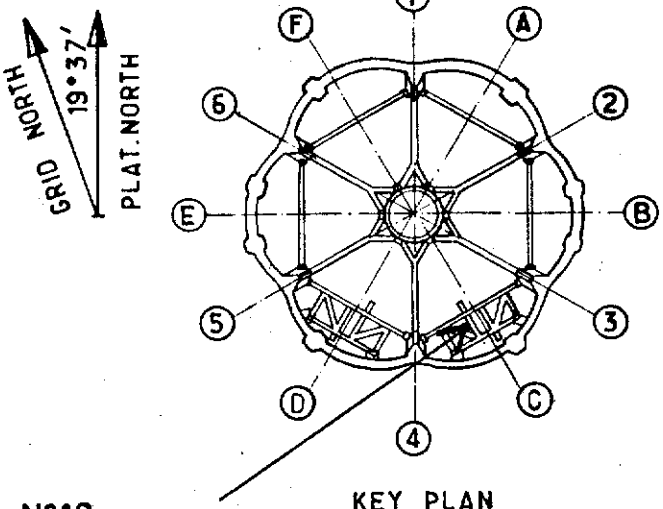

KEY PLAN

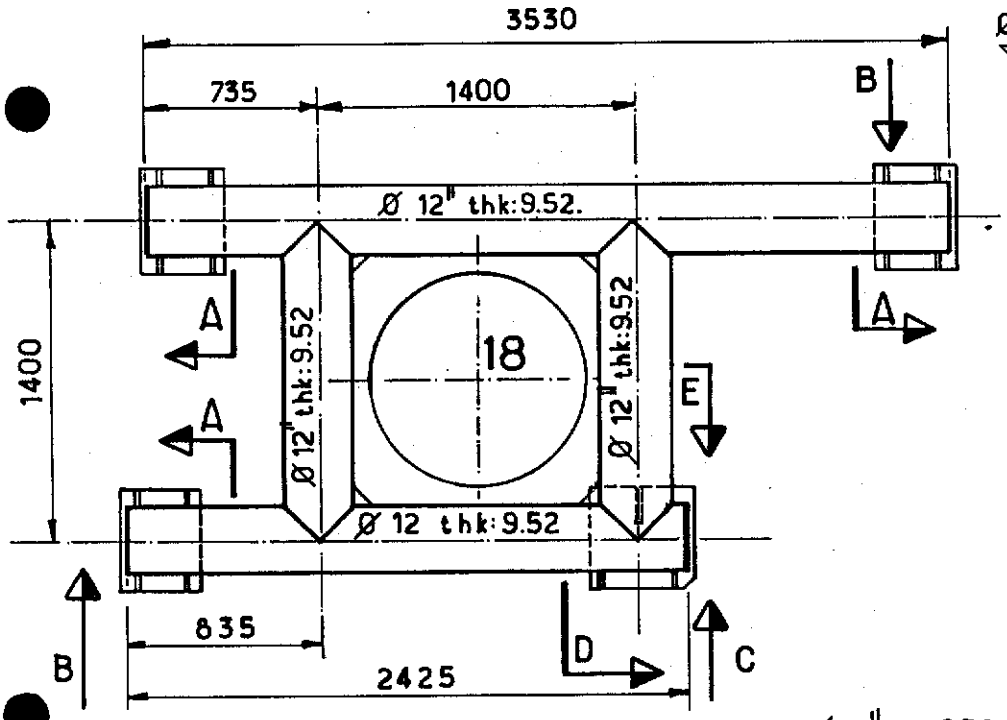

PLAN VIEW

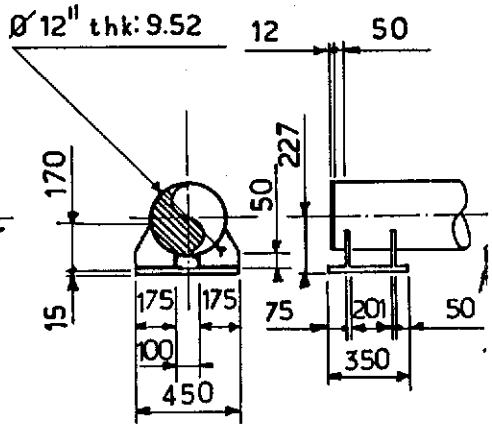

SECTION A VIEW B

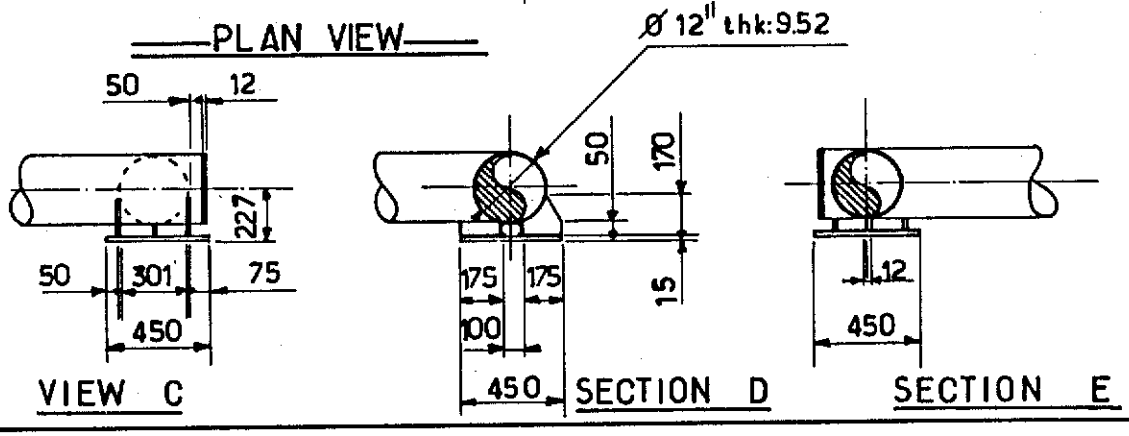

VIEW C SECTION D SECTION E

NOTES

FOR LOCATION SEE SK FF 91.36.35.1422
FOR CONDUCTOR SLEEVE SEE SK FF 91.36.35.1491

Rev.	Date	DESCRIPTION	by	app.
1	12.83	UP DATED	BVH	JLC

Contractor JVD 1029.40.99.

elf aquitaine norge a/s
p.o.box 168
4001 Stavanger

elf
FRIGG FIELD

Job no.	Installation	System
	CDP 1	UNDERWATER
Scale 1:33	CONDUCTOR GUIDE N°18 CELL C SECONDARY FRAME LEVEL D	
Dwgr. no. FF 91.36.35.1429	Rev. 1	Sheet /

Form 100.318

CDP 1 AS BUILT DRAWINGS

REFERENCE DRAWING LIST FOR:

ORIGINATOR	CONSTRUCTION DRAWING REF.	TITLE	Rev	Sheet	Size
C.G. DORIS	A1. MP. QF. 1074	SECONDARY FRAME FOR	1		A1
		RULING OF THE CONDUCTOR			
		SELEEVE ZONE C.			

ELF DRAWING NUMBER	REVISION Index	REVISION Date	TITLE

Rev.	Date	DESCRIPTION	by	app.

Contractor

elf aquitaine norge a/s
p.o.box 168
4001 Stavanger

elf
FRIGG FIELD

Job no.	Installation	System
	CDP 1	UNDERWATER
Scale		
Dwgr. no. FF 1429	Rev.	Sheet /

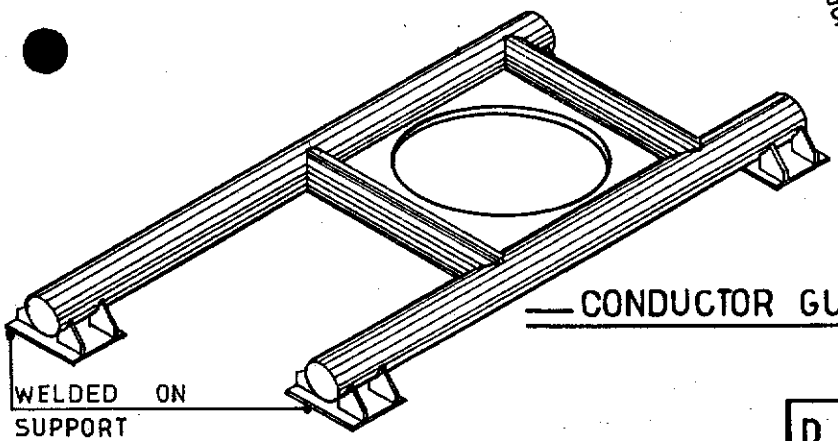

CONDUCTOR GUIDE N°19

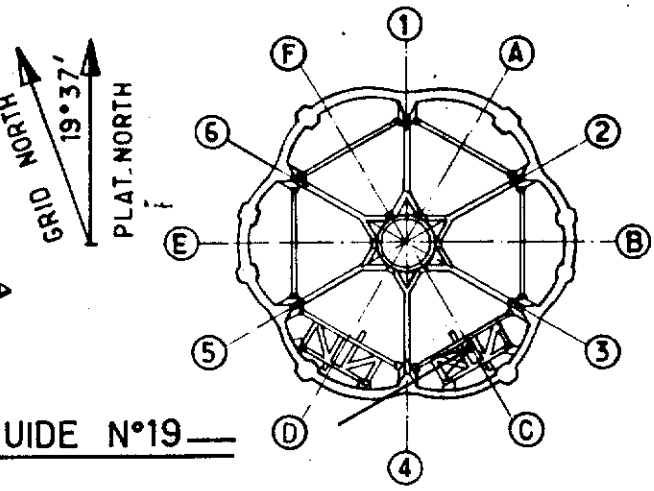

KEY PLAN

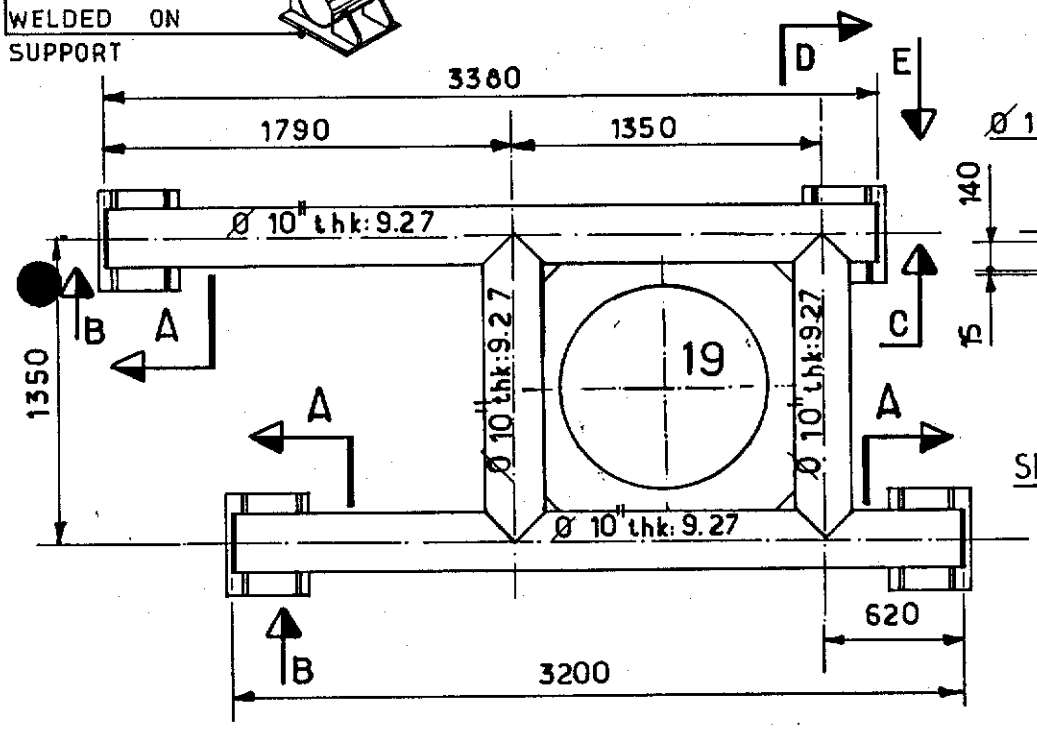

PLAN VIEW

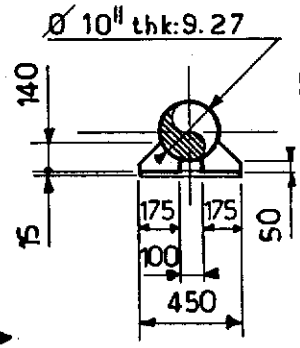

SECTION A

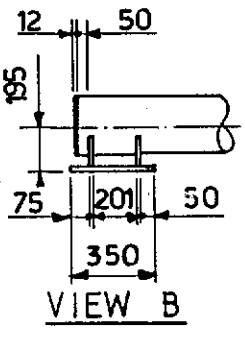

VIEW B

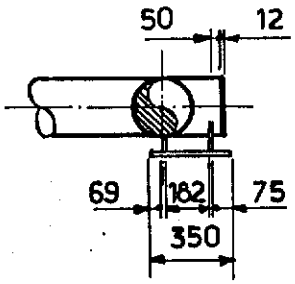

SECTION C

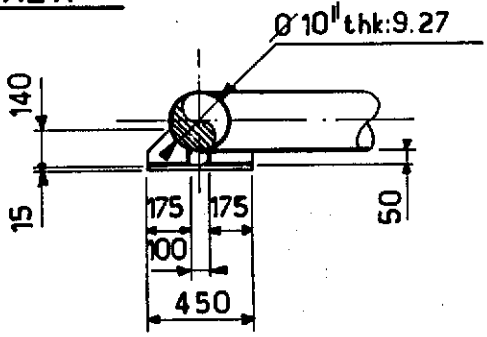

SECTION D

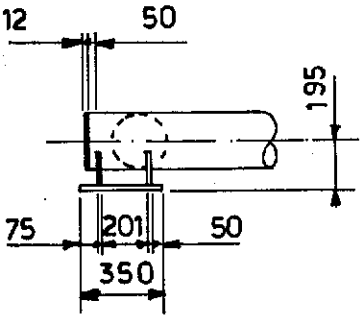

VIEW E

NOTES

FOR LOCATION SEE SK FF 91_36_35_1422

FOR CONDUCTOR SLEEVE SEE SK FF_91_36_35_1491.

Rev.	Date	DESCRIPTION	by	app.
1	12.83	UP DATED	B.VH	L.L.C.

Contractor JVD 1029_40_100_

elf aquitaine norge a/s
p.o.box 168
4001 Stavanger

elf
FRIGG FIELD

Job no.	Installation	System
	CDP 1	UNDERWATER
Scale 1:33	CONDUCTOR GUIDE N°19 CELL C SECONDARY FRAME LEVEL D	
Dwgr. no. FF 91_36_35_1430_	Rev. 1	Sheet /

Form 100.318

CDP 1 AS BUILT DRAWINGS

REFERENCE DRAWING LIST FOR:

ORIGINATOR	CONSTRUCTION DRAWING REF.	TITLE	Rev	Sheet	Siz
C.G. DORIS	AI. MP. QF. 1075	SECONDARY FRAME FOR	2		A1.
		RULING OF THE CONDUCTOR			
		SELEEVE ZONE C.			

ELF DRAWING NUMBER	REVISION Index	REVISION Date	TITLE

Rev.	Date	DESCRIPTION	by	app.

Contractor

elf aquitaine norge a/s
p.o.box 168
4001 Stavanger

elf
FRIGG FIELD

Job no.	Installation	System
	CDP 1	UNDERWATER
Scale		
Dwgr. no. FF 1430		

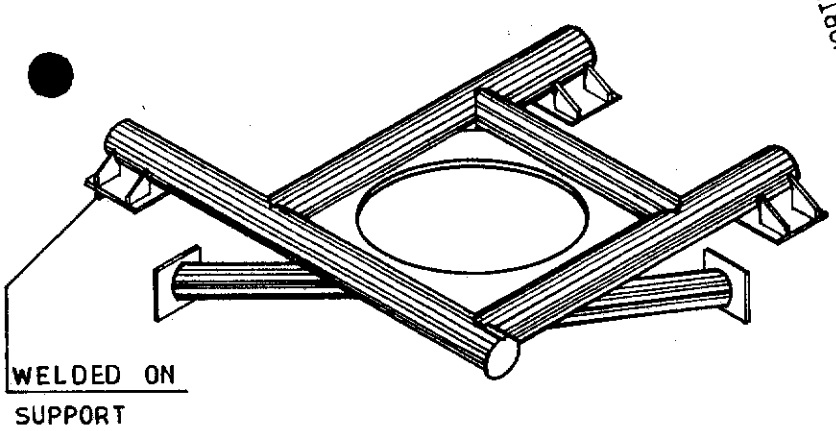

CONDUCTOR GUIDE N°20

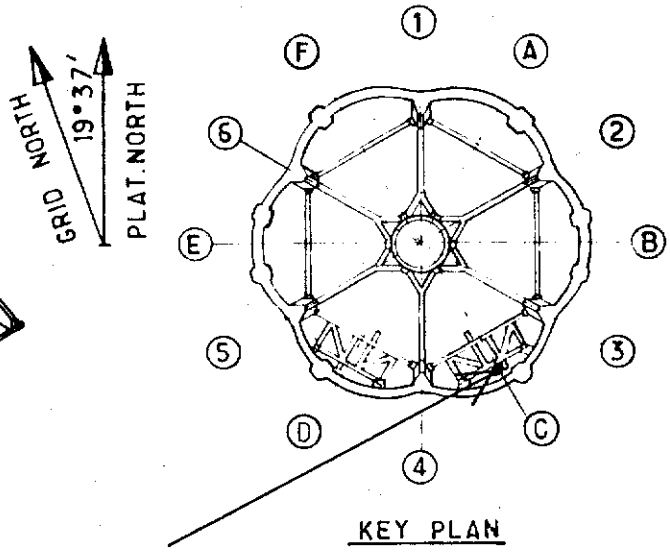

KEY PLAN

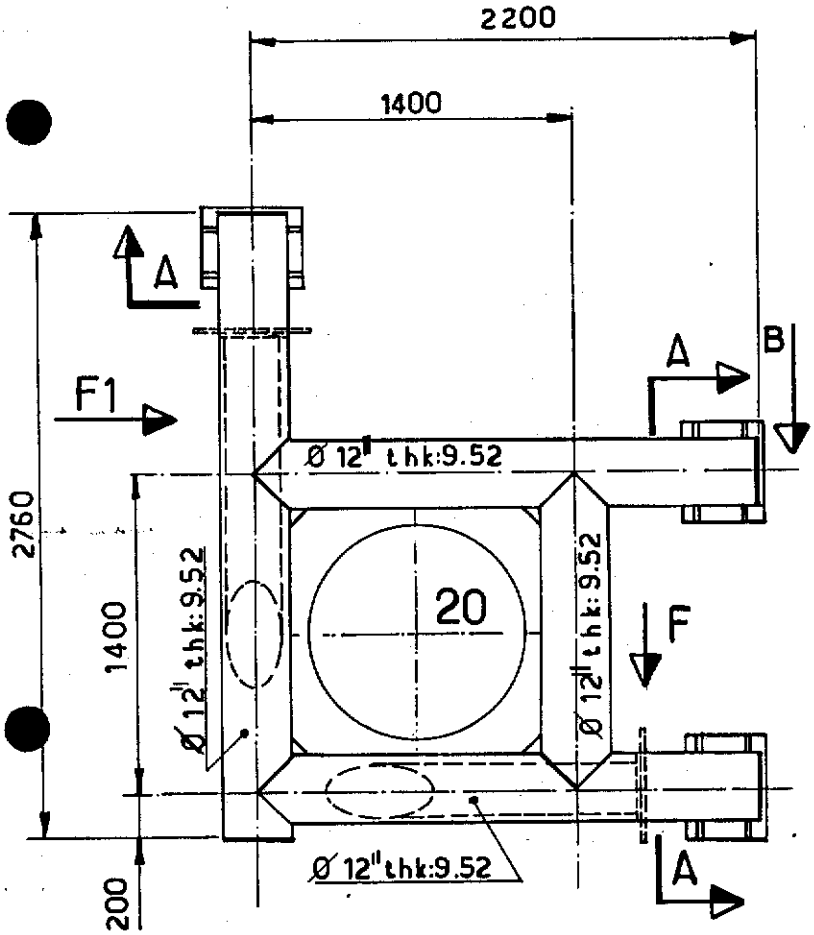

PLAN VIEW

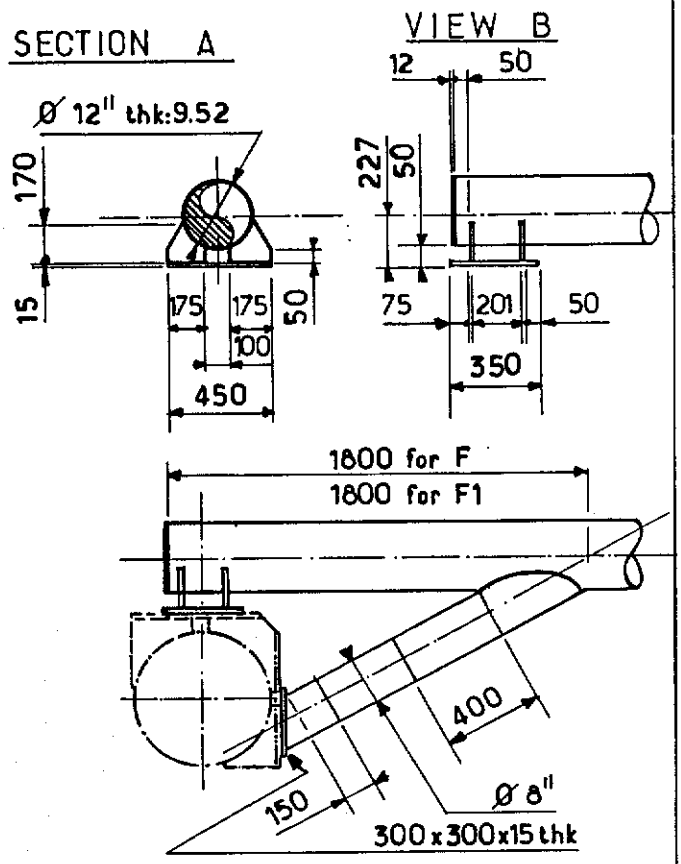

VIEW F AND F1

NOTES

FOR LOCATION SEE SK FF 91-36-35-1422
FOR CONDUCTOR SLEEVE SEE SK FF-91-36-35-1491.

Rev.	Date	DESCRIPTION	by	app.
1	12.83	UP DATED	B.V.H	J.L.C

Contractor JVD 1029-40-101-

elf aquitaine norge a/s
p.o.box 168
4001 Stavanger

elf
FRIGG FIELD

Job no.	Installation	System
	CDP 1	UNDERWATER
Scale 1:33	CONDUCTOR GUIDE N° 20 CELL C SECONDARY FRAME LEVEL D	
Dwgr. no. FF 91-36-35-1431	Rev 1	Sheet /

Form 100 318

CDP 1 AS BUILT DRAWINGS

REFERENCE DRAWING LIST FOR:

ORIGINATOR	CONSTRUCTION DRAWING REF.	TITLE	Rev	Sheet	Siz
C.G. DORIS	AI. MP. QF. 1077	SECONDARY FRAME FOR	1		A1.
		RULING OF THE CONDUCTOR			
		SELEEVE ZONE C.			

ELF DRAWING NUMBER	REVISION Index	REVISION Date	TITLE

Rev.	Date	DESCRIPTION	by	app.

Contractor

elf aquitaine norge a/s
p.o.box 168
4001 Stavanger

elf
FRIGG FIELD

Job no.	Installation	System
	CDP 1	UNDERWATER
Scale		
Dwgr. no. FF 1431		

CONDUCTOR GUIDE N°21

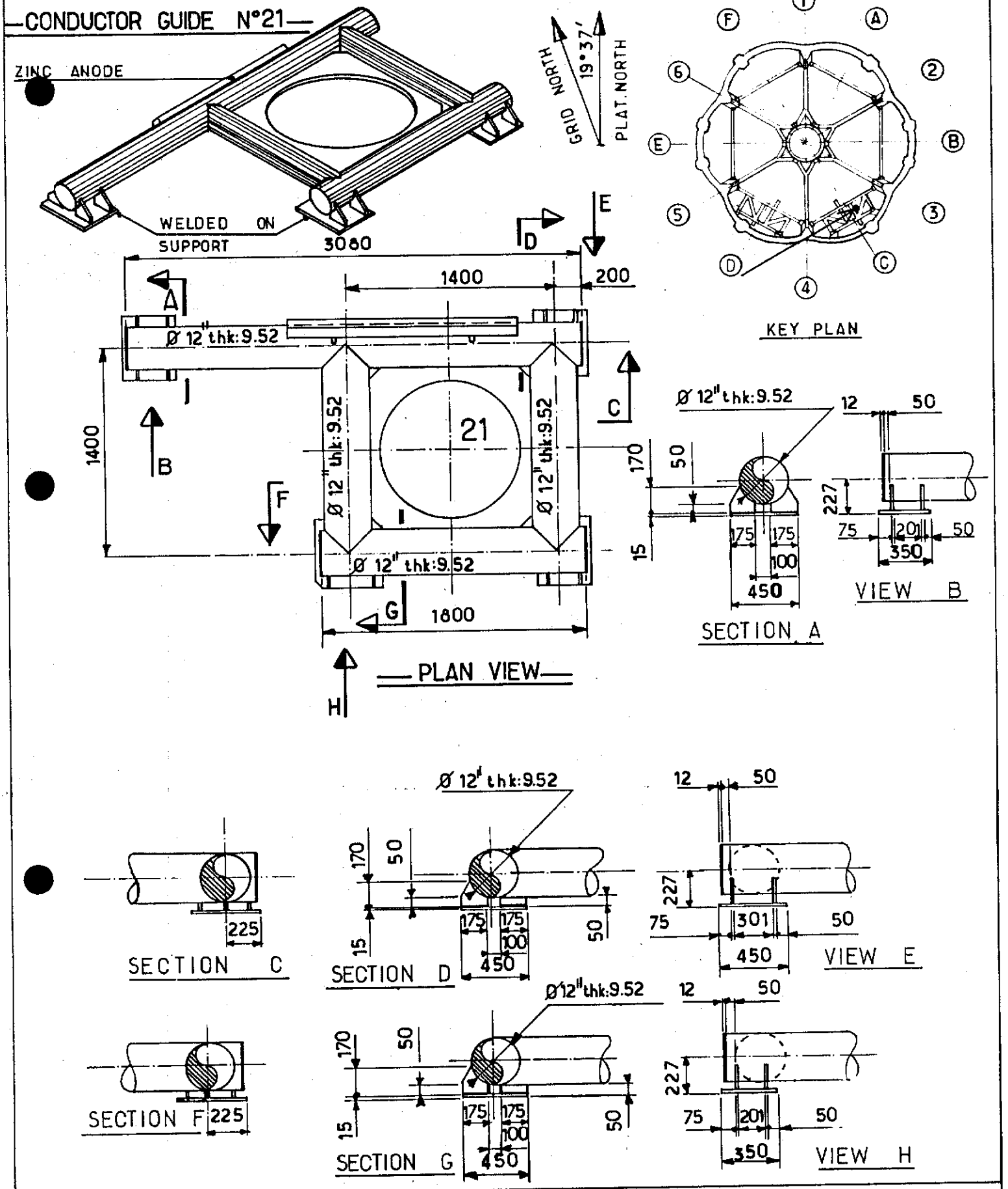

NOTES FOR LOCATION SEE SK FF.91.36.35.1422
FOR CONDUCTOR SLEEVE SEE SK FF 91.36.35.1491.
FOR ZINC ANODE SEE SK FF 91-36-35-1587

Rev.	Date	DESCRIPTION	by	app.
1	12.83	UP DATED	B.V.H	J.L.C

Contractor JVD 1029_40_102_

elf aquitaine norge a/s
p.o.box 168
4001 Stavanger

elf
FRIGG FIELD

Job no.	Installation CDP 1	System UNDERWATER
Scale 1:33	CONDUCTOR GUIDE N°21 CELL C SECONDARY FRAME LEVEL D	
Dwgr. no. FF 91_36_35_1432	Rev. 1	Sheet

CDP 1 AS BUILT DRAWINGS

REFERENCE DRAWING LIST FOR:

ORIGINATOR	CONSTRUCTION DRAWING REF.	TITLE	Rev	Sheet	Siz
C.G. DORIS	A1. MP. QF. 1079	SECONDARY FRAME FOR	1		A1.
		RULING OF THE CONDUCTOR			
		SELEEVE ZONE C.			

ELF DRAWING NUMBER	REVISION Index	REVISION Date	TITLE

Rev.	Date	DESCRIPTION	by	app.

Contractor

elf aquitaine norge a/s
p.o.box 168
4001 Stavanger

elf
FRIGG FIELD

Job no.	Installation	System
	CDP 1	UNDERWATER
Scale		
Dwgr. no. FF 1432		

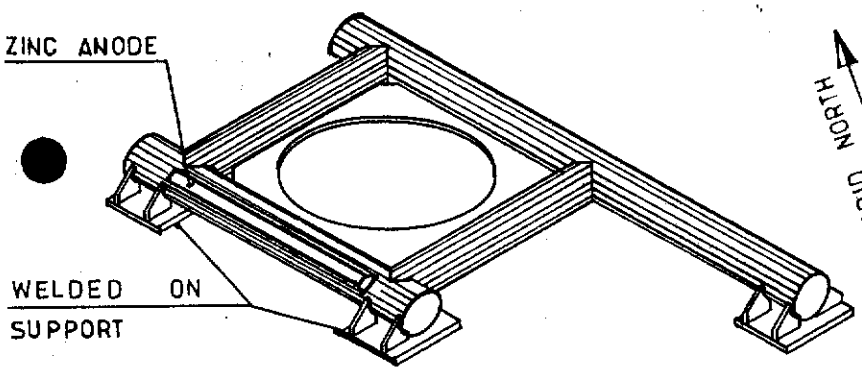

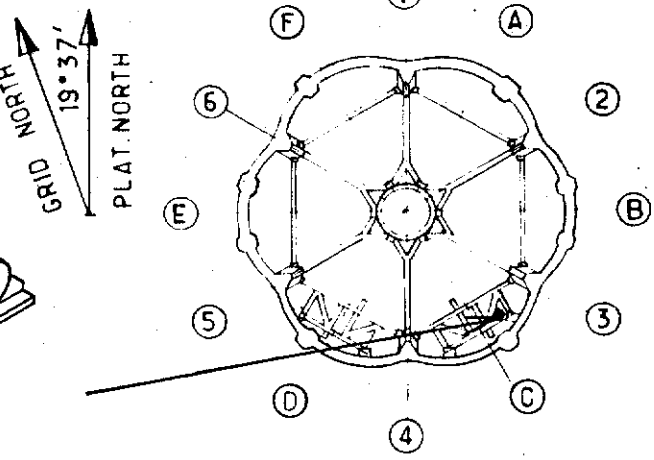

KEY PLAN

CONDUCTOR GUIDE N°22

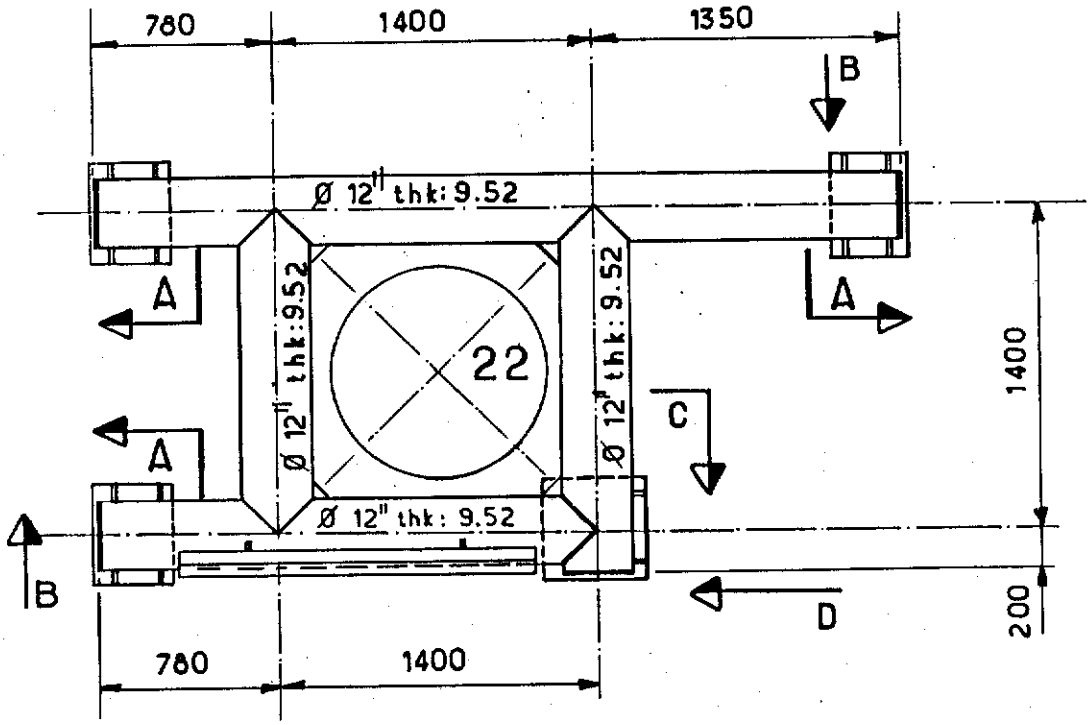

PLAN VIEW

SECTION A

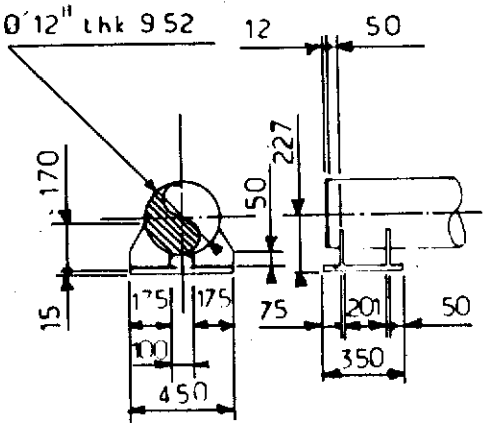

VIEW B

SECTION C

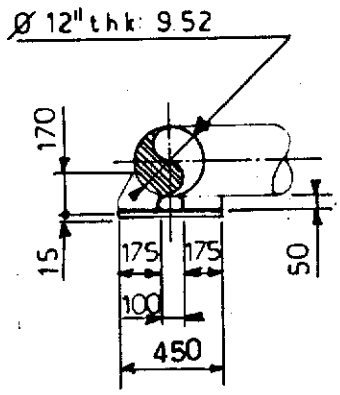

VIEW D

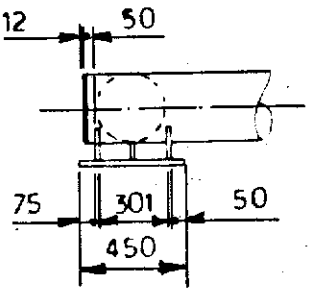

NOTES

FOR LOCATION SEE SK FF 91-36-35-1422-
FOR CONDUCTOR SLEEVE SEE SK FF_91_36_35_1491.

FOR ZINC ANODE SEE SK FF 91-36-35-1587

Rev.	Date	DESCRIPTION	by	app.
1	12.83	UP DATED	BVH	J.C.

Contractor JVD 1029_40_103_

elf aquitaine norge a/s
p.o.box 168
4001 Stavanger

elf
FRIGG FIELD

Job no.	Installation	System
	CDP 1	UNDERWATER
Scale 1:33	CONDUCTOR GUIDE N°22 CELL C SECONDARY FRAME LEVEL D	
Dwgr. no. FF 91_36_35_1433_	Rev. 1	Sheet

CDP 1 AS BUILT DRAWINGS

REFERENCE DRAWING LIST FOR:

ORIGINATOR	CONSTRUCTION DRAWING REF.	TITLE	Rev	Sheet	Siz
C.G. DORIS	A1. MP. QF. 1080	SECONDARY FRAME FOR	1		A1.
		RULING OF THE CONDUCTOR			
		SELEEVE ZONE C.			

ELF DRAWING NUMBER	REVISION		TITLE
	Index	Date	

Rev.	Date	DESCRIPTION	by	app.

Contractor

elf aquitaine norge a/s
p.o.box 168
4001 Stavanger

elf

FRIGG FIELD

Job no.	Installation	System
	CDP 1	UNDERWATER
Scale		
Dwgr. no. FF 1433	Rev.	Sheet /

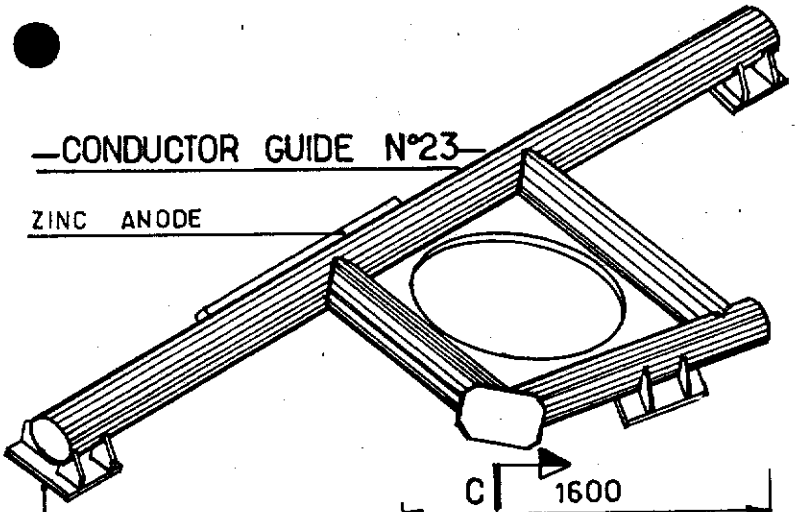

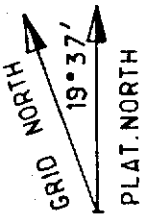

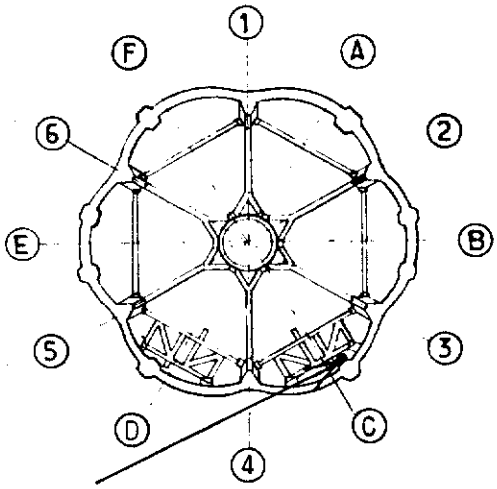

KEY PLAN

NOTES
FOR LOCATION SEE SK FF.91.36.35.1422.
FOR CONDUCTOR SLEEVE SEE SK FF.91.3635.1491
FOR ZINC ANODE SEE SK FF.91_36.35.1587

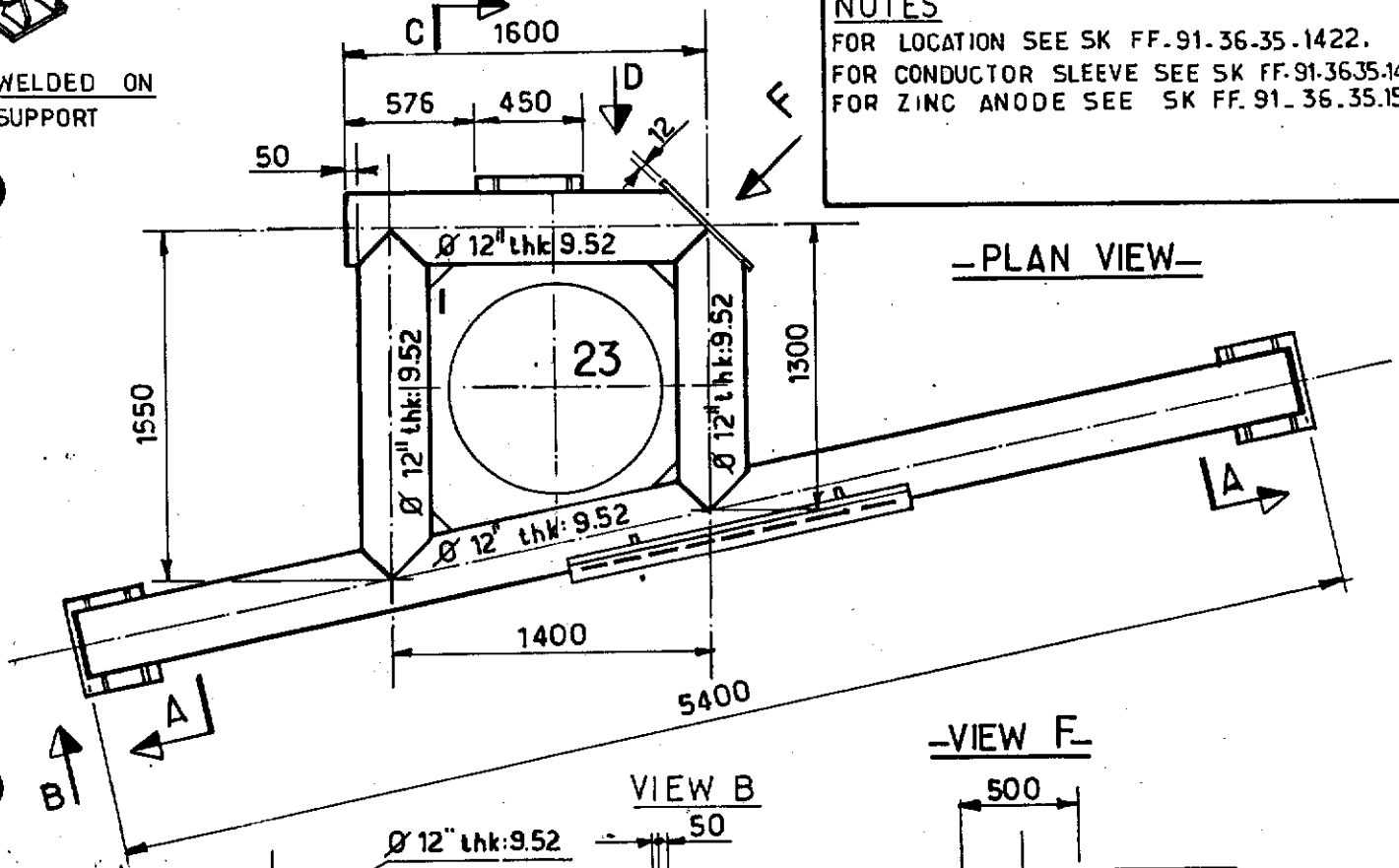

PLAN VIEW

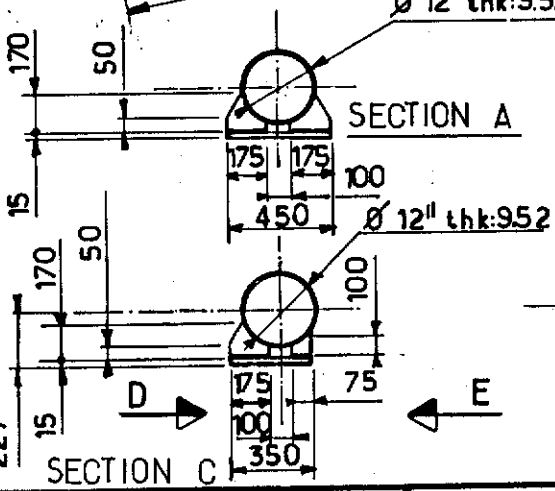

SECTION A

SECTION C

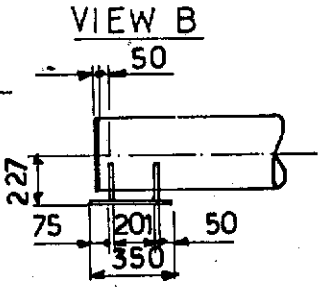

VIEW B

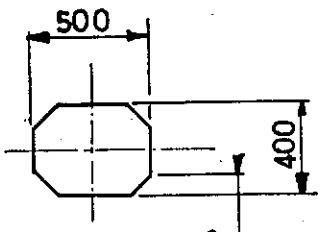

VIEW F

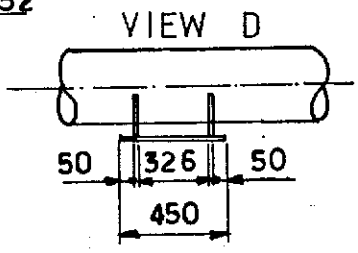

VIEW D

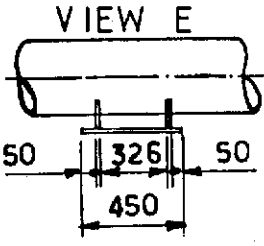

VIEW E

Rev.	Date	DESCRIPTION	by	app.
1	1283	UP DATED	B.V.H	HC

Contractor JVD 1029_40_104_

elf aquitaine norge a/s
p.o.box 168
4001 Stavanger

elf
FRIGG FIELD

Job no.	Installation	System
	CDP 1	UNDERWATER
Scale 1:33	CONDUCTOR GUIDE N°23 CELL C SECONDARY FRAME LEVEL D	
Dwgr. no. FF 91_36_35.1434_	Rev 1	Sheet /

Form 1001 1/8...

CDP 1 AS BUILT DRAWINGS

REFERENCE DRAWING LIST FOR:

ORIGINATOR	CONSTRUCTION DRAWING REF.	TITLE	Rev	Sheet	Size
C.G. DORIS	A1. MP. QF. 1081	SECONDARY FRAME FOR	2		A1.
		RULING OF THE CONDUCTOR			
		SELEEVE ZONE C.			

ELF DRAWING NUMBER	REVISION Index	REVISION Date	TITLE

Rev.	Date	DESCRIPTION	by	app.

Contractor

elf aquitaine norge a/s
p.o.box 168
4001 Stavanger

elf
FRIGG FIELD

Job no.	Installation	System
	CDP 1	UNDERWATER
Scale		
Dwgr. no. FF 1434	Rev	Sheet /

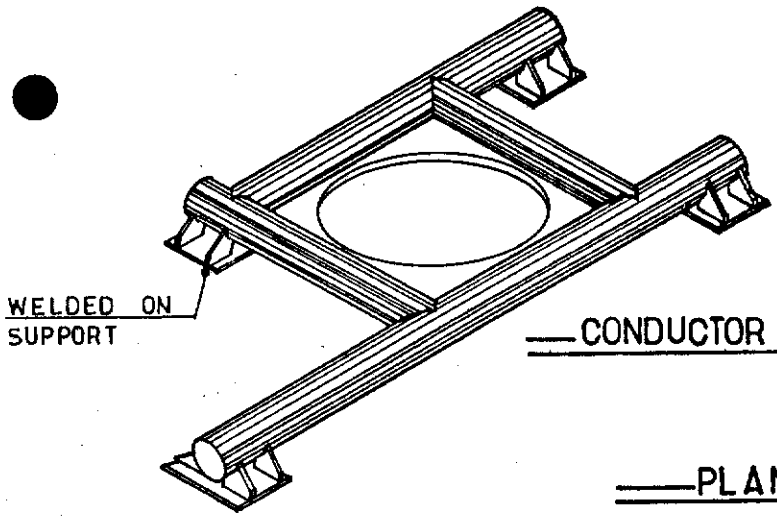

CONDUCTOR GUIDE N°24

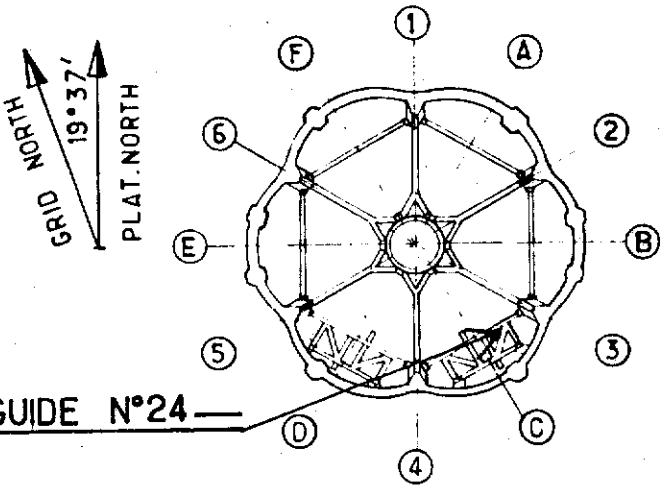

KEY PLAN

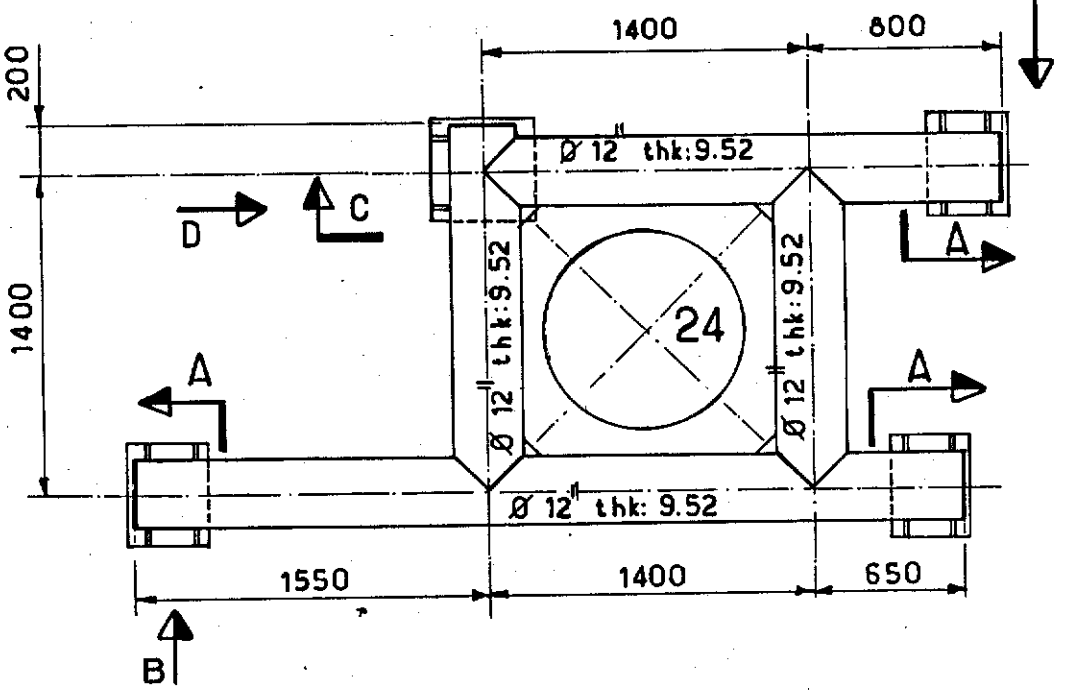

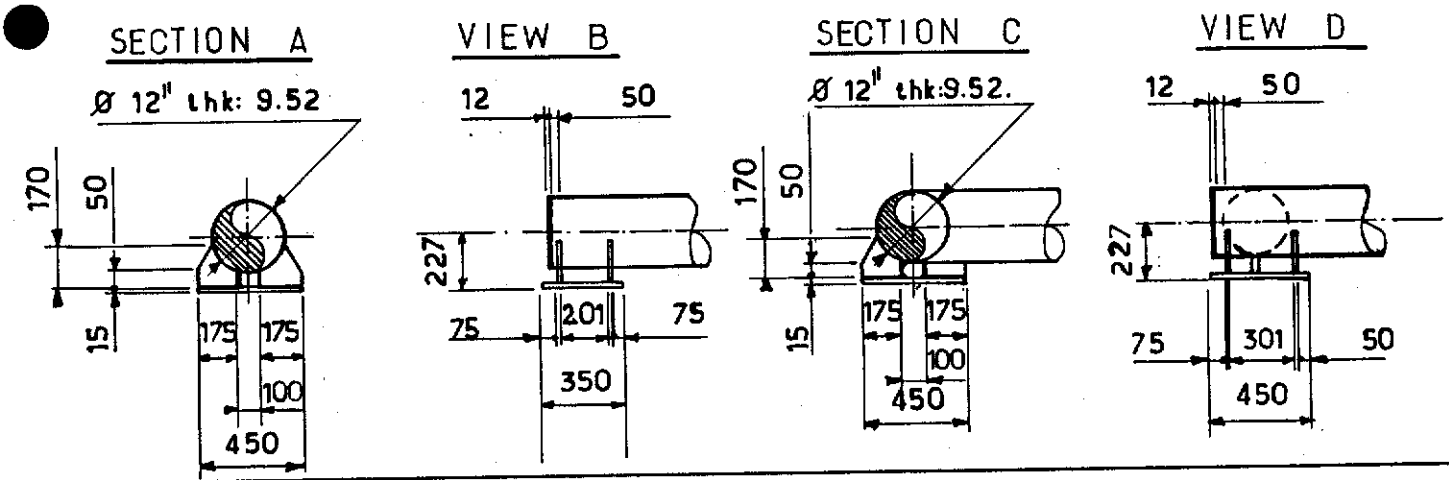

NOTES FOR LOCATION SEE SK FF 91_36_35_1422
FOR CONDUCTOR SLEEVE SEE SK FF_91_36_35_1491.

Rev.	Date	DESCRIPTION	by	app.
1	12.83	UP DATED	BV.H	J.C

Contractor JVD 1029_40_105_

elf aquitaine norge a/s
p.o.box 168
4001 Stavanger

elf
FRIGG FIELD

Job no.	Installation	System
	CDP 1	UNDERWATER
Scale 1:33	CONDUCTOR GUIDE N°24 CELL C SECONDARY FRAME LEVEL D	
Dwgr. no. FF 91_36_35_1435	Rev 1	Sheet

Form 100 318

CDP 1 AS BUILT DRAWINGS

REFERENCE DRAWING LIST FOR:

ORIGINATOR	CONSTRUCTION DRAWING REF.	TITLE	Rev	Sheet	Size
C.G. DORIS	A1. MP. QF. 1078	SECONDARY FRAME FOR	1		A1.
		RULING OF THE CONDUCTOR			
		SELEEVE ZONE C.			

ELF DRAWING NUMBER	REVISION Index	REVISION Date	TITLE

Rev.	Date	DESCRIPTION	by	app.

Contractor

elf aquitaine norge a/s
p.o.box 168
4001 Stavanger

elf
FRIGG FIELD

Job no.	Installation	System
	CDP 1	UNDERWATER
Scale		
Dwgr. no. FF 1435	Rev.	Sheet 1

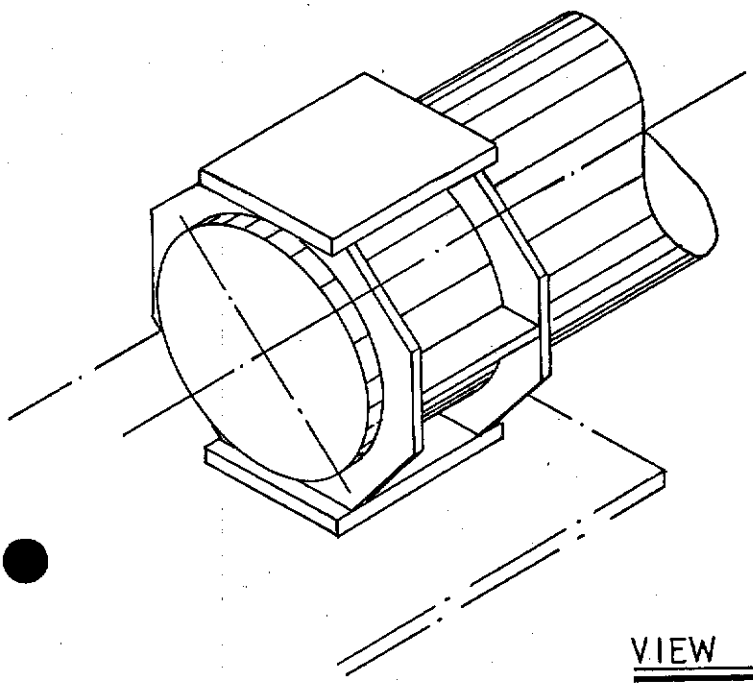

VIEW F

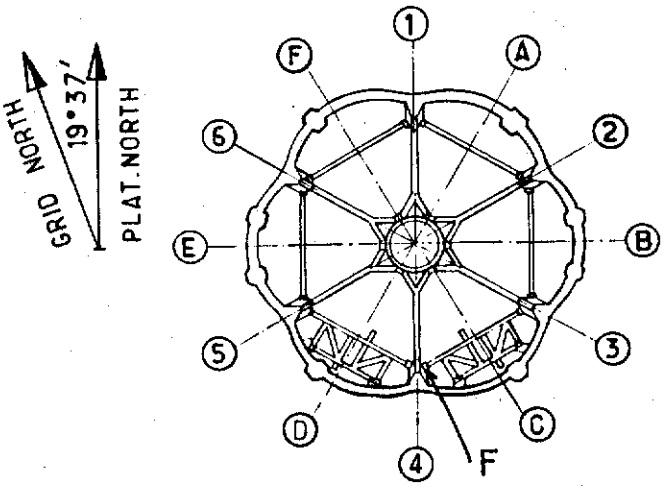

KEY PLAN

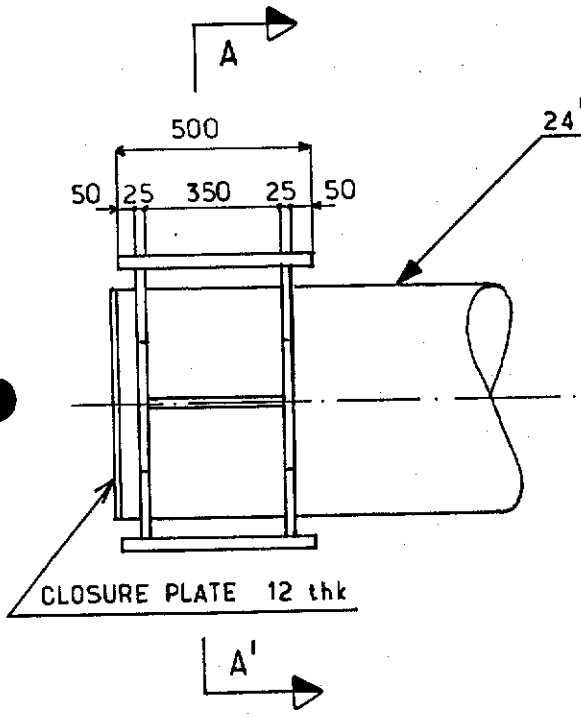

SECTION AA'

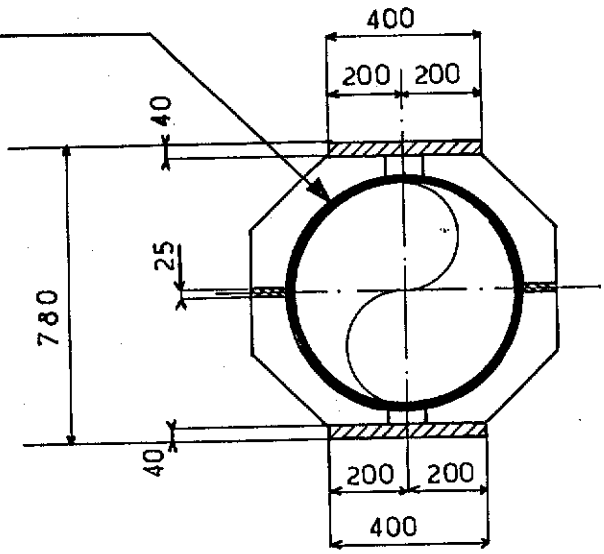

NOTES

FOR LOCATION SEE SK FF_91_36_35_1422
FOR BOX FOR FREE LOCK SEE SK FF_91_36_35_1438

Rev.	Date	DESCRIPTION	by	app.
1	12.83	UP DATED	BVH	LLC

Contractor JVD 1029_40_106_

elf aquitaine norge a/s
p.o.box 168
4001 Stavanger

elf
FRIGG FIELD

Job no.	Installation	System
	CDP 1	UNDERWATER
Scale 1:20	FREE LOCK PIPE END DC1 CELL C LEVEL D	
Dwgr. no. FF 91·36·35·1436	Rev 1	Sheet /

Form 100 318

CDP 1 AS BUILT DRAWINGS

REFERENCE DRAWING LIST FOR:

ORIGINATOR	CONSTRUCTION DRAWING REF.	TITLE	Rev	Sheet	Size
CG DORIS	A1. MP. QF. 1186	PIPE END FOR FREE LOCK	1		A1
		OF GUIDE FRAME Ø 24"			
		LEVEL D CELL C			

ELF DRAWING NUMBER	REVISION Index	REVISION Date	TITLE

Rev.	Date	DESCRIPTION	by	app.

Contractor

elf aquitaine norge a/s
p.o.box 168
4001 Stavanger

elf

FRIGG FIELD

Job no.	Installation	System
	CDP 1	UNDERWATER
Scale		
Dwgr. no. FF 1436	Rev.	Sheet 1

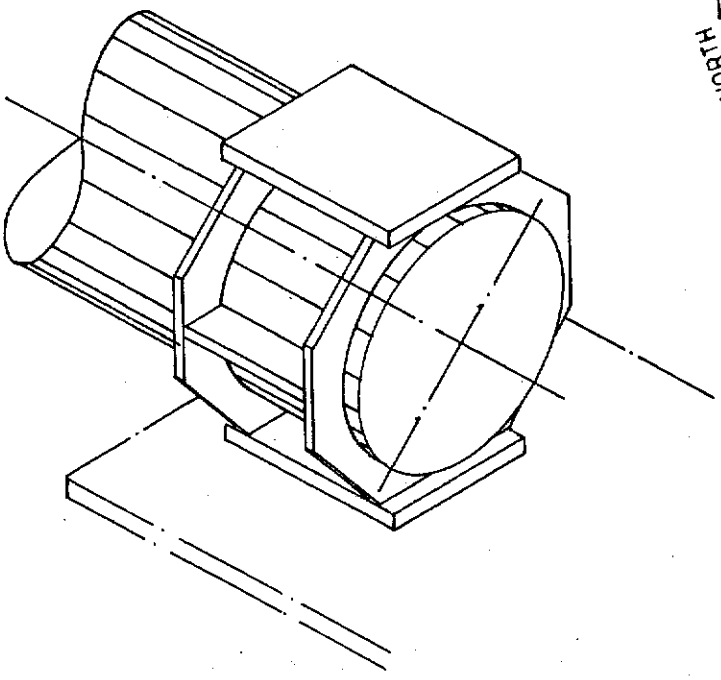

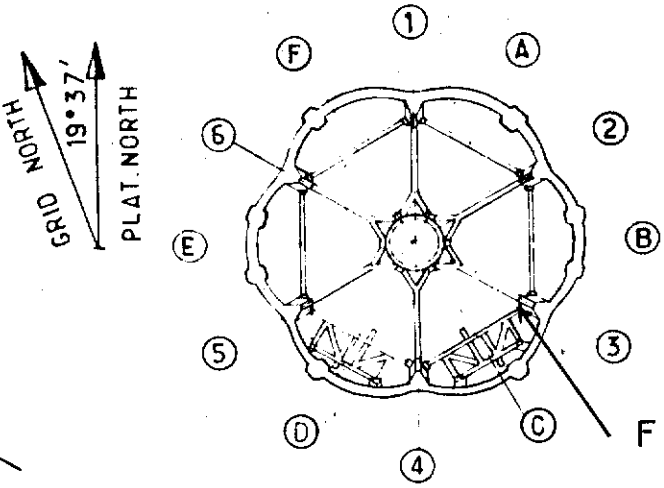

KEY PLAN

VIEW F

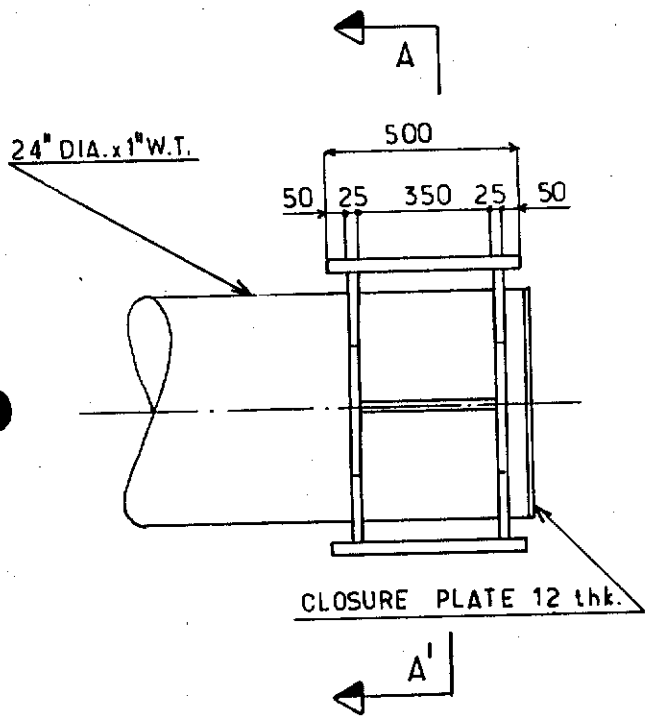

SECTION AA'

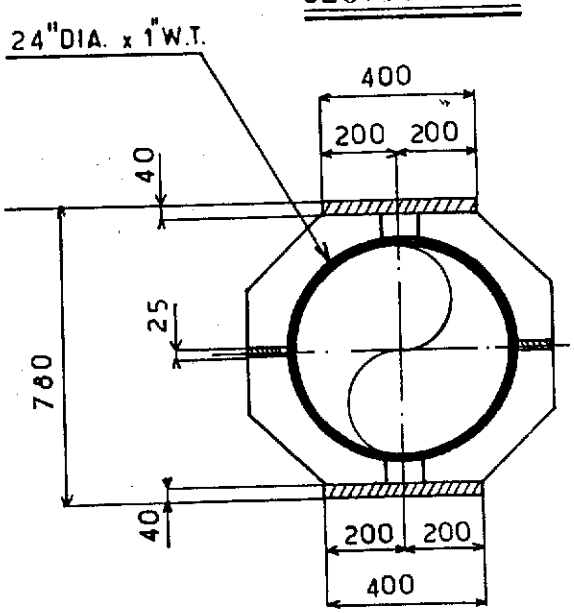

NOTES

FOR LOCATION SEE SK FF_91_36_35_1422
FOR BOX FOR FREE LOCK SEE SK FF_91_36_35_1439

Rev.	Date	DESCRIPTION	by	app.
1	12.83	UP DATED	BVH	J.L.C.

Contractor JVD 1029_40_107.

elf aquitaine norge a/s
p.o.box 168
4001 Stavanger

elf
FRIGG FIELD

Job no.	Installation	System
	CDP 1	UNDERWATER
Scale 1:20	FREE LOCK PIPE END DC4 CELL C LEVEL D	
Dwgr. no. FF 91·36·35·1437	No. 1	Sheet

CDP 1 AS BUILT DRAWINGS

REFERENCE DRAWING LIST FOR:

ORIGINATOR	CONSTRUCTION DRAWING REF.	TITLE	Rev	Sheet	Size
CG DORIS	A1. MP. QF. 1186	PIPE END FOR FREE LOCK OF GUIDE FRAME Ø24" LEVEL D CELL C	1		A1

ELF DRAWING NUMBER	REVISION Index	REVISION Date	TITLE

Rev.	Date	DESCRIPTION	by	app.

Contractor

elf aquitaine norge a/s
p.o.box 168
4001 Stavanger

elf
FRIGG FIELD

Job no.	Installation	System
	CDP 1	UNDERWATER
Scale		
Dwgr. no. FF 1437	Rev.	Sheet /

Form 100 318

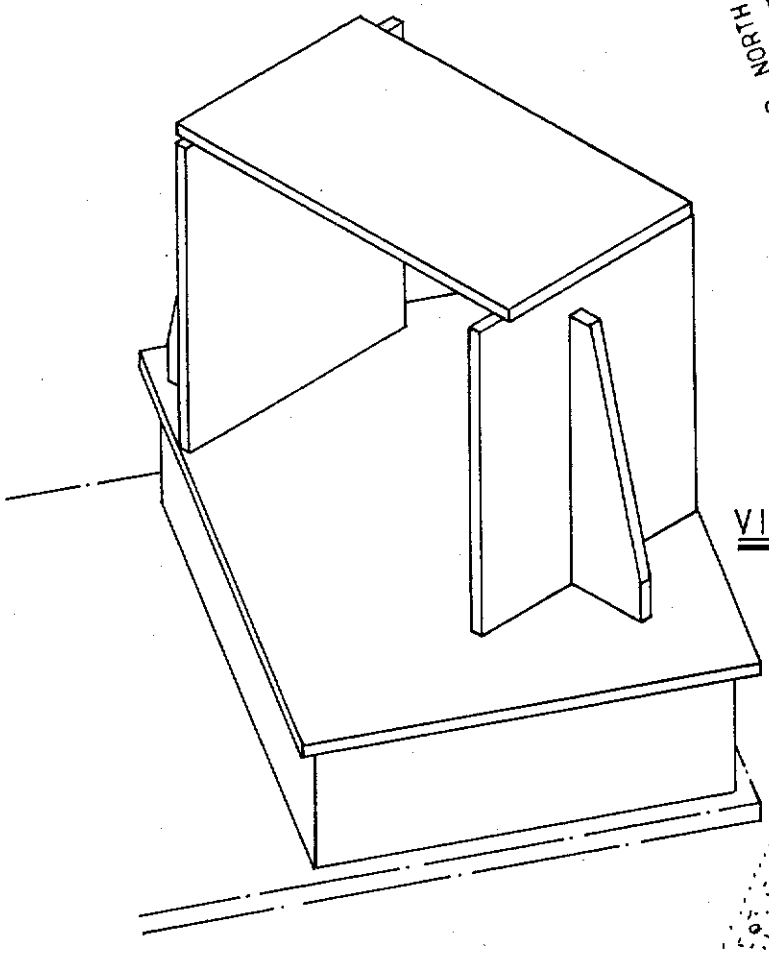

VIEW F

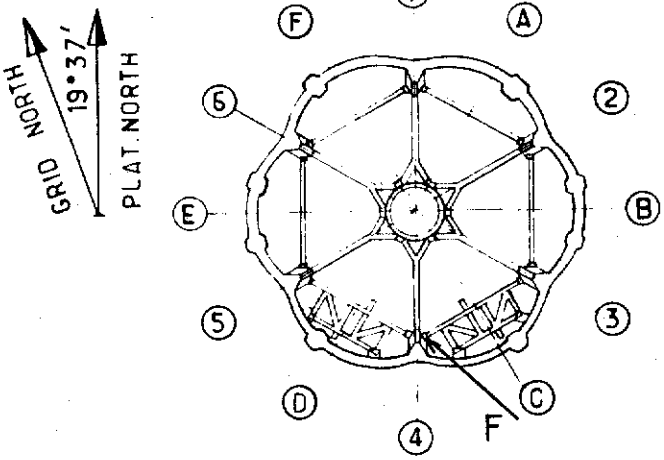

KEY PLAN

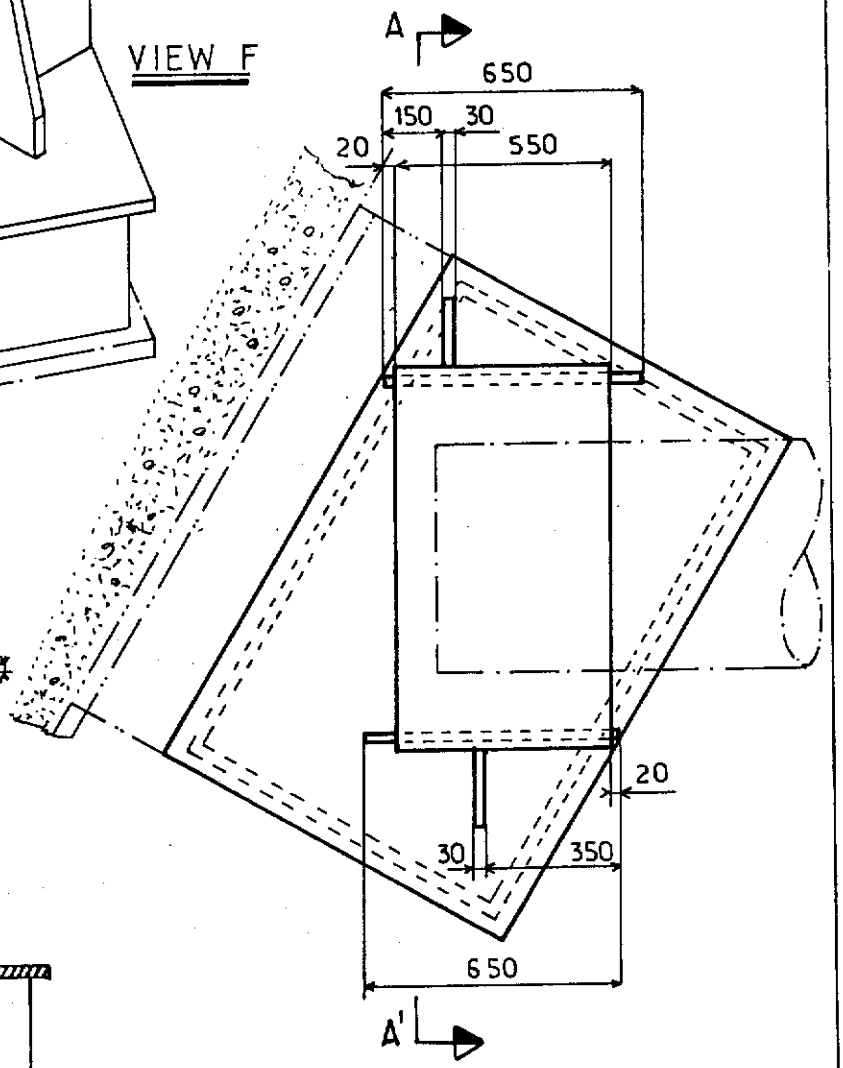

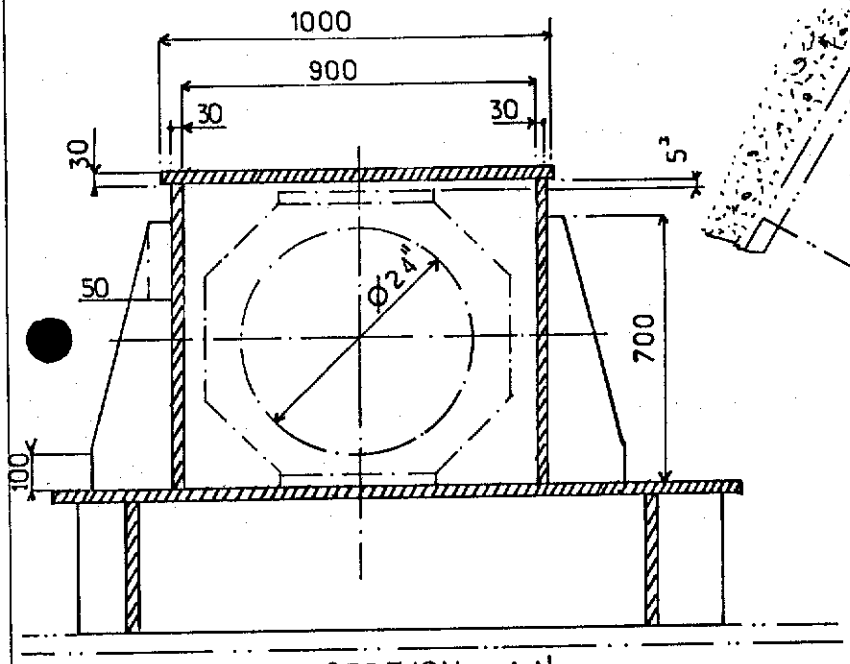

SECTION AA'

NOTES

FOR LOCATION SEE SK FF_91_36_35_1422.

FOR DETAIL OF FREE LOCK PIPE END SEE SK FF_91_36_35_1436.

Rev.	Date	DESCRIPTION	by	app.
1	12.83	UP DATED	BVH	JLC

Contractor JVD 1029_40_108_

elf aquitaine norge a/s
p.o.box 168
4001 Stavanger

elf
FRIGG FIELD

Job no.	Installation	System
	CDP 1	UNDERWATER
Scale 1:20	BOX FOR FREE LOCK DC1 CELL C LEVEL 0	
Dwgr. no. FF 91·36·35·1438-	No. 1	Sheet /

CDP 1 AS BUILT DRAWINGS

REFERENCE DRAWING LIST FOR:

ORIGINATOR	CONSTRUCTION DRAWING REF.	TITLE	Rev	Sheet	Size
- C G. DORIS.	A1. MP. QF. 1239	BOX FOR FREE LOCK.	1		A1
		ZONE C . LEVEL D .			

ELF DRAWING NUMBER	REVISION Index	REVISION Date	TITLE

Rev.	Date	DESCRIPTION	by	app.

Contractor

elf aquitaine norge a/s
p.o.box 168
4001 Stavanger

elf
FRIGG FIELD

Job no.	Installation CDP 1	System UNDERWATER
Scale	BOXE FOR FREE LOCK DC1	
Dwgr. no. FF ___ ___ 1438	Rev.	Sheet /

Form 100 318

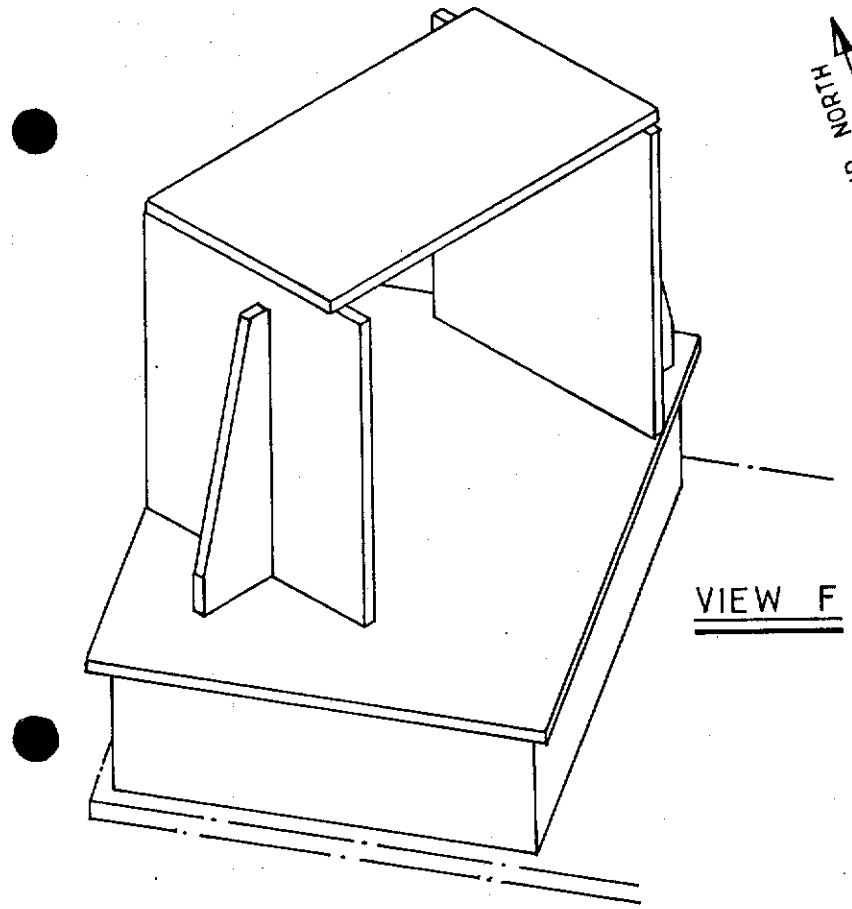

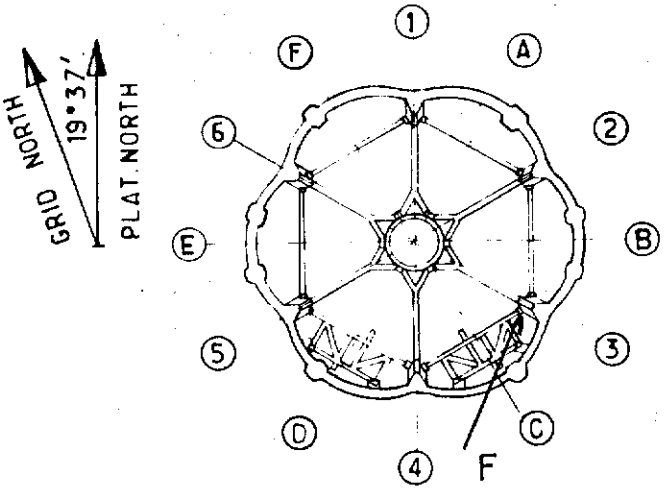

KEY PLAN

VIEW F

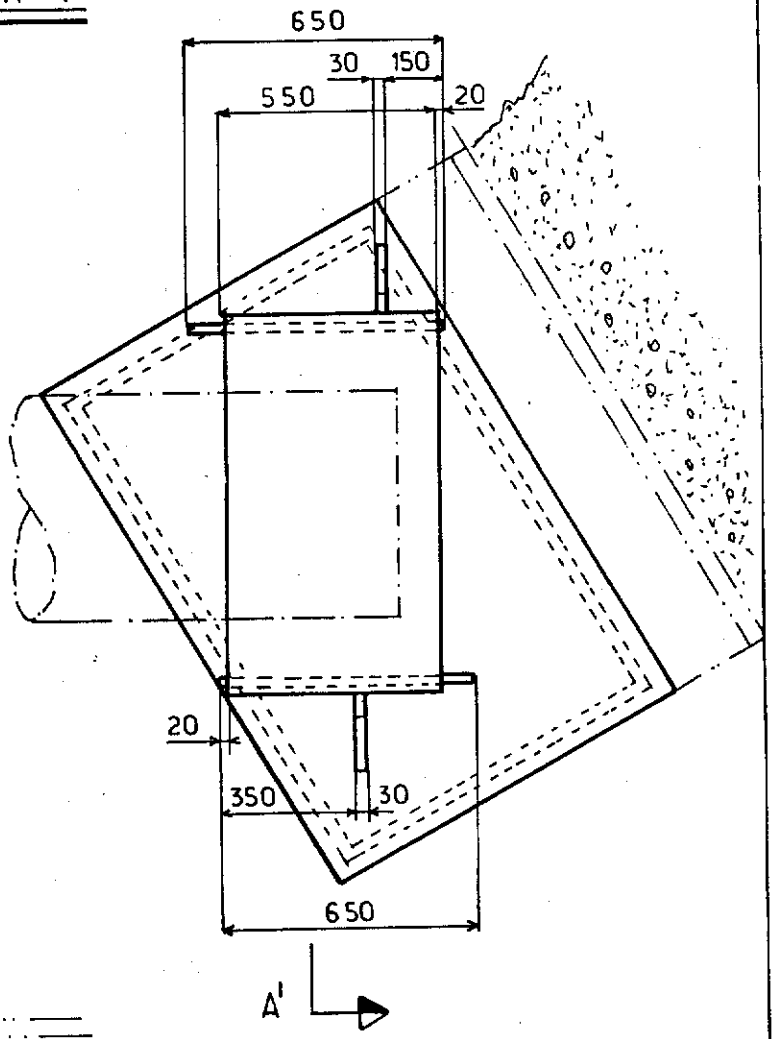

SECTION AA'

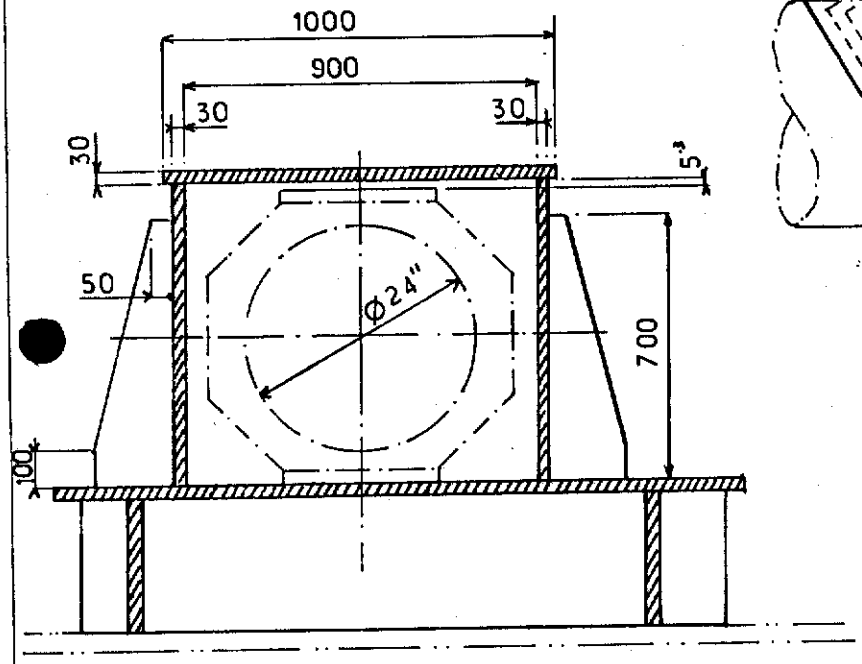

NOTES

FOR LOCATION SEE SK FF_91_36_35_1422.

FOR DETAIL OF FREE LOCK PIPE END SEE SK FF_91_36_35_1437.

Rev.	Date	DESCRIPTION	by	app.
1	12.83	UP DATED	B.V.H	

Contractor JVD 1029_40.109.

elf aquitaine norge a/s
p.o.box 168
4001 Stavanger

elf
FRIGG FIELD

Job no.	Installation	System
	CDP 1	UNDERWATER
Scale 1:20	BOX FOR FREE LOCK DC4 CELL C LEVEL D	
Dwgr. no. FF 91·36·35·1439.	Rev. 1	Sheet

CDP 1 AS BUILT DRAWINGS

REFERENCE DRAWING LIST FOR:

ORIGINATOR	CONSTRUCTION DRAWING REF.	TITLE	Rev	Sheet	Size
- C G. DORIS.	A1. MP. QF. 1239.	BOX FOR FREE LOCK.	1		A1
		ZONE C. LEVEL D.			

ELF DRAWING NUMBER	REVISION Index	REVISION Date	TITLE

Rev.	Date	DESCRIPTION	by	app.

Contractor

elf aquitaine norge a/s
p.o.box 168
4001 Stavanger

elf
FRIGG FIELD

Job no.	Installation CDP 1	System UNDERWATER
Scale	BOXE FOR FREE LOCK DC4	
Dwgr. no. FF 1439	Rev.	Sheet /

Form 10U 318

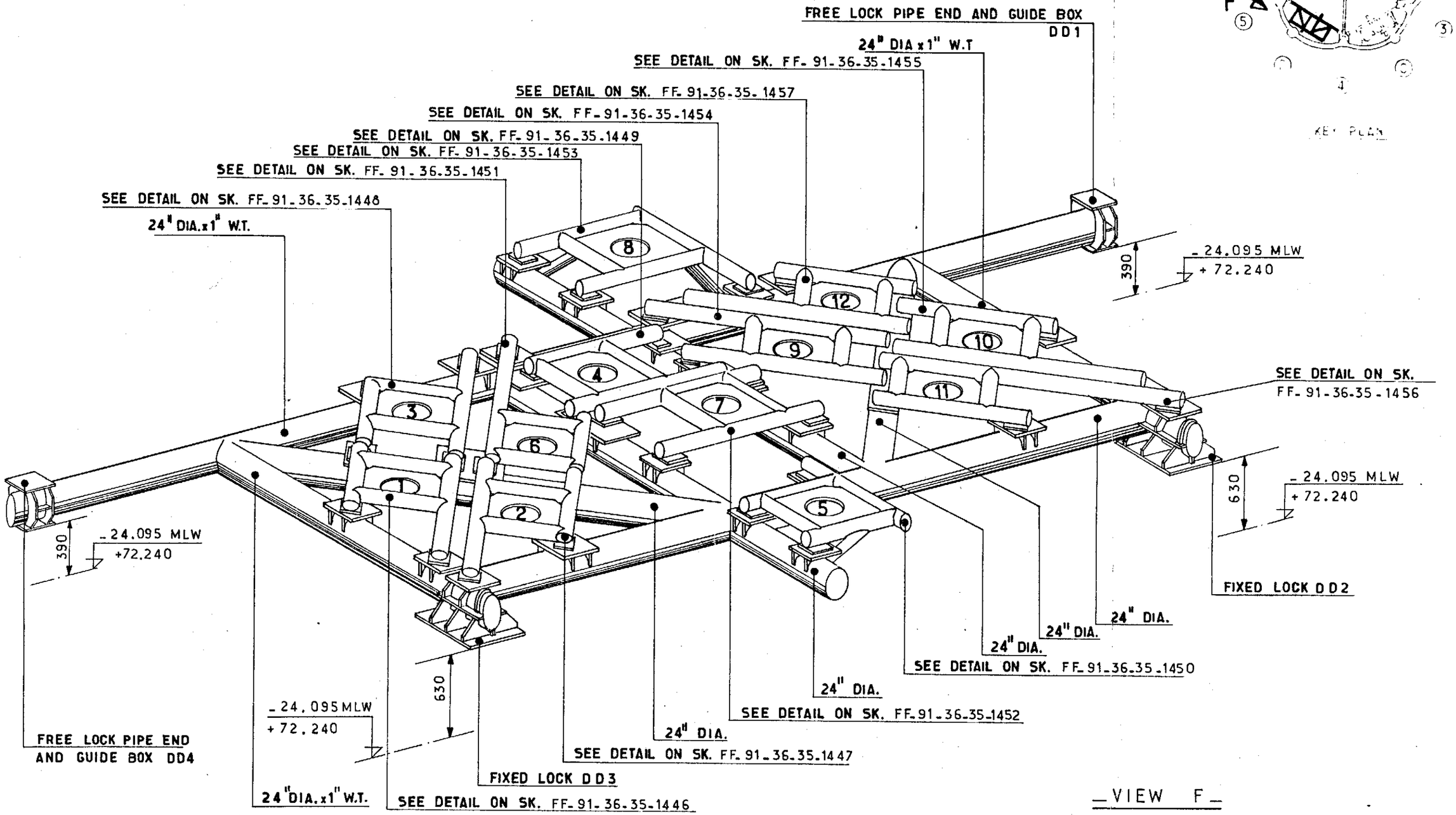

NOTES

FOR FREE LOCK PIPE ENDS AND GUIDE BOXES SEE SK FF.91.36.35.1458/1459/1460/1461.

Rev	Date	DESCRIPTION	by	app
1	12.83	UP DATED	B.V.H	J.L.C

Contractor JVD_1029_40.114

elf aquitaine norge a/s
p.o.box 168
4001 Stavanger

elf
FRIGG FIELD

Job no.	Installation	System
	CDP 1	UNDERWATER

Scale —

GENERAL VIEW OF CONDUCTOR GUIDE FRAME CELL D LEVEL D

Dwgr. no FF-91-36-35-1444 | Rev 1 | Sheet

CDP 1 AS BUILT DRAWINGS

REFERENCE DRAWING LIST FOR: CONDUCTOR GUIDE FRAME

ORIGINATOR	CONSTRUCTION DRAWING REF.	TITLE	Rev	Sheet	Size
C. G. DORIS	A0 MP QF 1041	WORKING DRAWING AND CUTTING OUT OF GUIDE FRAME	3		A0
" "	A1 MP QF 1063	GENERAL LAYOUT OF GUIDE FRAME	2		A1
" "	A1 MP QF 1054	GENERAL LAYOUT OF BASE PLATES	2		A1
" "	A0 MP QF 1110	POSITION OF DRILLING HOLES	2		A0
" "	A1 MP QF 1117	FIXED LOCK FOR GUIDE FRAME Ø 24" DD I	2		A1
" "	A1 MP QF 1118	FIXED LOCK FOR GUIDE FRAME Ø 24" DD II	2		A1
" "	A1 MP QF 1160	PIPE END OF GUIDE FRAME	1		A1
" "	A1 MP QF 1185	PIPE END FOR FREE LOCK OF GUIDE FRAME	1		A1
" "	A1 MP QF 1241	BOX FOR FREE LOCK	1		A1

ELF DRAWING NUMBER	REVISION Index	REVISION Date	TITLE

Rev.	Date	DESCRIPTION	by	app.

Contractor

elf aquitaine norge a/s
p.o.box 168
4001 Stavanger

elf

FRIGG FIELD

Job no.	Installation	System
	CDP 1	UNDERWATER
Scale		
Dwgr. no. FF 1444	Rev.	Sheet /

Form 100.318

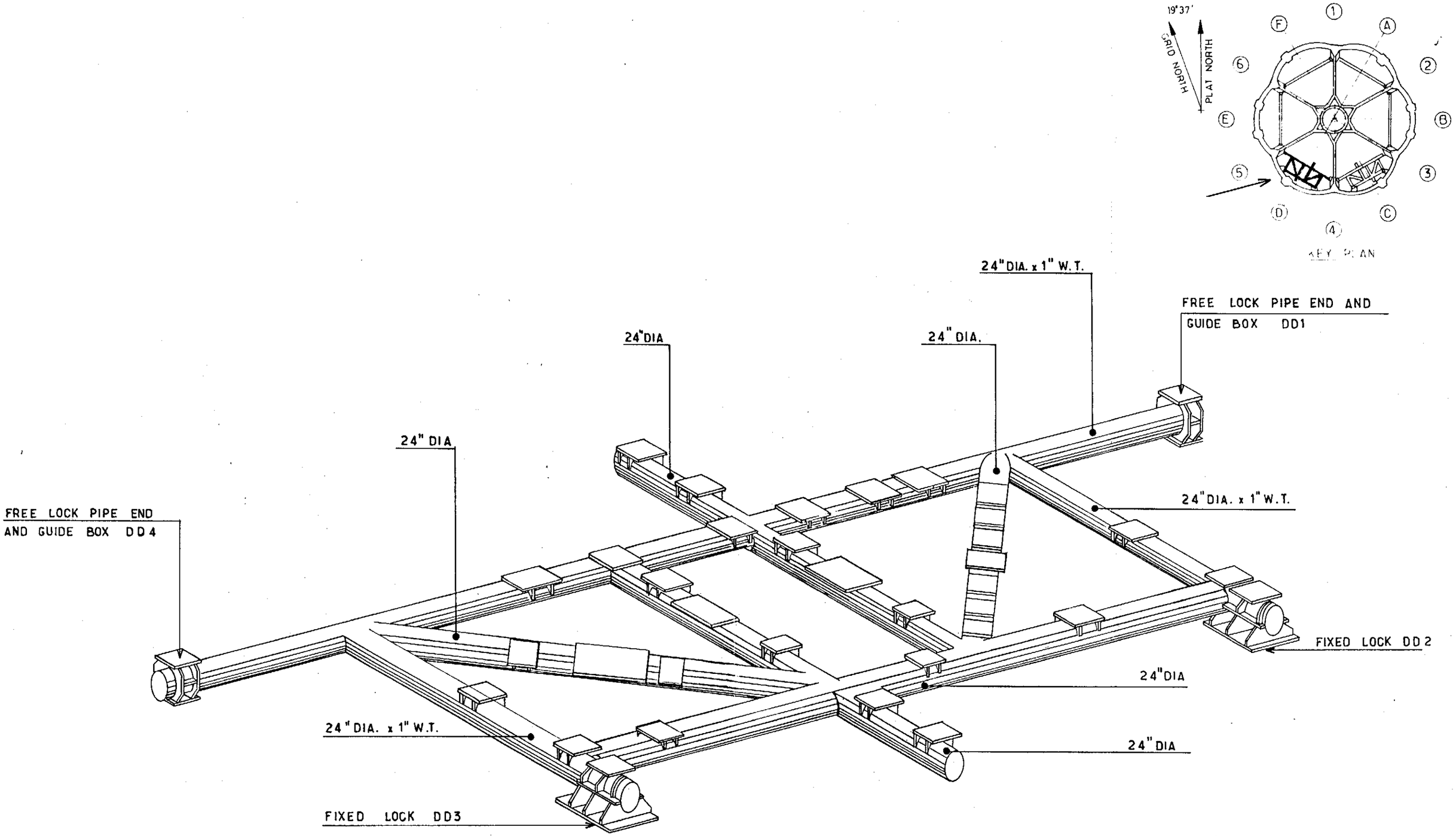

NOTES

F[redacted] SECONDARY FRAME DETAILS SEE SK FF.91.36.35.1446. TO FF.91.36.35.1457.
FOR FREE LOCK PIPE ENDS AND GUIDE BOXES SEE SK FF. 91.36.35.1458/ 1459/ 1460/ 1461.

Rev.	Date	DESCRIPTION	by	app.
1	12.83	UP DATED	B.VH	J.L.C

Contractor JVD 1029.40.115.

elf aquitaine norge a/s
p.o.box 168
4001 Stavanger

elf
FRIGG FIELD

Job no.	Installation	System
	CDP 1	UNDERWATER
Scale —	GENERAL VIEW OF SECONDARY FRAME SUPPORT CELL D LEVEL D	
Dwgr. no FF 91-36-35-1445.	1	—

CDP 1 AS BUILT DRAWINGS

REFERENCE DRAWING LIST FOR:

ORIGINATOR	CONSTRUCTION DRAWING REF.	TITLE	Rev	Sheet	Size
C.G. DORIS	A1.MP.QF.1054	GENERAL LAYOUT OF THE	1		A1
" "		BASE PLATES			
		LEVEL D CELL D			
" "	A1.MP.QF.1147	DETAIL OF BASE PLATE	1		A1
" "	A1.MP.QF.1148	" " " "	1		A1
" "	A1.MP.QF.1149	" " " "	1		A1
" "	A1.MP.QF.1154	" " " "	1		A1

ELF DRAWING NUMBER	REVISION Index	REVISION Date	TITLE

Rev.	Date	DESCRIPTION	by	app.

Contractor

elf aquitaine norge a/s
p.o.box 168
4001 Stavanger

elf
FRIGG FIELD

Job no.	Installation	System
	CDP 1	UNDERWATER
Scale		
Dwgr. no. FF 1445	Rev.	Sheet /

Form 100 318

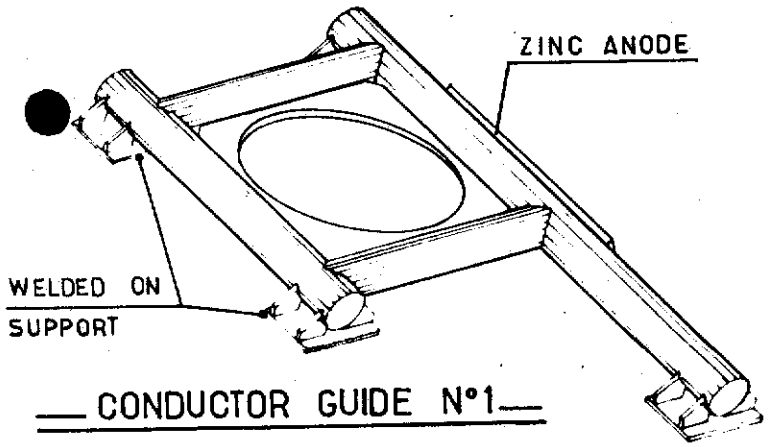

CONDUCTOR GUIDE N°1

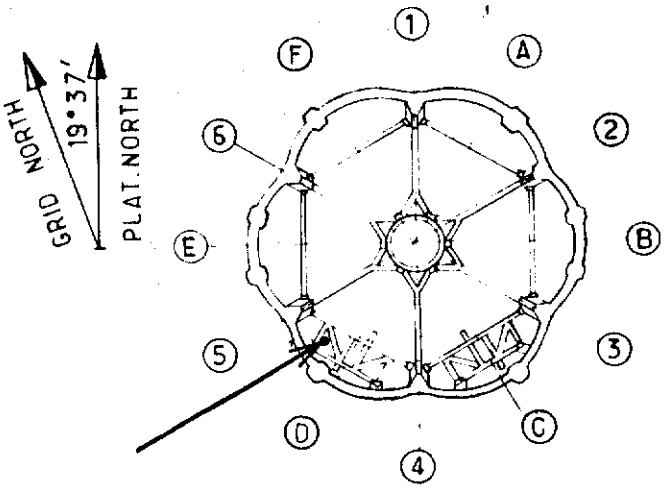

KEY PLAN

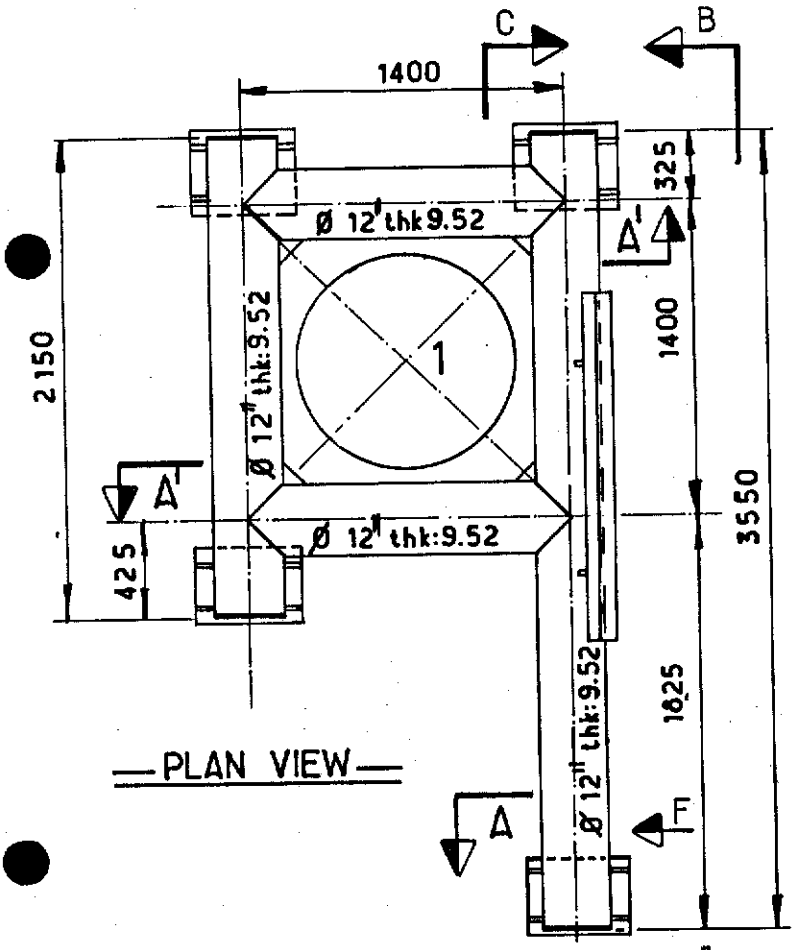

PLAN VIEW

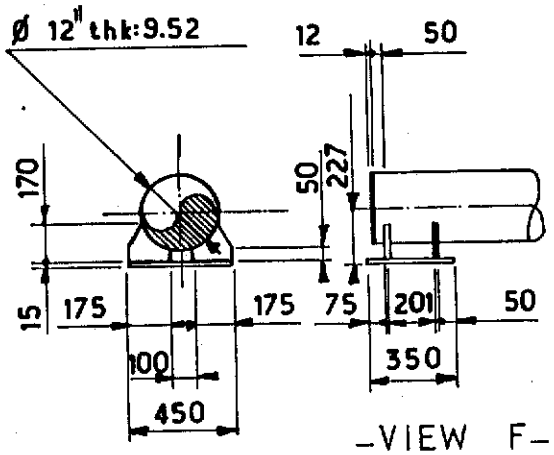

SECTION A

VIEW F

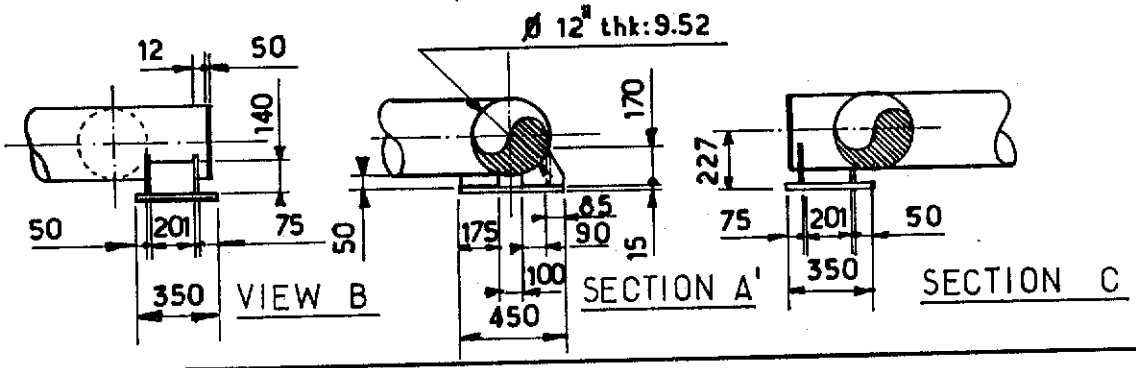

VIEW B

SECTION A'

SECTION C

NOTES:
FOR LOCATION SEE SK FF. 91.36.35.1444
FOR CONDUCTOR SLEEVE SEE SK FF. 91.36.35.1491.
FOR ZINC ANODE SEE SK FF 91-36-35-1587

Rev.	Date	DESCRIPTION	by	app.
1	12.83	UP DATED	B.V.H	J.L.C

Contractor JVD 1029_40.116_

elf aquitaine norge a/s
p.o.box 168
4001 Stavanger

elf
FRIGG FIELD

Job no.	Installation	System
	CDP 1	UNDERWATER
Scale 1:33	CONDUCTOR GUIDE N°1 CELL D SECONDARY FRAME LEVEL D	
Dwgr. no. FF 91.36.35.1446	No. 1	Sheet /

CDP 1 AS BUILT DRAWINGS

REFERENCE DRAWING LIST FOR:

ORIGINATOR	CONSTRUCTION DRAWING REF.	TITLE	Rev	Sheet	Size
C.G. DORIS	A1. MP. QF. 1082	SECONDARY FRAME FOR	1		A1.
		RULING OF THE CONDUCTORS			
		SLEEVE ZONE D.			

ELF DRAWING NUMBER	REVISION Index	REVISION Date	TITLE

Rev.	Date	DESCRIPTION	by	app.

Contractor

elf aquitaine norge a/s
p.o.box 168
4001 Stavanger

elf

FRIGG FIELD

Job no.	Installation	System
	CDP 1	UNDERWATER
Scale		
Dwgr. no. FF 1446	Rev	Sheet /

Form 100 31R

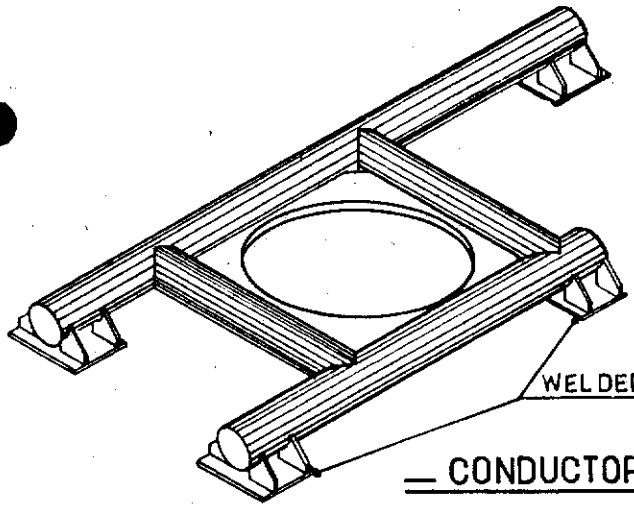

CONDUCTOR GUIDE N°2

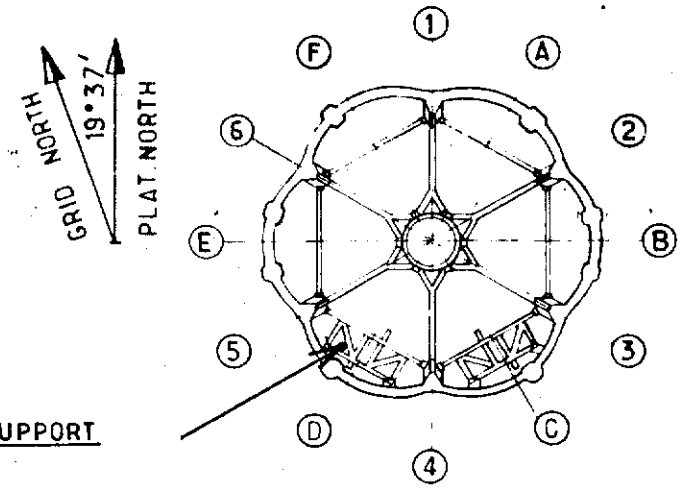

KEY PLAN

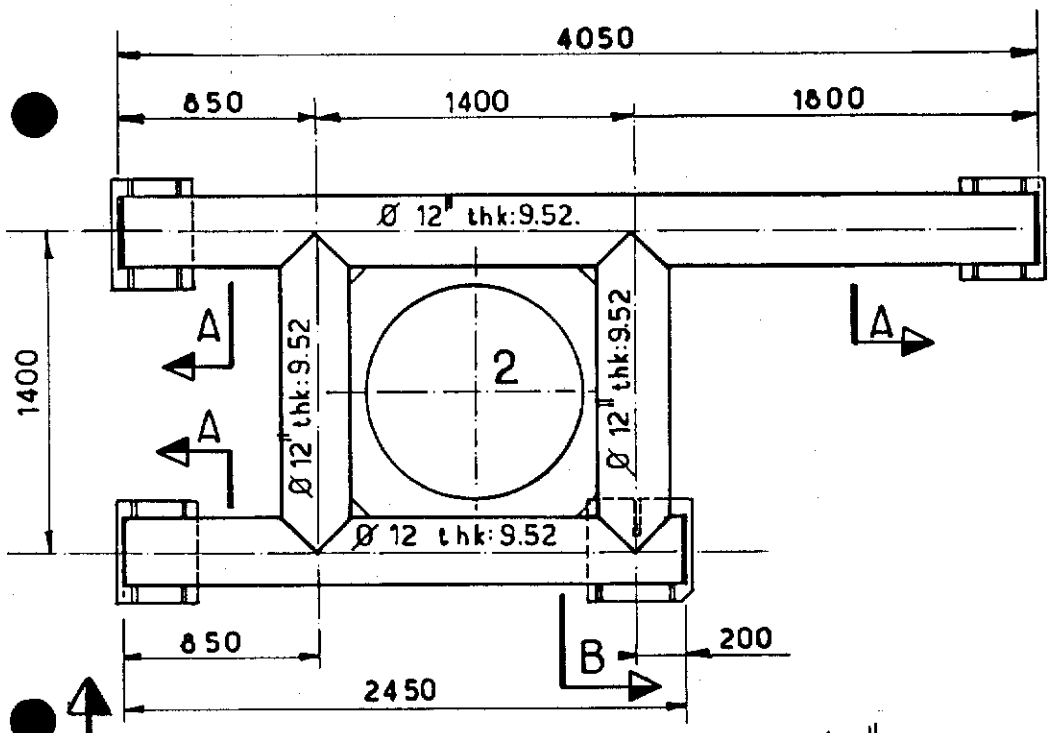

PLAN VIEW

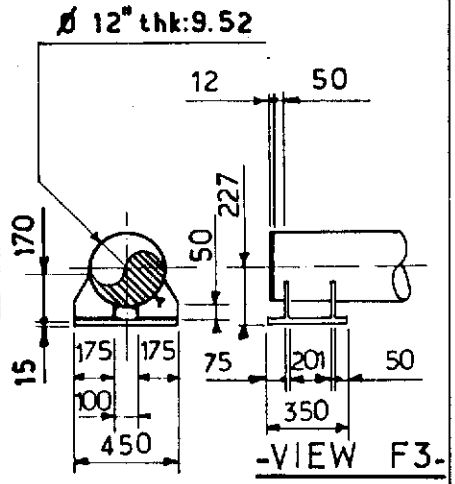

SECTION A

VIEW F3

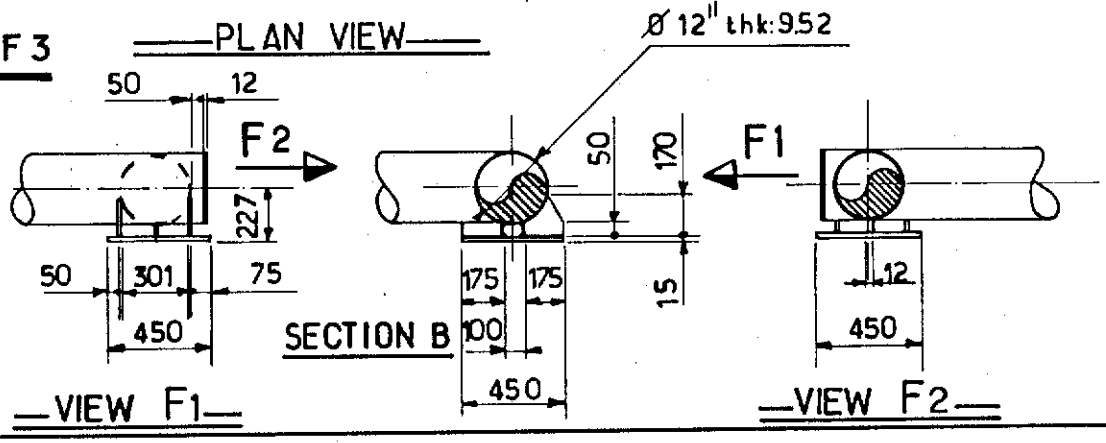

SECTION B

VIEW F1

VIEW F2

NOTES

FOR LOCATION SEE SK FF.91.36.35.1444.
FOR CONDUCTOR SLEEVE SEE SK FF.91.36.35.1491.

Rev.	Date	DESCRIPTION	by	app.
1	12.83	UP DATED	BVH	JLC

Contractor JVD 1029_40_117_

elf aquitaine norge a/s
p.o.box 168
4001 Stavanger

elf
FRIGG FIELD

Job no.	Installation	System
	CDP 1	UNDERWATER
Scale 1:33	CONDUCTOR GUIDE N°2 CELL D SECONDARY FRAME LEVEL D	
Dwgr. no. FF 91.36.35.1447.	Rev 1	Sheet /

Form 100 318

CDP 1 AS BUILT DRAWINGS

REFERENCE DRAWING LIST FOR:

ORIGINATOR	CONSTRUCTION DRAWING REF.	TITLE	Rev	Sheet	Size
C. G. DORIS	41. MP. QF. 1084	SECONDARY FRAME FOR	1		A1
		RULING OF THE CONDUCTORS			
		SELEEVE ZONE D			

ELF DRAWING NUMBER	REVISION Index	REVISION Date	TITLE

Rev.	Date	DESCRIPTION	by	app.

Contractor

elf aquitaine norge a/s
p.o.box 168
4001 Stavanger

elf

FRIGG FIELD

Job no.	Installation CDP 1	System UNDERWATER
Scale		
Dwgr. no. FF 1447	Rev.	Sheet /

Form 160 318

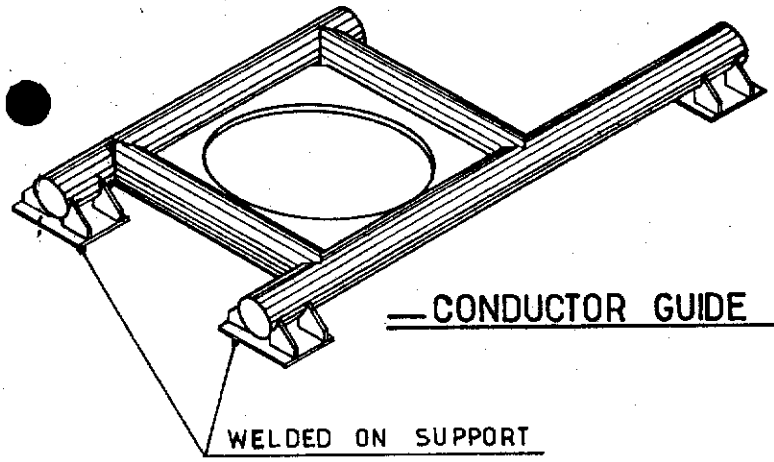

CONDUCTOR GUIDE N°3

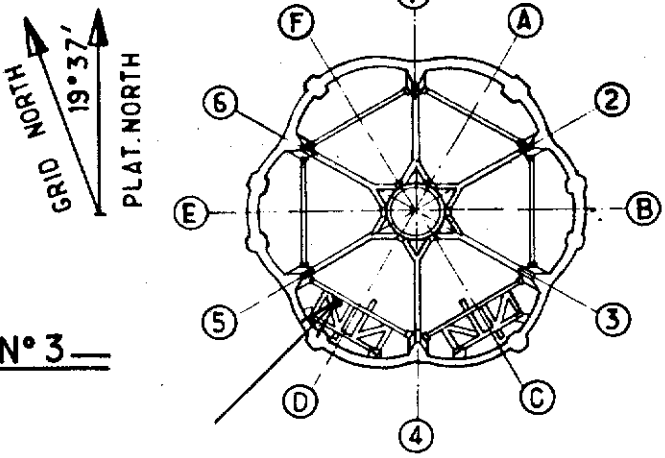

KEY PLAN

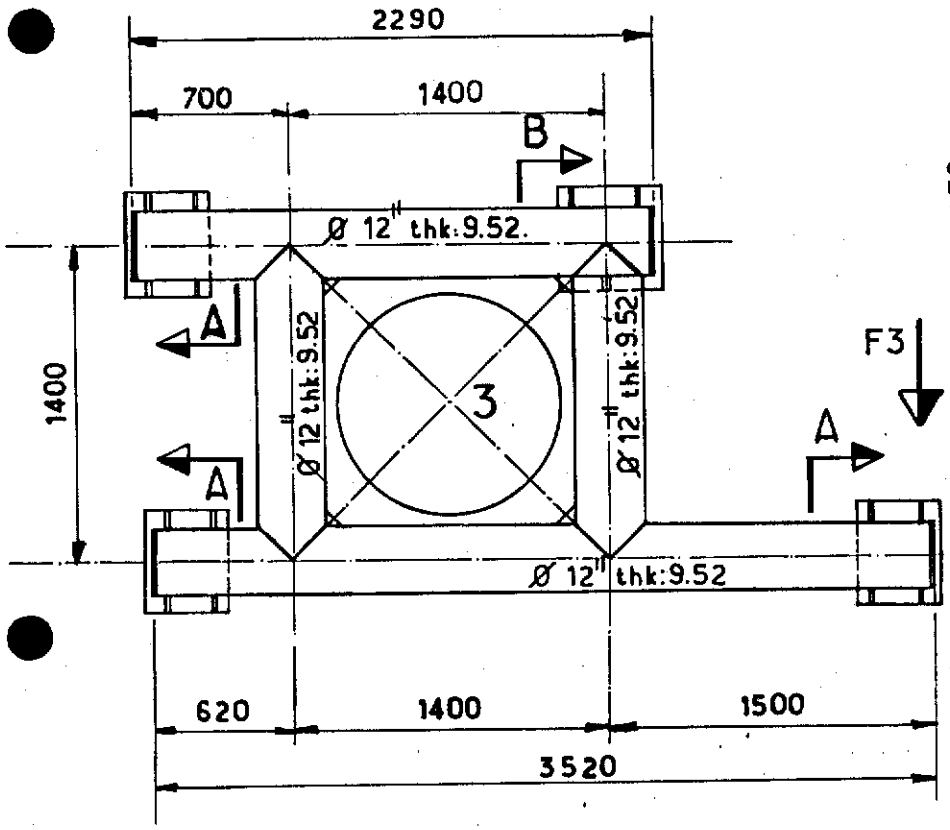

PLAN VIEW

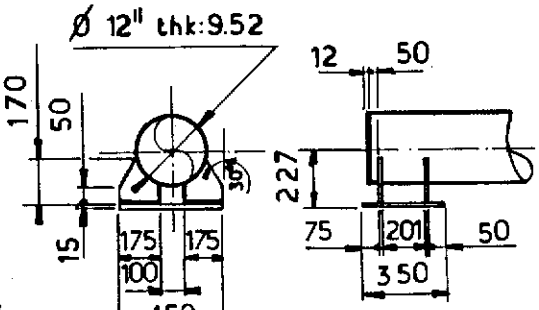

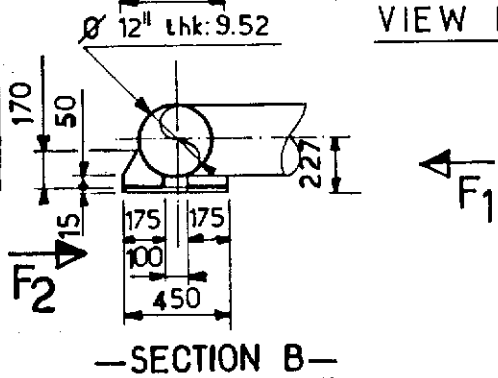

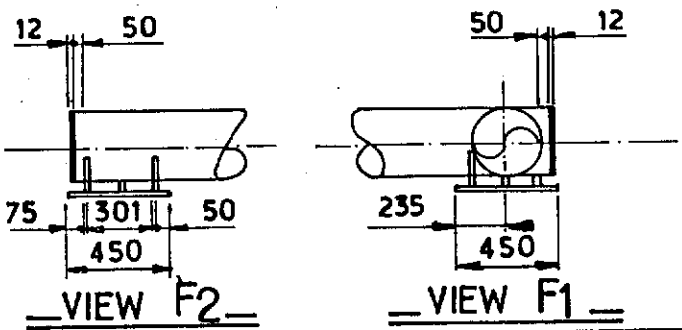

NOTES

FOR LOCATION SEE SK FF. 91.36.35. 1444

FOR CONDUCTOR SLEEVE SEE SK FF. 91. 36.35.1491.

Rev.	Date	DESCRIPTION	by	app.
1	12.83	UP DATED	L.V.H	J.C

Contractor JVD 1029_40_118.

elf aquitaine norge a/s
p.o.box 168
4001 Stavanger

elf
FRIGG FIELD

Job no.	Installation	System
	CDP 1	UNDERWATER
Scale 1:33	CONDUCTOR GUIDE N°3 CELL D SECONDARY FRAME LEVEL D	
Dwgr. no. FF. 91. 36. 35. 1448	Rev. 1	Sheet /

Form 100.318

CDP 1 AS BUILT DRAWINGS

REFERENCE DRAWING LIST FOR:

ORIGINATOR	CONSTRUCTION DRAWING REF.	TITLE	Rev	Sheet	Size
C.G. DORIS	A1.MP.QF.1083	SECONDARY FRAME FOR	1		A1
		RULING OF THE CONDUCTORS			
		SELEEVE ZONE D.			

ELF DRAWING NUMBER	REVISION Index	REVISION Date	TITLE

Rev.	Date	DESCRIPTION	by	app.

Contractor

elf aquitaine norge a/s
p.o.box 168
4001 Stavanger

elf

FRIGG FIELD

Job no.	Installation	System
	CDP 1	UNDERWATER
Scale		
Dwgr. no. FF ___ ___ 1448	Rev	Sheet /

CONDUCTOR GUIDE N°4

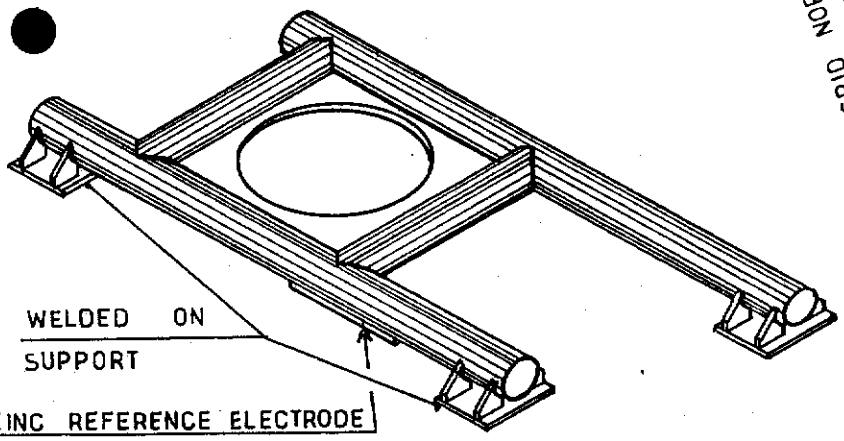

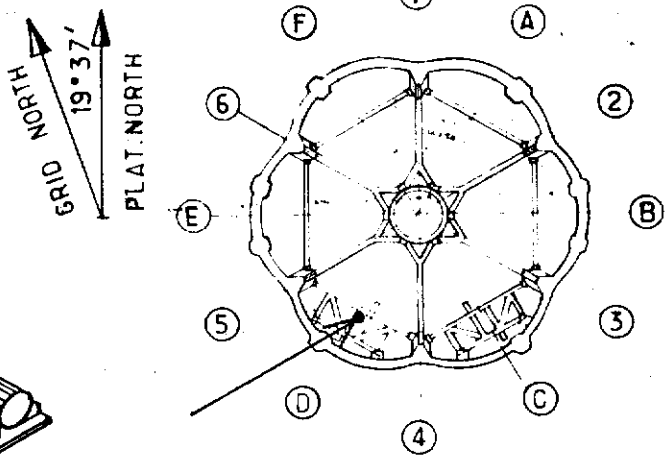

KEY PLAN

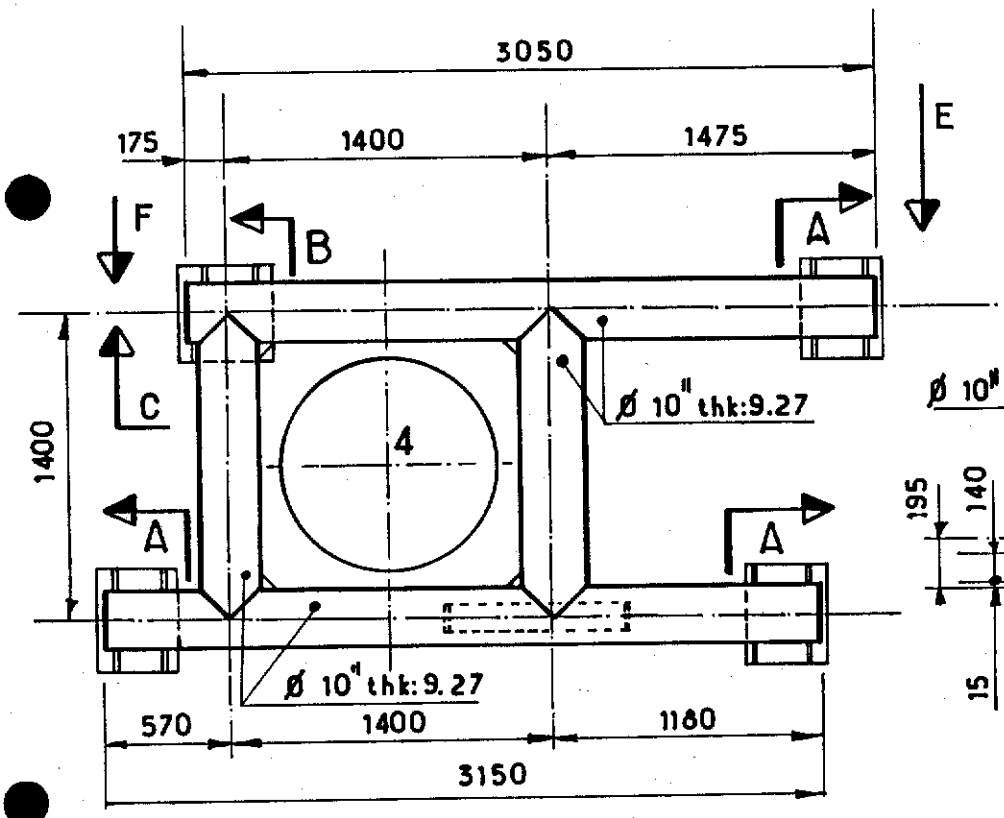

PLAN VIEW

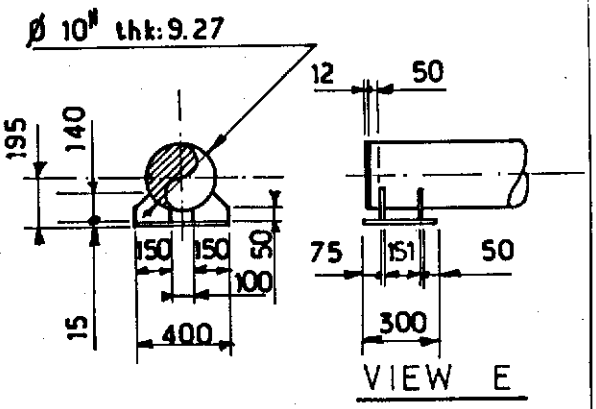

VIEW E

SECTION A

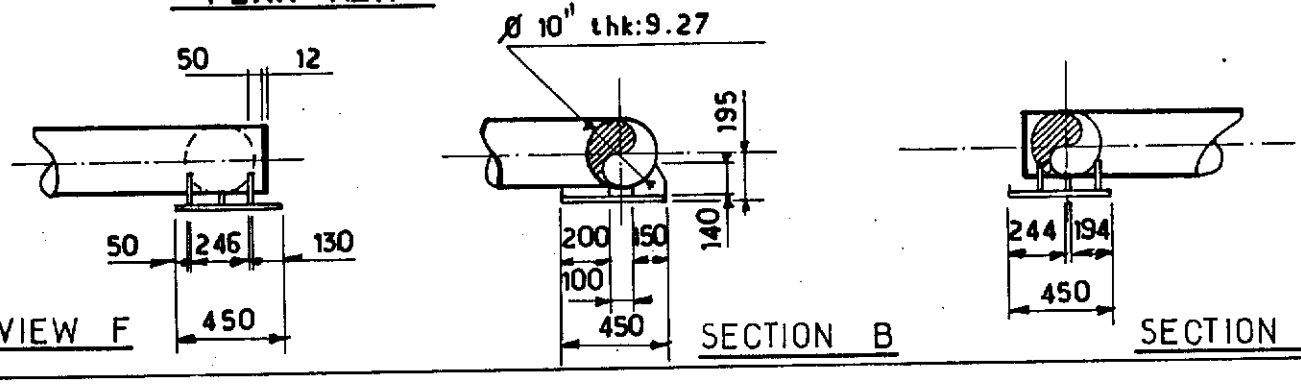

VIEW F

SECTION B

SECTION C

NOTES

FOR LOCATION SEE SK FF.91.36.35.1444
FOR CONDUCTOR SLEEVE SEE SK FF.91.36.35.1491

FOR ZINC REFERENCE ELECTRODE SEE SK FF 91-36-35-1568

Rev.	Date	DESCRIPTION	by	app.
1	12.83	UP DATED	B.V.H	J.C

Contractor JVD 1029_40_119

elf aquitaine norge a/s
p.o.box 168
4001 Stavanger

elf
FRIGG FIELD

Job no.	Installation	System
	CDP 1	UNDERWATER

Scale 1:33

CONDUCTOR GUIDE N°4 CELL D
SECONDARY FRAME LEVEL D

Dwgr. no. FF. 91.36.35.1449. 1

CDP 1 AS BUILT DRAWINGS

REFERENCE DRAWING LIST FOR:

ORIGINATOR	CONSTRUCTION DRAWING REF.	TITLE	Rev	Sheet	Size
C.G. DORIS	A1. MP. QF. 1086	SECONDARY FRAME FOR	2		A1.
		RULING OF THE CONDUCTORS			
		SELEEVE ZONE D.			

ELF DRAWING NUMBER	REVISION Index	REVISION Date	TITLE

Rev.	Date	DESCRIPTION	by	app.

Contractor

elf aquitaine norge a/s
p.o.box 168
4001 Stavanger

elf

FRIGG FIELD

Job no.	Installation	System
	CDP 1	UNDERWATER
Scale		
Dwgr. no. FF ___ ___ 1449	Rev	Sheet /

Form 100 318

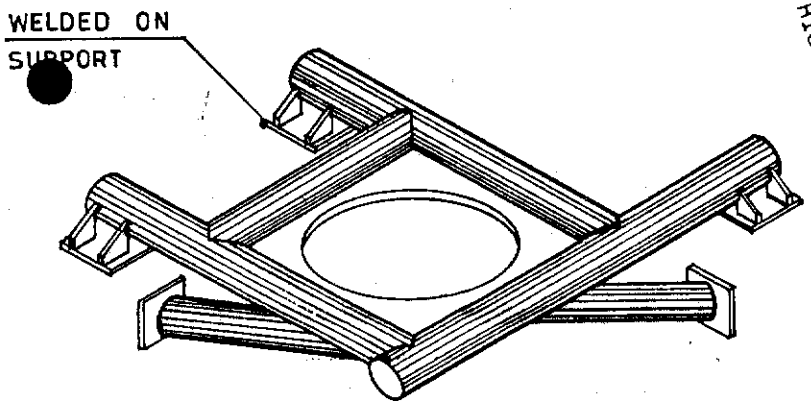

CONDUCTOR GUIDE N°5

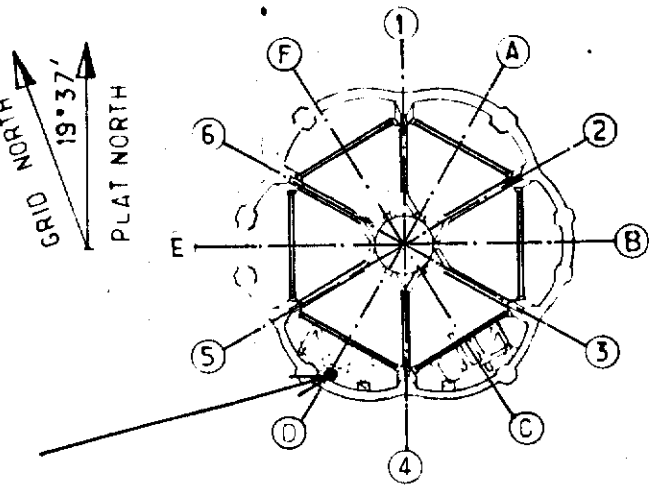

KEY PLAN

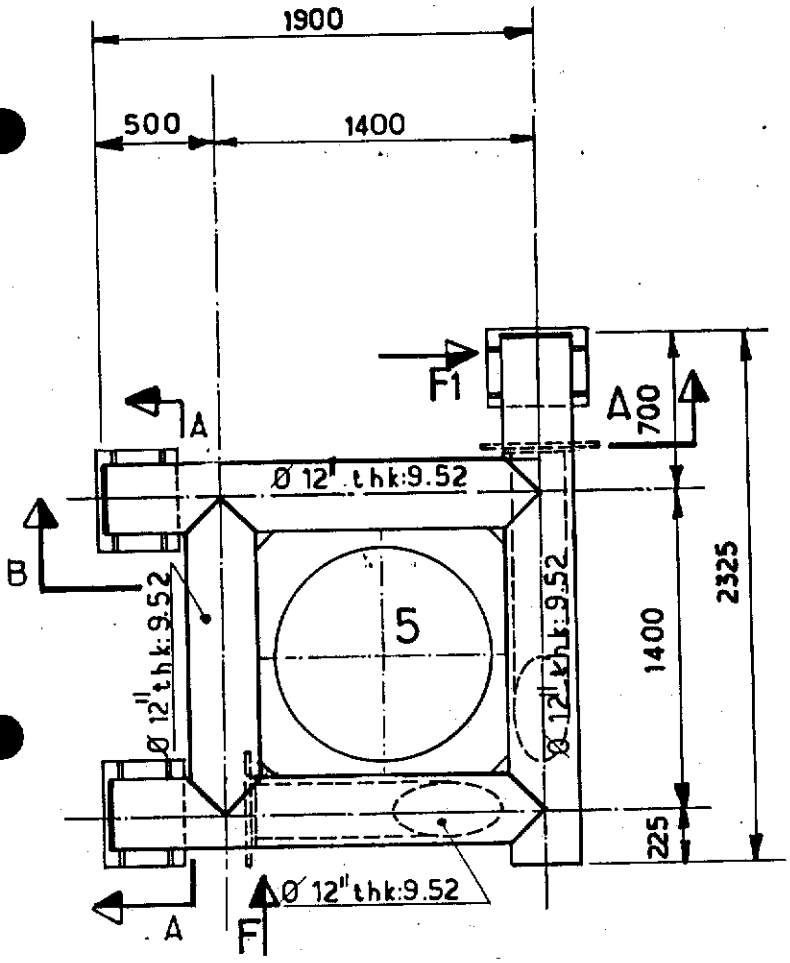

PLAN VIEW

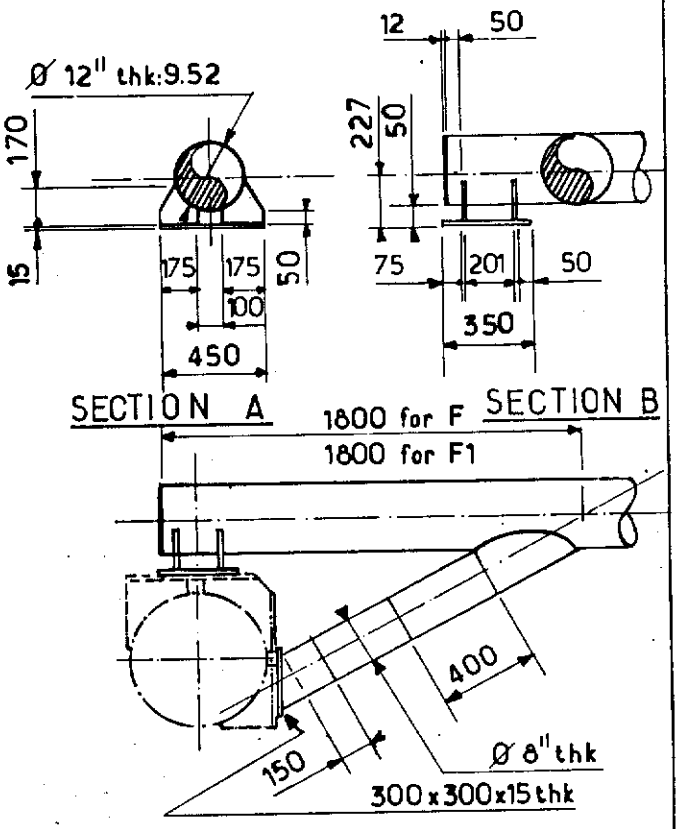

VIEW F AND F1

NOTES

FOR LOCATION SEE SK FF. 91.36.35.1444
FOR CONDUCTOR SLEEVE SEE SK FF. 91-36-35-1491

Rev.	Date	DESCRIPTION	by	app.
1	12.83	UP DATED	BVH	JLC

Contractor JVD 1029_40_120

elf aquitaine norge a/s
p.o.box 168
4001 Stavanger

elf
FRIGG FIELD

Job no.	Installation	System
	CDP 1	UNDERWATER
Scale 1:33	CONDUCTOR GUIDE N°5 CELL D SECONDARY FRAME LEVEL D	
Dwgr. no FF_91_36_35_1450	Rev. 1	Sheet

CDP 1 AS BUILT DRAWINGS

REFERENCE DRAWING LIST FOR:

ORIGINATOR	CONSTRUCTION DRAWING REF.	TITLE	Rev	Sheet	Size
C.G. DORIS	A1. MP. QF. 1088	SECONDARY FRAME FOR	1		A1
		RULING OF THE CONDUCTORS			
		SELEEVE ZONE D.			

ELF DRAWING NUMBER	REVISION Index	REVISION Date	TITLE

Rev.	Date	DESCRIPTION	by	app.

Contractor

elf aquitaine norge a/s
p.o.box 168
4001 Stavanger

elf

FRIGG FIELD

Job no.	Installation	System
	CDP 1	UNDERWATER
Scale		
Dwgr. no. FF ___ ___ 1450	Rev	Sheet /

Form 100 318

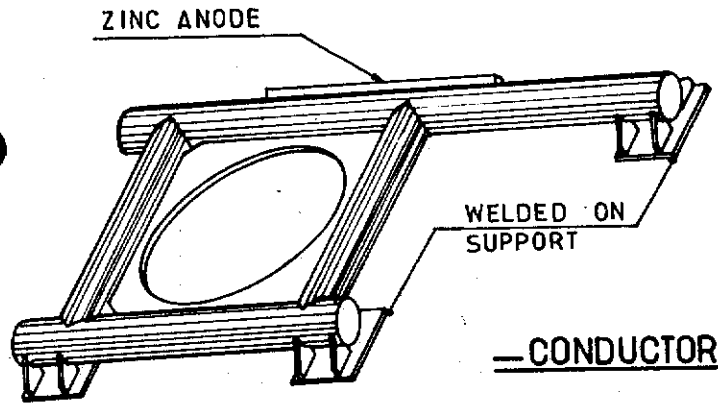

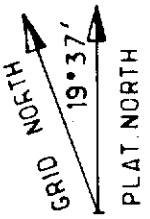

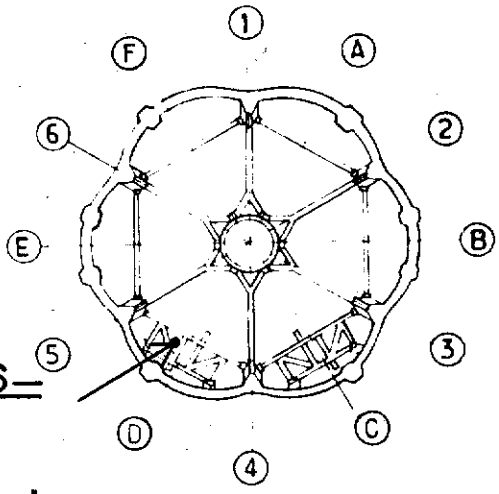

KEY PLAN

CONDUCTOR GUIDE N°6

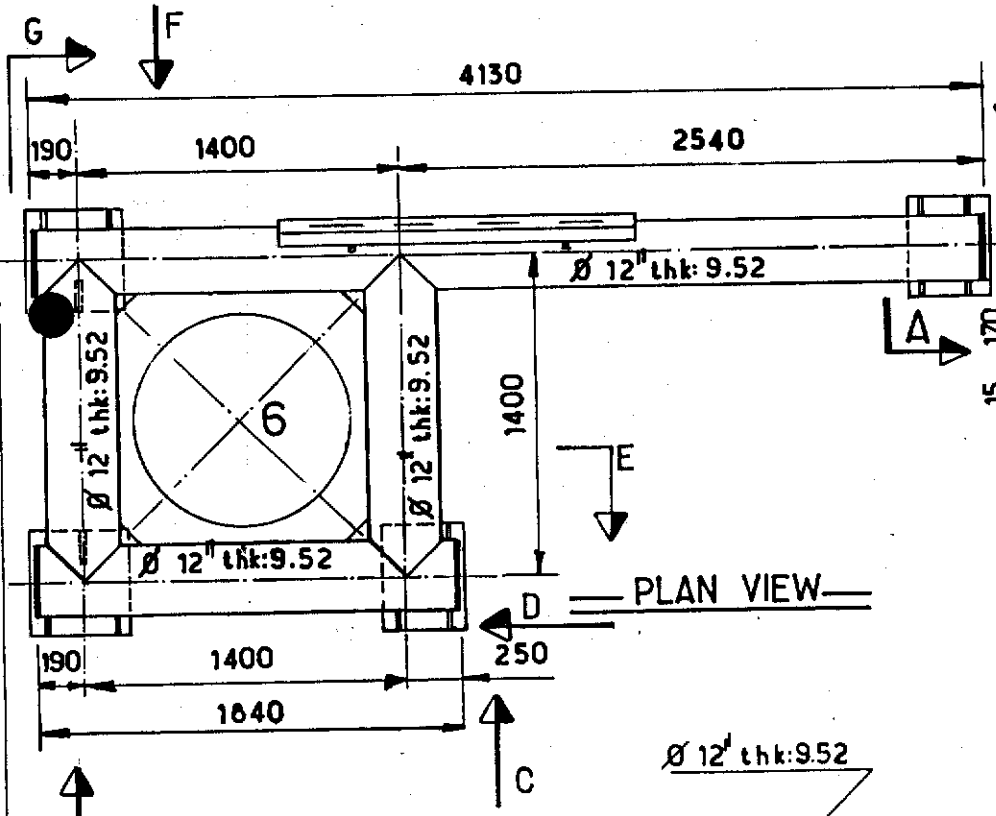

PLAN VIEW

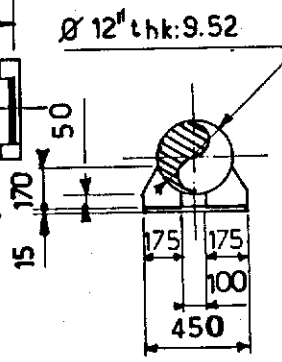

SECTION A

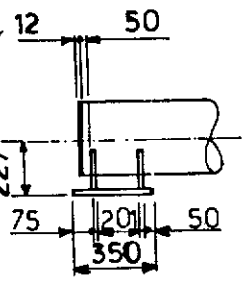

VIEW B

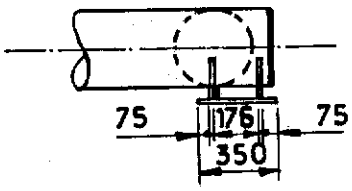

VIEW C

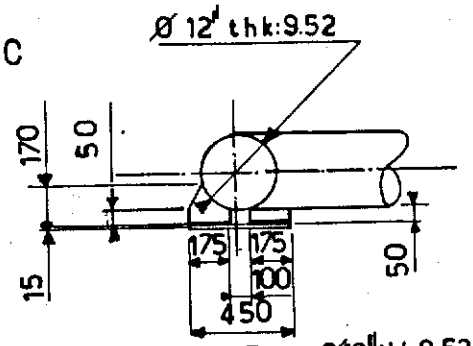

VIEW D

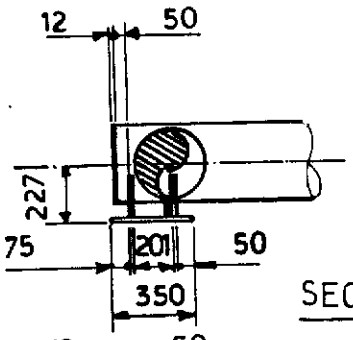

SECTION E

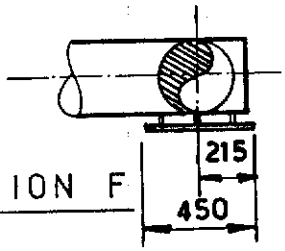

SECTION F

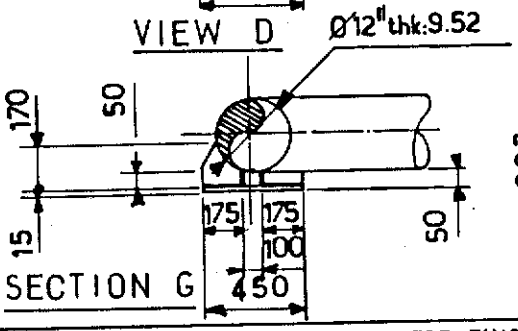

SECTION G

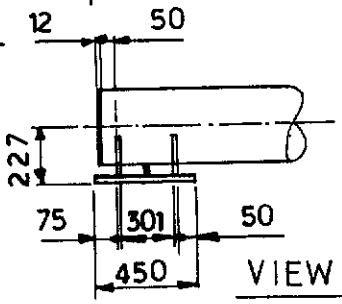

VIEW H

NOTES

FOR LOCATION SEE SK FF-91-36-35-1444 FOR ZINC ANODE SEE SK. FF 91-36-35-1587
FOR CONDUCTOR SLEEVE SEE SK FF-91-36-35-1491

Rev.	Date	DESCRIPTION	by	app.
1	12.83	UP DATED	BVH	FLC

Contractor JVD 1029_40_121_

elf aquitaine norge a/s
p.o.box 168
4001 Stavanger

elf
FRIGG FIELD

Job no.	Installation	System
	CDP 1	UNDERWATER
Scale 1:33	CONDUCTOR GUIDE N°6 CELL D SECONDARY FRAME LEVEL D	
Dwgr. no. FF 91_36_35_1451_	Rev. 1	Sheet /

CDP 1 AS BUILT DRAWINGS

REFERENCE DRAWING LIST FOR:

ORIGINATOR	CONSTRUCTION DRAWING REF.	TITLE	Rev	Sheet	Size
C.G. DORIS	A1.MP. QF. 1085	SECONDARY FRAME FOR	1		A1
		RULING OF THE CONDUCTORS			
		SELEEVE ZONE D.			

ELF DRAWING NUMBER	REVISION Index	REVISION Date	TITLE

Rev.	Date	DESCRIPTION	by	app.

Contractor

elf aquitaine norge a/s
p.o.box 168
4001 Stavanger

elf

FRIGG FIELD

Job no.	Installation	System
	CDP 1	UNDERWATER
Scale		
Dwgr. no. FF ___ ___ 1451	Rev.	Sheet /

Form 100 31R

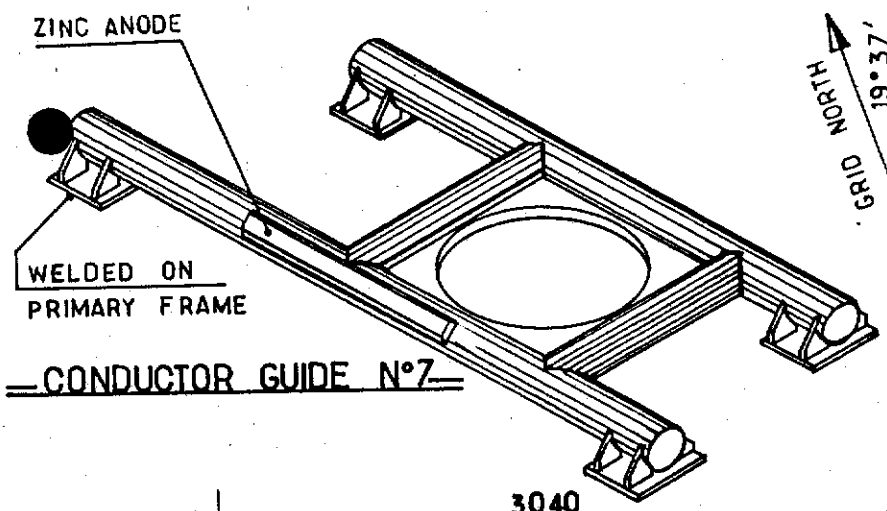

CONDUCTOR GUIDE N°7

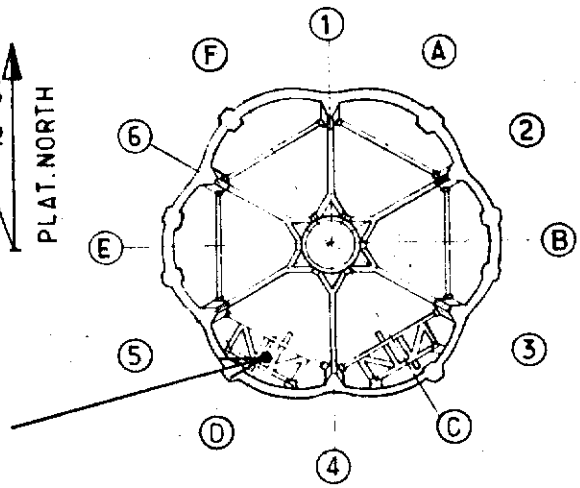

KEY PLAN

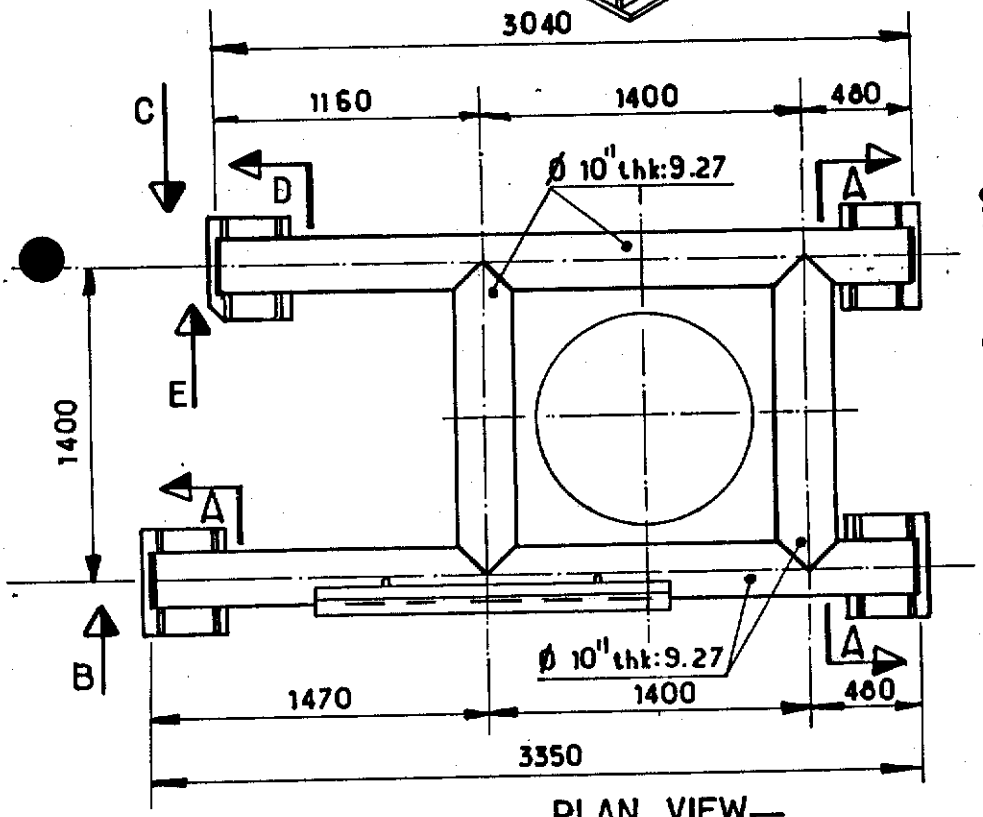

PLAN VIEW

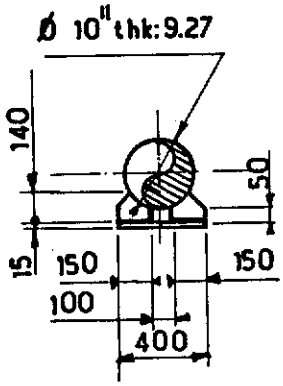

SECTION A

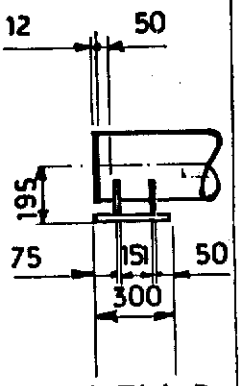

VIEW B

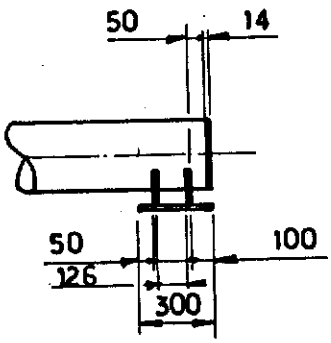

VIEW C

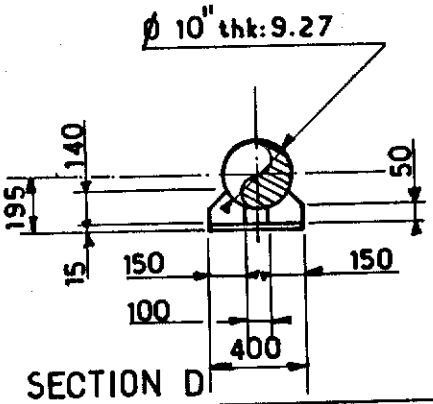

SECTION D

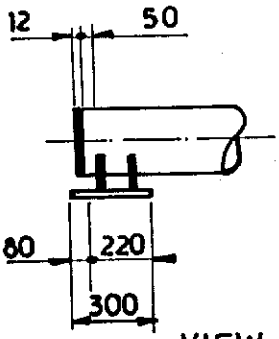

VIEW E

NOTES FOR LOCATION SEE SK FF-91-36-35-1444 FOR ZINC ANODE SEE SK.FF 91-36-35-1587
FOR CONDUCTOR SLEEVE SEE SK FF-91-36-35-1491

Rev.	Date	DESCRIPTION	by	app.
1	12.83	UP DATED	BVH	JLC

Contractor JVD 1029_40_122

elf aquitaine norge a/s
p.o.box 168
4001 Stavanger

elf
FRIGG FIELD

Job no.	Installation	System
	CDP 1	UNDERWATER
Scale 1:33	CONDUCTOR GUIDE N°7 CELL D SECONDARY FRAME LEVEL D	
Dwgr. no. FF_91_36_35_1452	Rev. 1	Sheet /

CDP 1 AS BUILT DRAWINGS

REFERENCE DRAWING LIST FOR:

ORIGINATOR	CONSTRUCTION DRAWING REF.	TITLE	Rev	Sheet	Size
C.G. DORIS	A1. HP. QF 1087	SECONDARY FRAME FOR	2		A1
		RULING OF THE CONDUCTORS			
		SELEEVE ZONE D.			

ELF DRAWING NUMBER	REVISION Index	REVISION Date	TITLE

Rev.	Date	DESCRIPTION	by	app.

Contractor

elf aquitaine norge a/s
p.o.box 168
4001 Stavanger

elf
FRIGG FIELD

Job no.	Installation	System
	CDP 1	UNDERWATER
Scale		
Dwgr. no. FF 1452	Rev	Sheet 1

Form 100 318

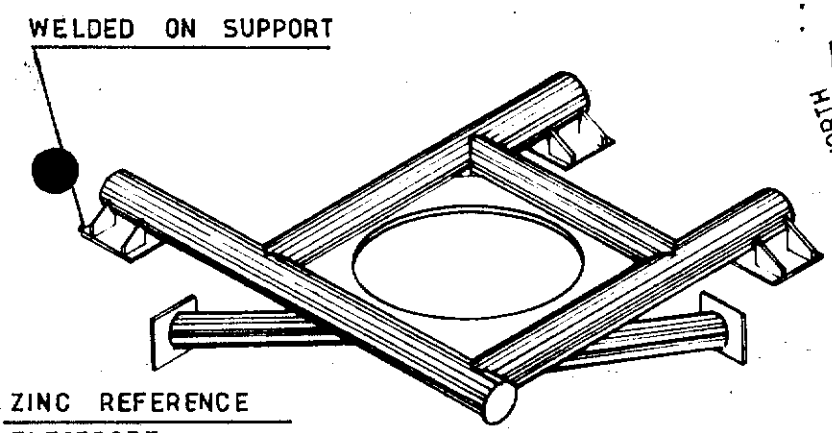

CONDUCTOR GUIDE N°8

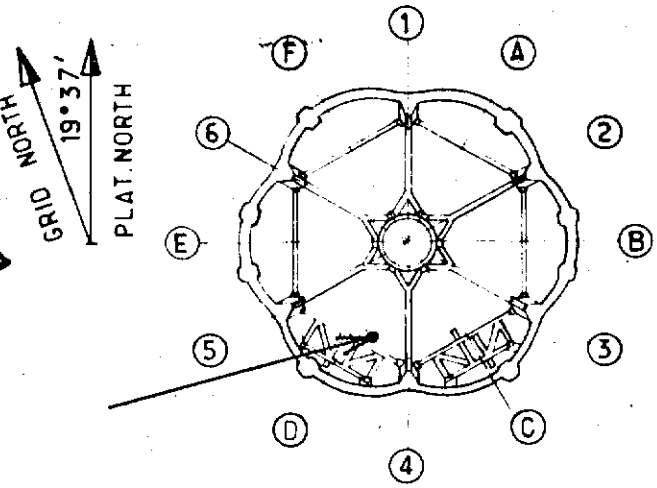

KEY PLAN

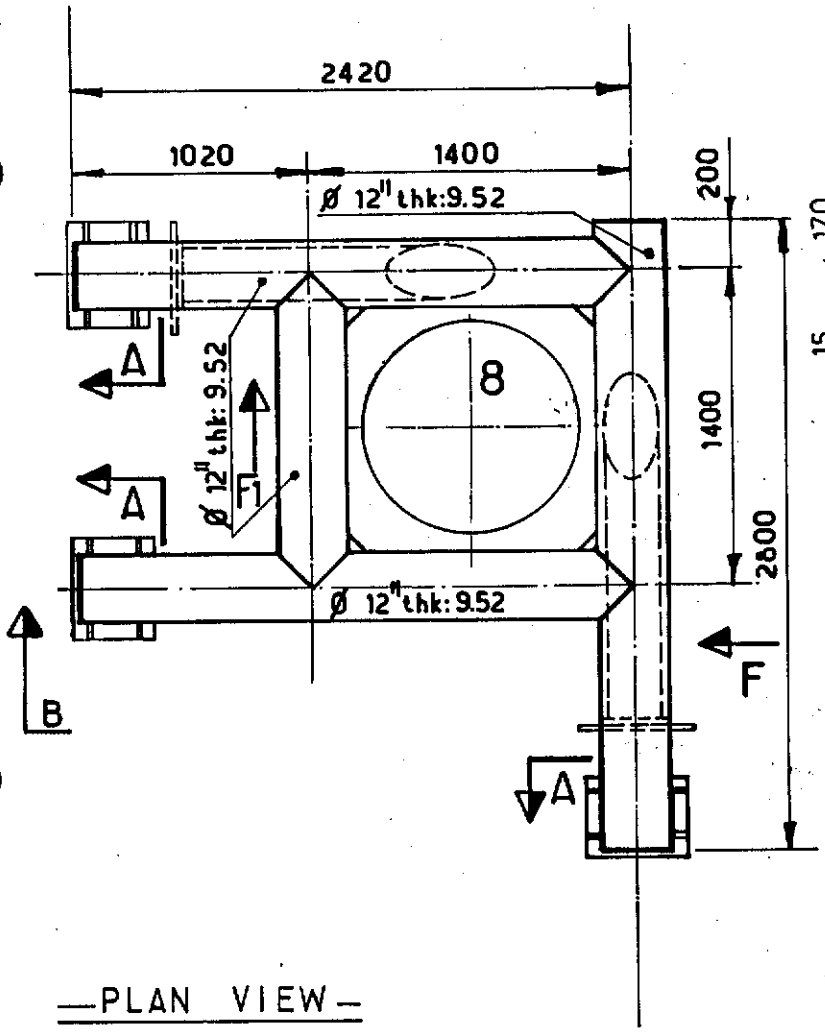

PLAN VIEW

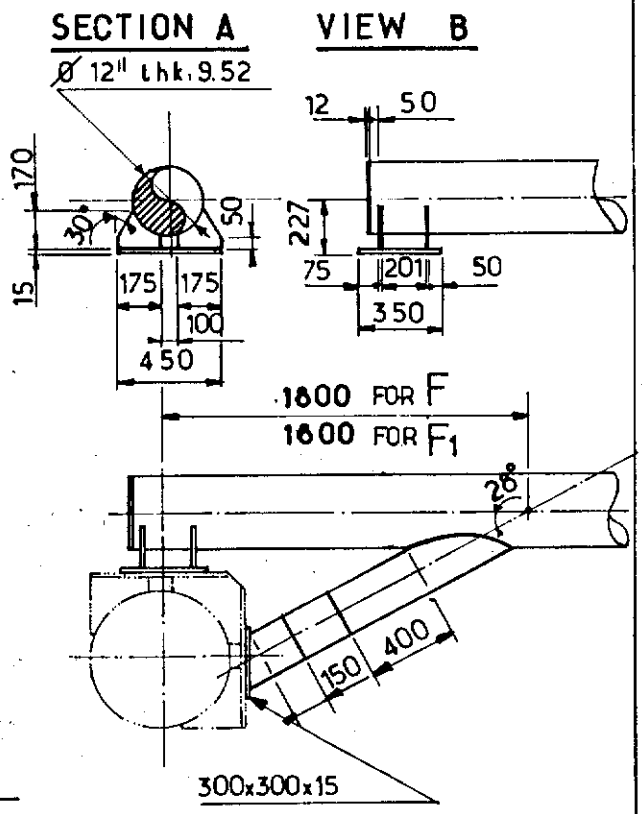

VIEW F AND F1

NOTES

FOR LOCATION SEE SK. FF.91.36.35.1444
FOR CONDUCTOR SLEEVE SEE SK. FF.91.36.35.1491.

Rev.	Date	DESCRIPTION	by	app.
1	12.83	UP DATED	BVH	JLC

Contractor JVD 1029_40_123

elf aquitaine norge a/s
p.o.box 168
4001 Stavanger

elf
FRIGG FIELD

Job no.	Installation	System
	CDP 1	UNDERWATER
Scale 1:33	CONDUCTOR GUIDE N°8 CELL D SECONDARY FRAME LEVEL D	
Dwgr. no. FF.91.36.35.1453	Rev. 1	Sheet /

Form 190 318

CDP 1 AS BUILT DRAWINGS

REFERENCE DRAWING LIST FOR:

ORIGINATOR	CONSTRUCTION DRAWING REF.	TITLE	Rev	Sheet	Size
C.G. DORIS	A1. MP. QF. 1089	SECONDARY FRAME FOR	1		A1.
		RULING OF THE CONDUCTORS			
		SELEEVE ZONE D.			

ELF DRAWING NUMBER	REVISION Index	REVISION Date	TITLE

Rev.	Date	DESCRIPTION	by	app.

Contractor

elf aquitaine norge a/s
p.o.box 168
4001 Stavanger

elf

FRIGG FIELD

Job no.	Installation	System
	CDP 1	UNDERWATER
Scale		
Dwgr. no. FF 1453	Rev.	Sheet /

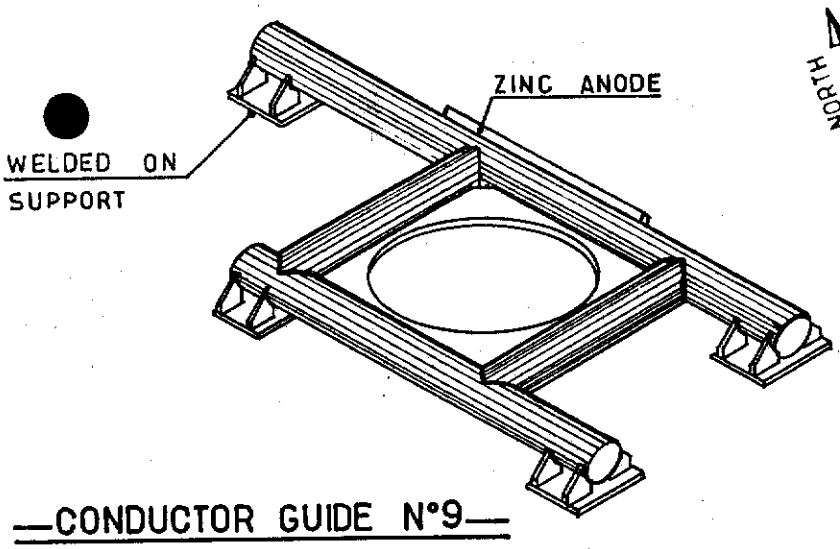

CONDUCTOR GUIDE N°9

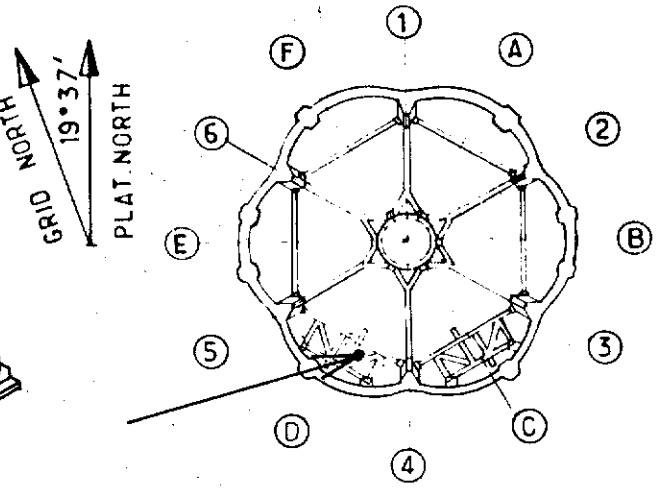

KEY PLAN

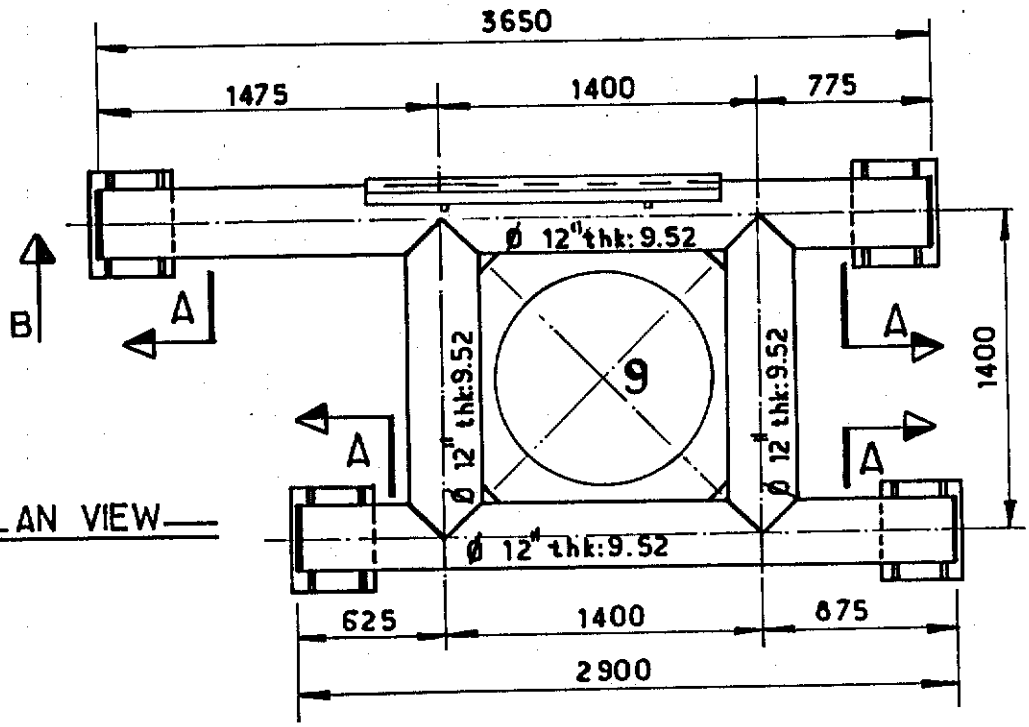

PLAN VIEW

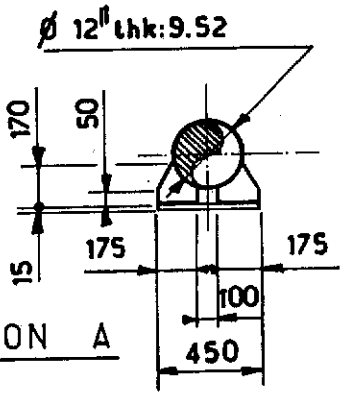

SECTION A

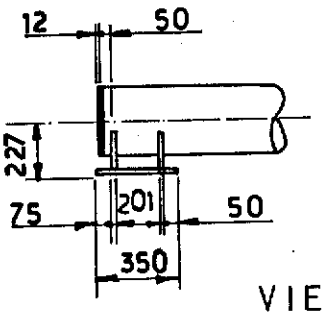

VIEW B

NOTES

FOR LOCATION SEE SK FF.91.36.35.1444.

FOR CONDUCTOR SLEEVE SEE SK FF.91.36.35.1491.

FOR ZINC ANODE SEE SK.FF 91-36-35-1587

Rev.	Date	DESCRIPTION	by	app.
1	12.83	UP DATED	BVH	JLC

Contractor JVD 1029_40_124.

elf aquitaine norge a/s
p.o.box 168
4001 Stavanger

elf
FRIGG FIELD

Job no.	Installation	System
	CDP 1	UNDERWATER
Scale 1:33	CONDUCTOR GUIDE N°9 CELL D SECONDARY FRAME LEVEL D	
Dwgr. no. FF_91_36_35_1454_	Rev. 1	Sheet

CDP 1 AS BUILT DRAWINGS

REFERENCE DRAWING LIST FOR:

ORIGINATOR	CONSTRUCTION DRAWING REF.	TITLE	Rev	Sheet	Size
C. G. DORIS	A1. MP. QF. 1090	SECONDARY FRAME FOR	1		A1.
		RULING OF THE CONDUCTORS			
		SELEEVE ZONE D.			

ELF DRAWING NUMBER	REVISION Index	REVISION Date	TITLE

Rev.	Date	DESCRIPTION	by	app.

Contractor

elf aquitaine norge a/s
p.o.box 168
4001 Stavanger

elf
FRIGG FIELD

Job no.	Installation	System
	CDP 1	UNDERWATER
Scale		
Dwgr. no. FF 1454	Rev.	Sheet /

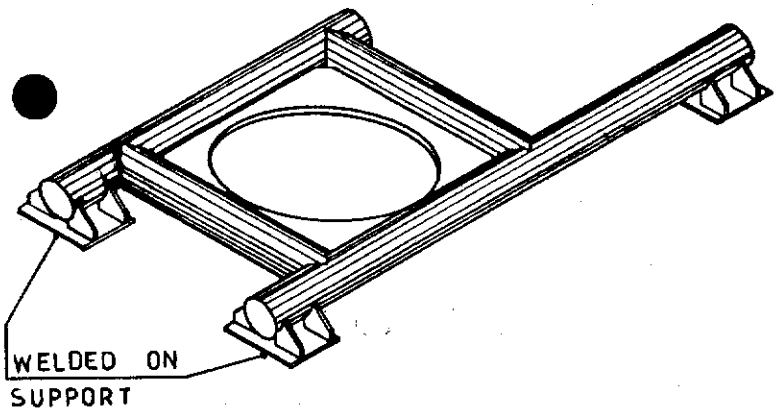

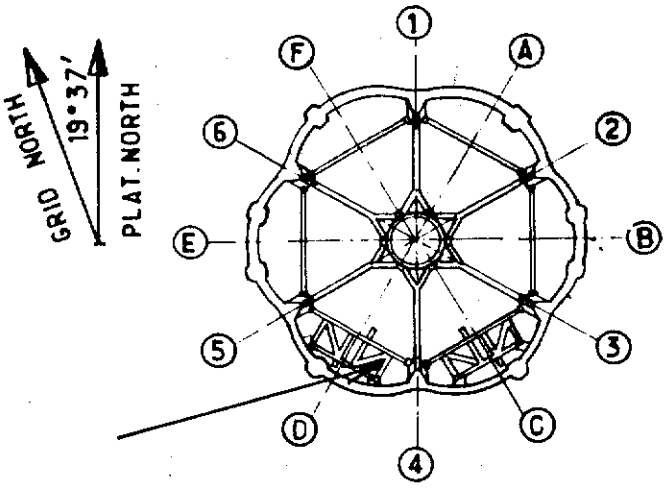

CONDUCTOR GUIDE N°10

KEY PLAN

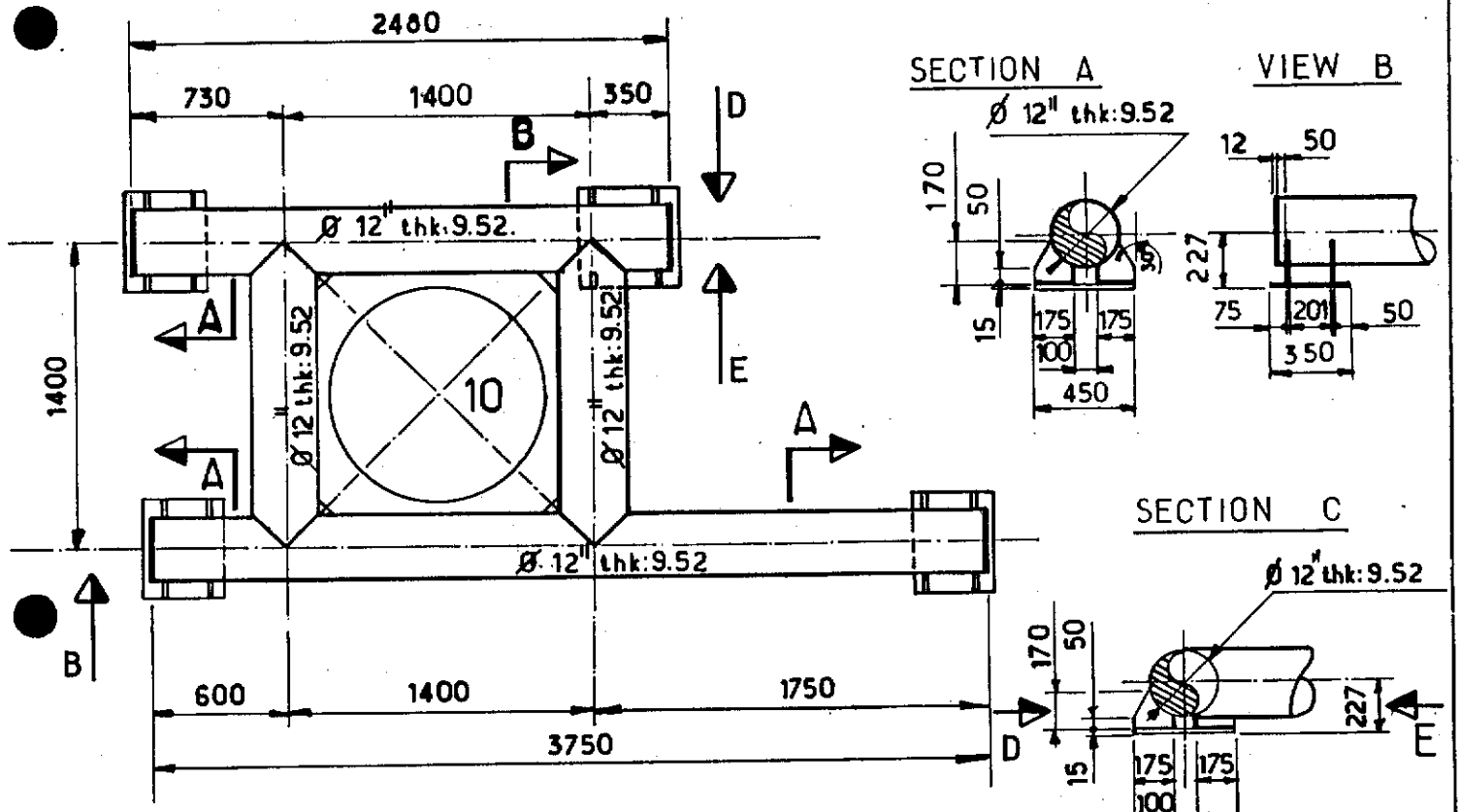

PLAN VIEW

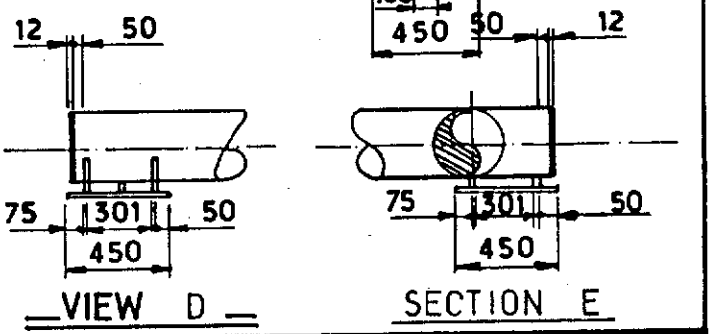

VIEW D

SECTION E

NOTES

FOR LOCATION SEE SK FF.91.36.35.1444.
FOR CONDUCTOR SLEEVE SEE SK FF.91.36.35.1491.

Rev.	Date	DESCRIPTION	by	app.
1	12.83	UP DATED	BVH	JLC

Contractor JVD 1029-40-125.

elf aquitaine norge a/s
p.o.box 168
4001 Stavanger

elf
FRIGG FIELD

Job no.	Installation	System
	CDP 1	UNDERWATER

Scale 1:33

CONDUCTOR GUIDE N° 10 CELL D
SECONDARY FRAME LEVEL D

Dwgr. no. FF.91.36.35.1455. Rev. 1 Sheet /

Form 100.318

CDP 1 AS BUILT DRAWINGS

REFERENCE DRAWING LIST FOR:

ORIGINATOR	CONSTRUCTION DRAWING REF.	TITLE	Rev	Sheet	Size
C.G. DORIS	A1. MP. QF. 1092	SECONDARY FRAME FOR	1		A1.
		RULING OF THE CONDUCTOR			
		SELEEVE ZONE D.			

ELF DRAWING NUMBER	REVISION Index	REVISION Date	TITLE

Rev.	Date	DESCRIPTION	by	app.

Contractor

elf aquitaine norge a/s
p.o.box 168
4001 Stavanger

elf
FRIGG FIELD

Job no.	Installation CDP 1	System UNDERWATER
Scale		
Dwgr. no. FF 1455	Rev.	Sheet 1

CONDUCTOR GUIDE N°11

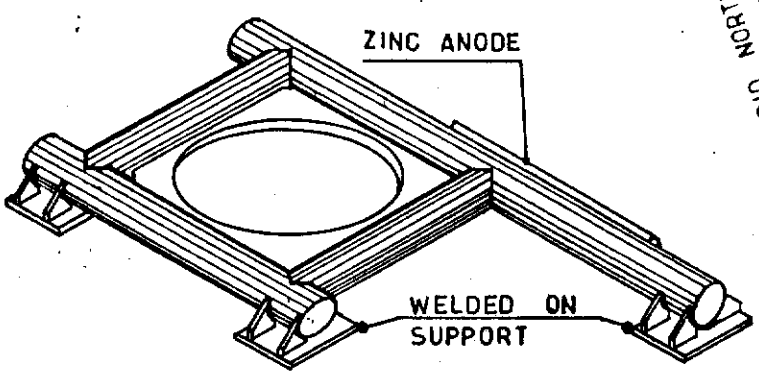

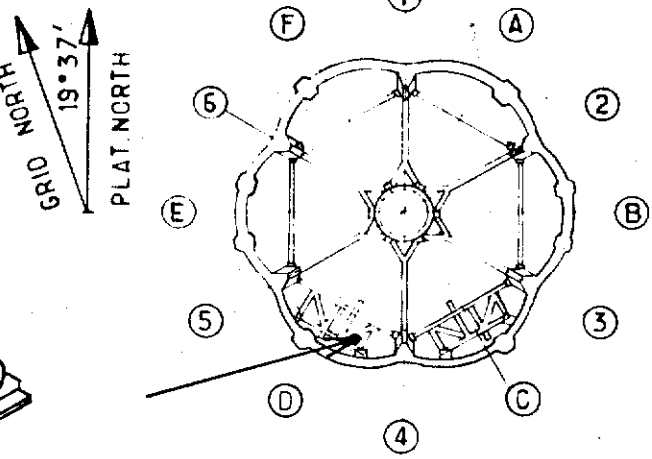

KEY PLAN

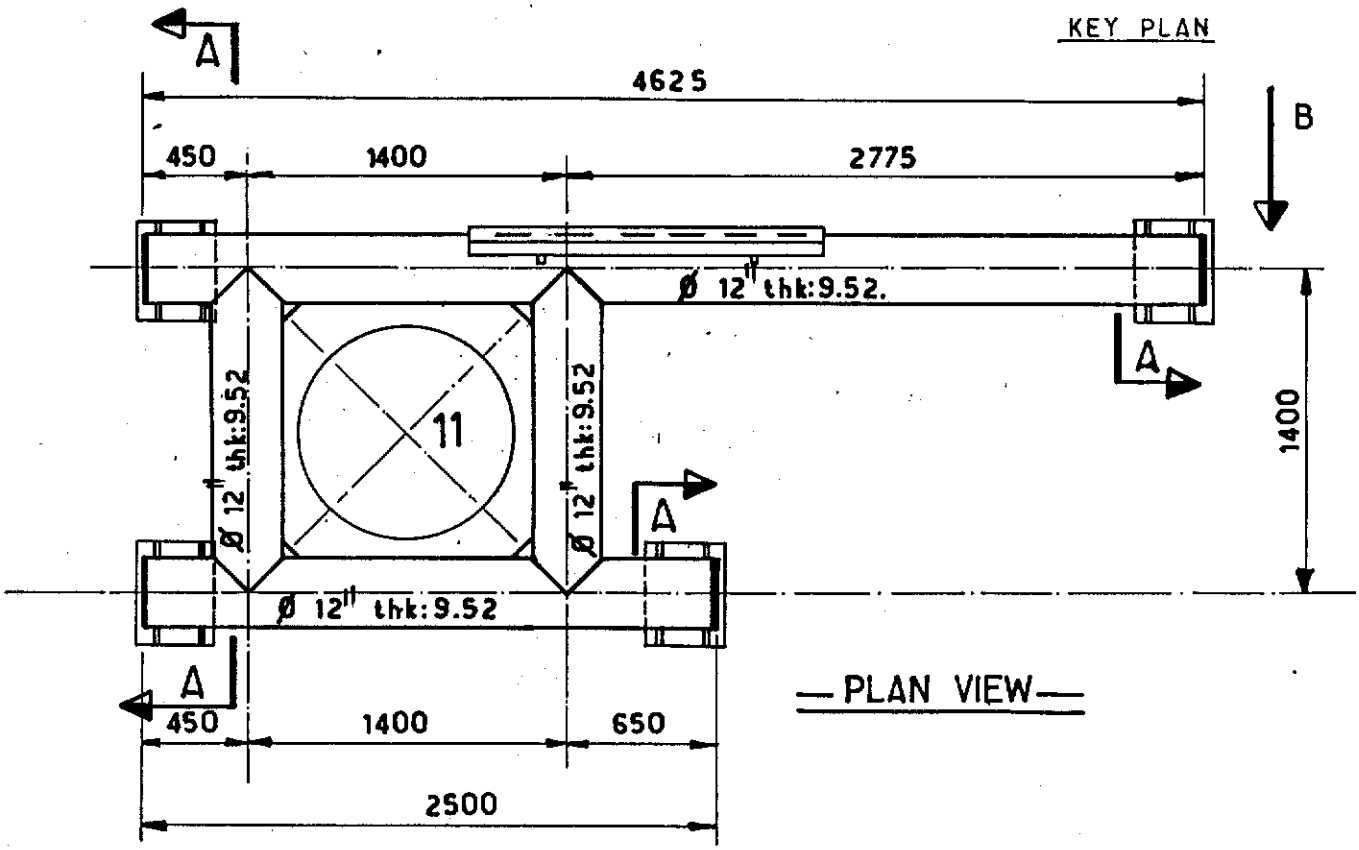

PLAN VIEW

SECTION A

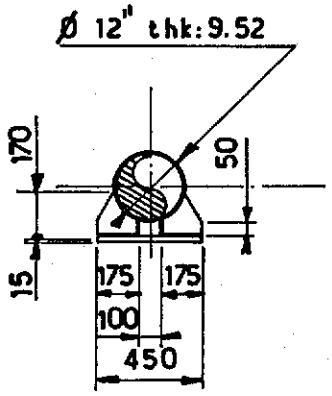

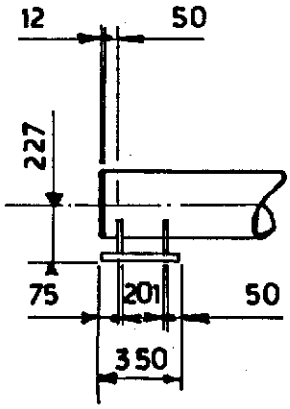

VIEW B

NOTES

FOR LOCATION SEE SK FF-91.36.35.1444

FOR CONDUCTOR SLEEVE SEE SK FF-91-36-35-1491.

FOR ZINC ANODE SEE SK. FF 91-36-35-1587

Rev.	Date	DESCRIPTION	by	app.
1	12,83	UP DATED	B.VH	JLC

Contractor JVD 1029_40_126_

elf aquitaine norge a/s
p.o.box 168
4001 Stavanger

elf
FRIGG FIELD

Job no.	Installation CDP 1	System UNDERWATER
Scale 1:33	CONDUCTOR GUIDE N°11 CELL D SECONDARY FRAME LEVEL D	
Dwgr. no. FF 91 36 35 1456	Rev. 1	Sheet

CDP 1 AS BUILT DRAWINGS

REFERENCE DRAWING LIST FOR:

ORIGINATOR	CONSTRUCTION DRAWING REF.	TITLE	Rev	Sheet	Size
C.G. DORIS	A1. MP. QF. 1093	SECONDARY FRAME FOR	1		A1.
		RULING OF THE CONDUCTORS			
		SELEEVE ZONE D.			

ELF DRAWING NUMBER	REVISION Index	REVISION Date	TITLE

Rev.	Date	DESCRIPTION	by	app.

Contractor

elf aquitaine norge a/s
p.o.box 168
4001 Stavanger

elf
FRIGG FIELD

Job no.	Installation	System
	CDP 1	UNDERWATER
Scale		
Dwgr. no. FF 1456	Rev	Sheet 1

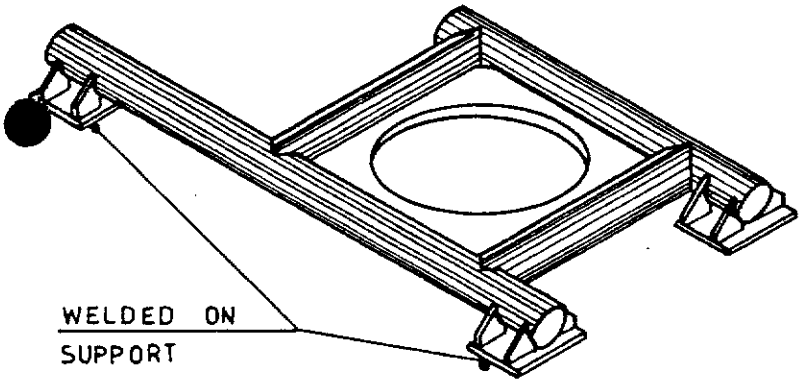

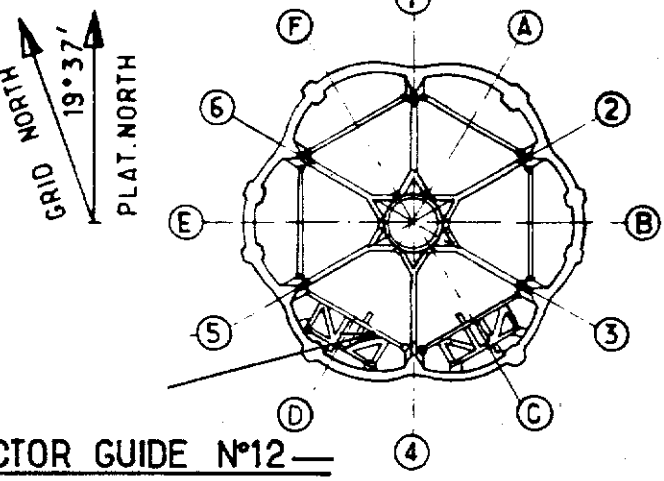

— CONDUCTOR GUIDE N°12 —

KEY PLAN

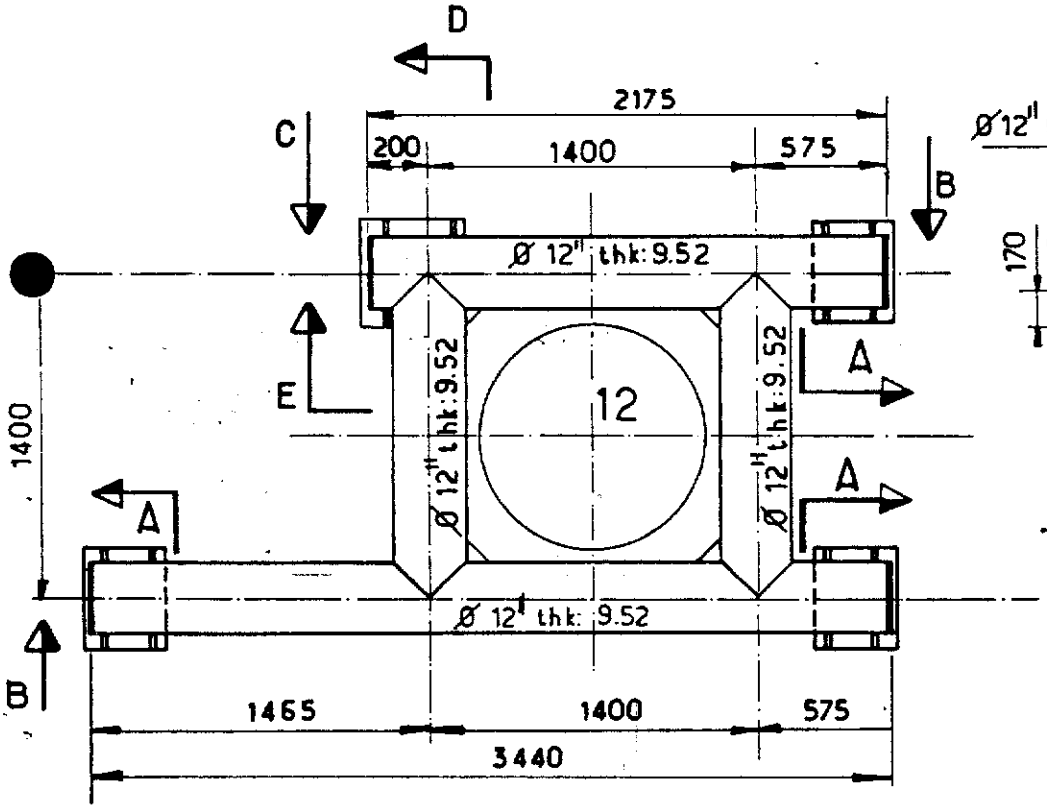

— PLAN VIEW —

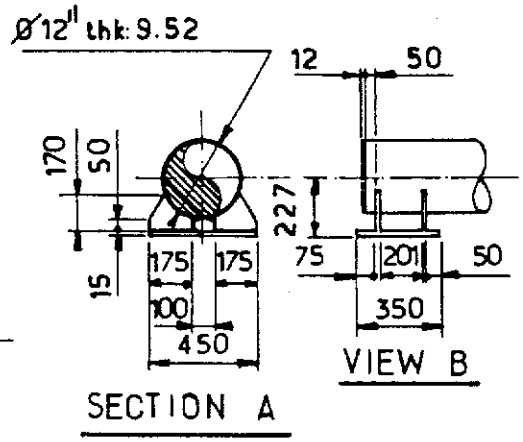

SECTION A

VIEW B

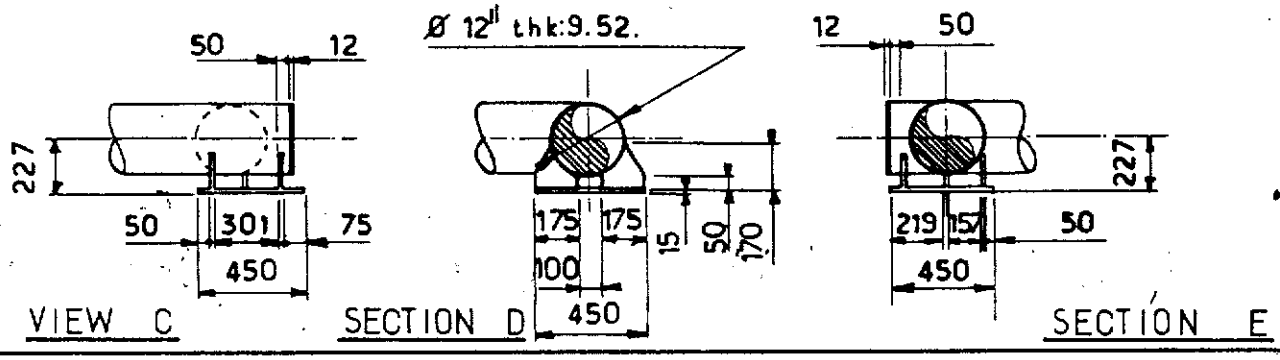

VIEW C

SECTION D

SECTION E

NOTES

FOR LOCATION SEE SK FF-91-36-35-1422

FOR CONDUCTOR SLEEVE SEE SK FF-91-36-35-1491.

Rev.	Date	DESCRIPTION	by	app.
1	1283	UP DATED	BVH	JLC

Contractor JVD 1029_40_127_

elf aquitaine norge a/s
p.o.box 168
4001 Stavanger

elf
FRIGG FIELD

Job no.	Installation	System
	CDP 1	UNDERWATER

Scale 1:33

CONDUCTOR GUIDE N°12 CELL D
SECONDARY FRAME LEVEL D

Dwgr. no. FF 91.36.35_1457 | Rev 1 | Sheet /

Form 100 318

CDP 1 AS BUILT DRAWINGS

REFERENCE DRAWING LIST FOR:

ORIGINATOR	CONSTRUCTION DRAWING REF.	TITLE	Rev	Sheet	Size
C.G. DORIS	A1. MP. QF.1091	SECONDARY FRAME FOR	1		A1.
		RULING OF THE CONDUCTORS			
		SELEEVE ZONE D.			

ELF DRAWING NUMBER	REVISION Index	REVISION Date	TITLE

Rev.	Date	DESCRIPTION	by	app.

Contractor

elf aquitaine norge a/s
p.o.box 168
4001 Stavanger

elf
FRIGG FIELD

Job no.	Installation	System
	CDP 1	UNDERWATER
Scale		
Dwgr. no. FF 1457	Rev	Sheet 1

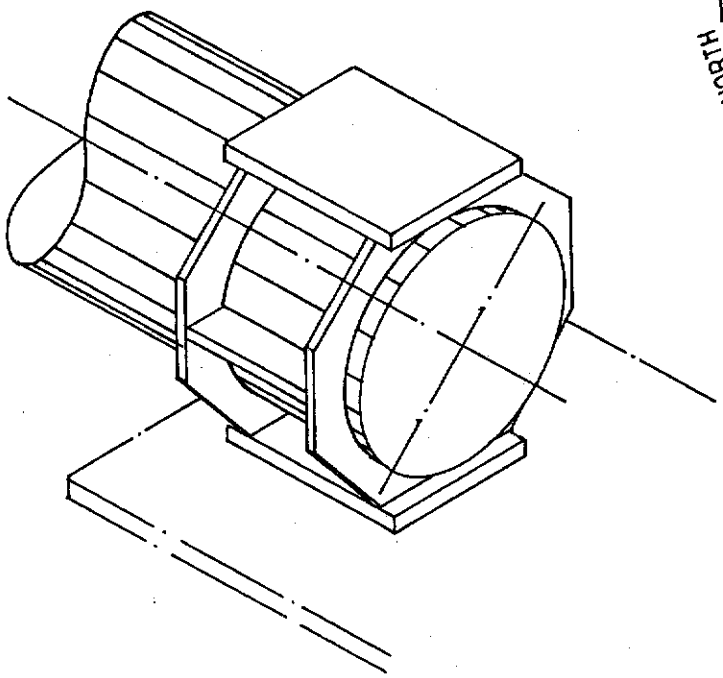

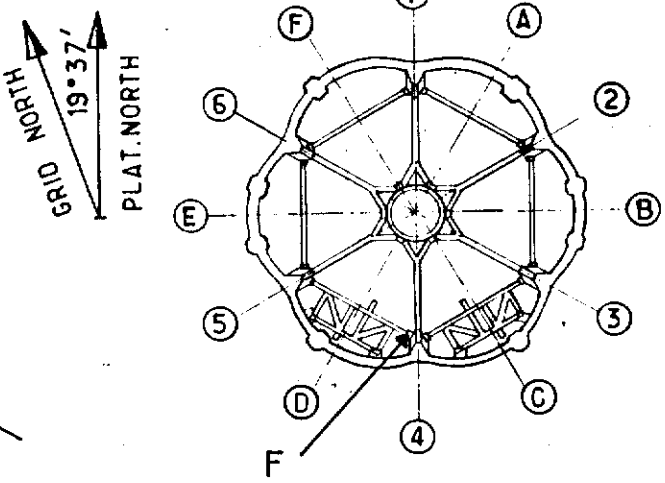

KEY PLAN

VIEW F

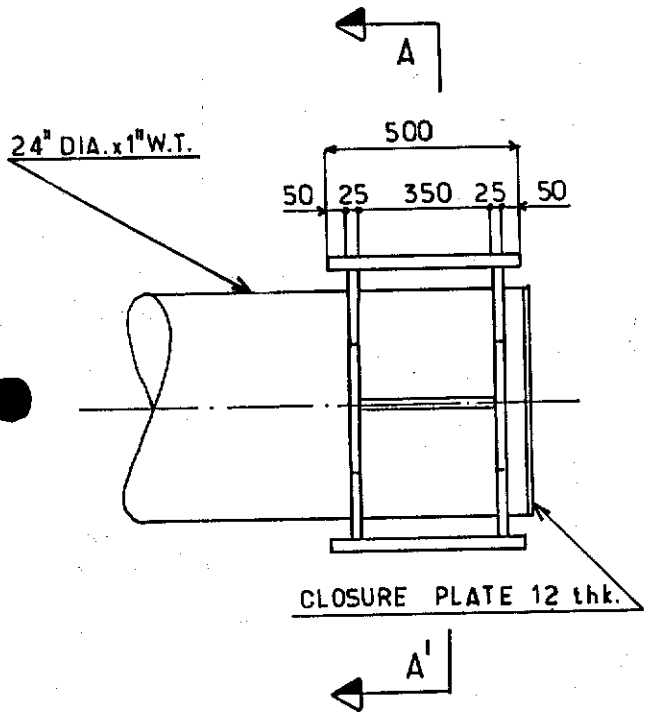

SECTION AA'

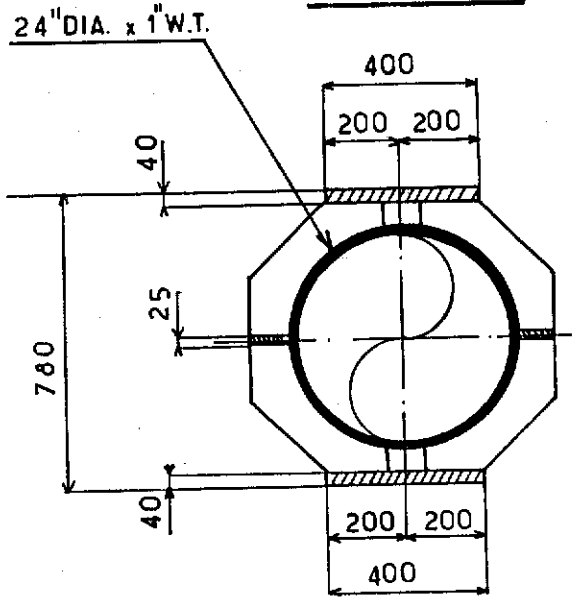

NOTES

FOR LOCATION SEE SK FF. 91. 36. 35. 1444

FOR BOX FOR FREE LOCK SEE SK FF. 91. 36. 35. 1458

Rev.	Date	DESCRIPTION	by	app.
1	12.83	UP DATED	BVH	J.C

Contractor JVD 1029. 40. 128.

elf aquitaine norge a/s
p.o.box 168
4001 Stavanger

elf
FRIGG FIELD

Job no.	Installation	System
	CDP 1	UNDERWATER

Scale 1:20

FREE LOCK PIPE END DD1
CELL D LEVEL D

Dwgr. no. FF 91·36·35·1458·

Rev 1

Sheet /

CDP 1 AS BUILT DRAWINGS

REFERENCE DRAWING LIST FOR:

ORIGINATOR	CONSTRUCTION DRAWING REF.	TITLE	Rev	Sheet	Size
C.G. DORIS	A1. MP. QF. 1185	PIPE END FOR FREE Lock	1		A1
		OF GUIDE FRAME Ø 24"			
		LEVEL D. CELL D.			

ELF DRAWING NUMBER	REVISION Index	REVISION Date	TITLE

Rev.	Date	DESCRIPTION	by	app.

Contractor

elf aquitaine norge a/s
p.o.box 168
4001 Stavanger

elf
FRIGG FIELD

Job no.	Installation	System
	CDP 1	UNDERWATER
Scale		
Dwgr. no. FF 1458	Rev.	Sheet 1

Form 100 318

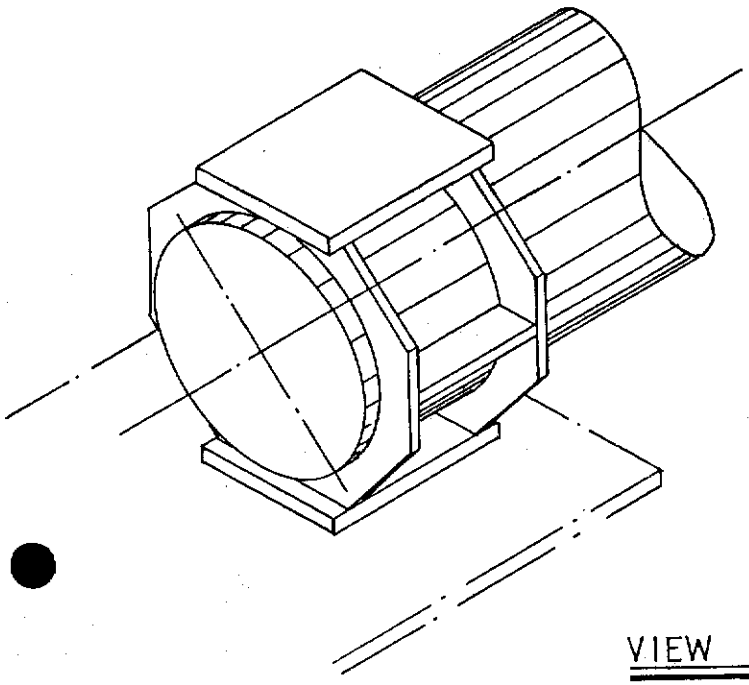

VIEW F

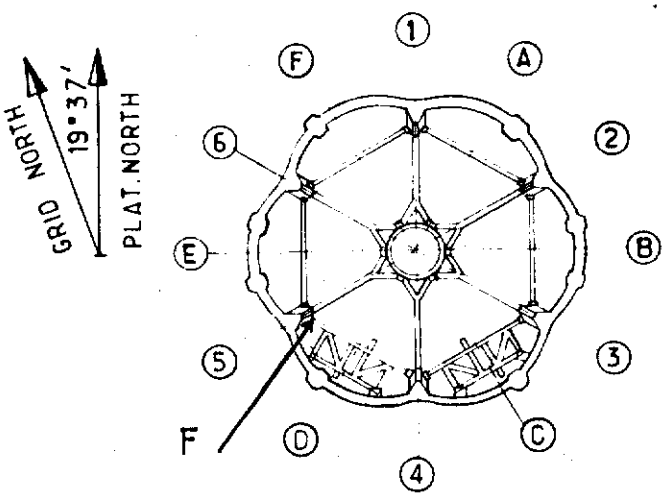

KEY PLAN

SECTION AA'

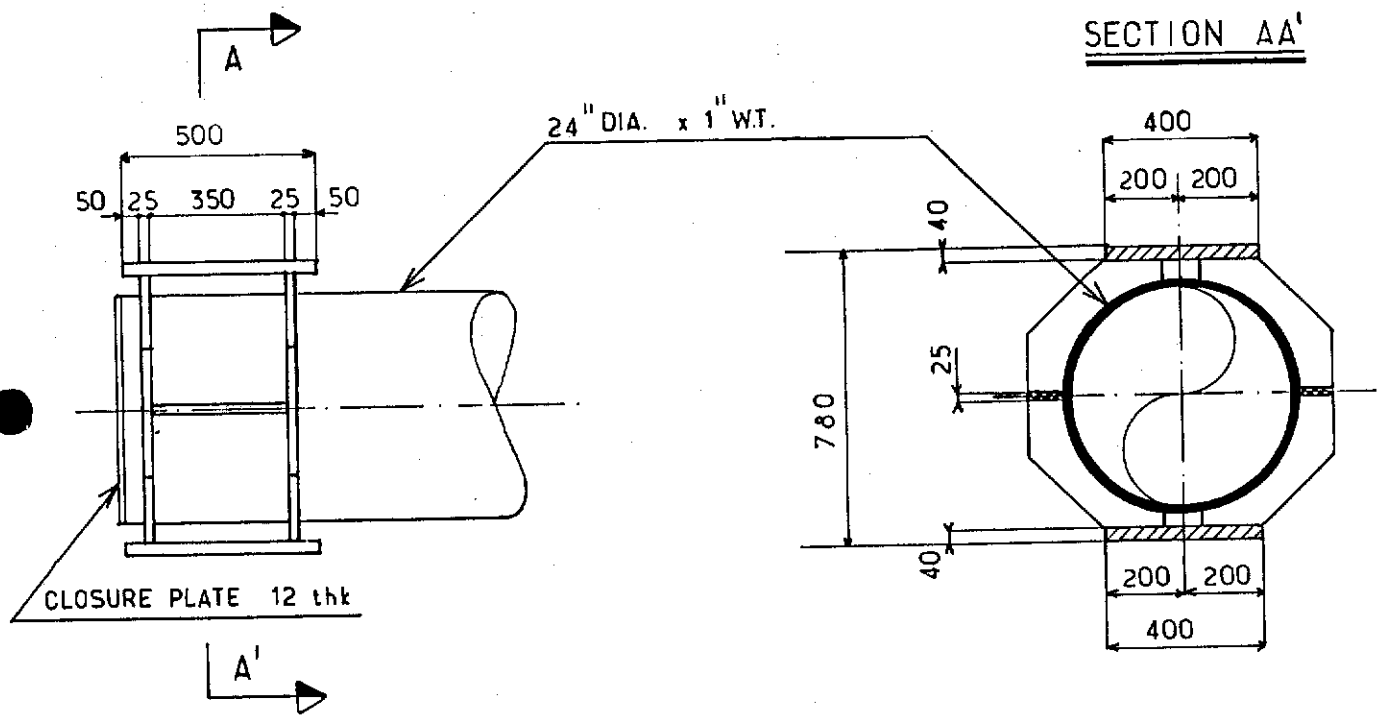

NOTES

FOR LOCATION SEE SK FF_91_36_35_1444
FOR BOX FOR FREE LOCK SEE SK FF_91_36_35_1461.

Rev.	Date	DESCRIPTION	by	app.
1	12,83	UP DATED	BVH	LLC

Contractor JVD 1029_40_129.

elf aquitaine norge a/s
p.o.box 168
4001 Stavanger

elf
FRIGG FIELD

Job no.	Installation	System
	CDP 1	UNDERWATER
Scale 1:20	FREE LOCK PIPE END DD4 CELL D LEVEL D	
Dwgr. no FF 91·36·35·1459	No. 1	Sheet /

CDP 1 AS BUILT DRAWINGS

REFERENCE DRAWING LIST FOR:

ORIGINATOR	CONSTRUCTION DRAWING REF.	TITLE	Rev	Sheet	Size
C.G. DORIS	A1. MP. QF. 1185	PIPE END FOR FREE LOCK	1		A1
		OF GUIDE FRAME Ø 24"			
		LEVEL D. CELL D.			

ELF DRAWING NUMBER	REVISION Index	REVISION Date	TITLE

Rev.	Date	DESCRIPTION	by	app.

Contractor

elf aquitaine norge a/s
p.o.box 168
4001 Stavanger

elf

FRIGG FIELD

Job no.	Installation	System
	CDP 1	UNDERWATER
Scale		
Dwgr. no. FF 1459	Rev	Sheet 1

Form 100 318

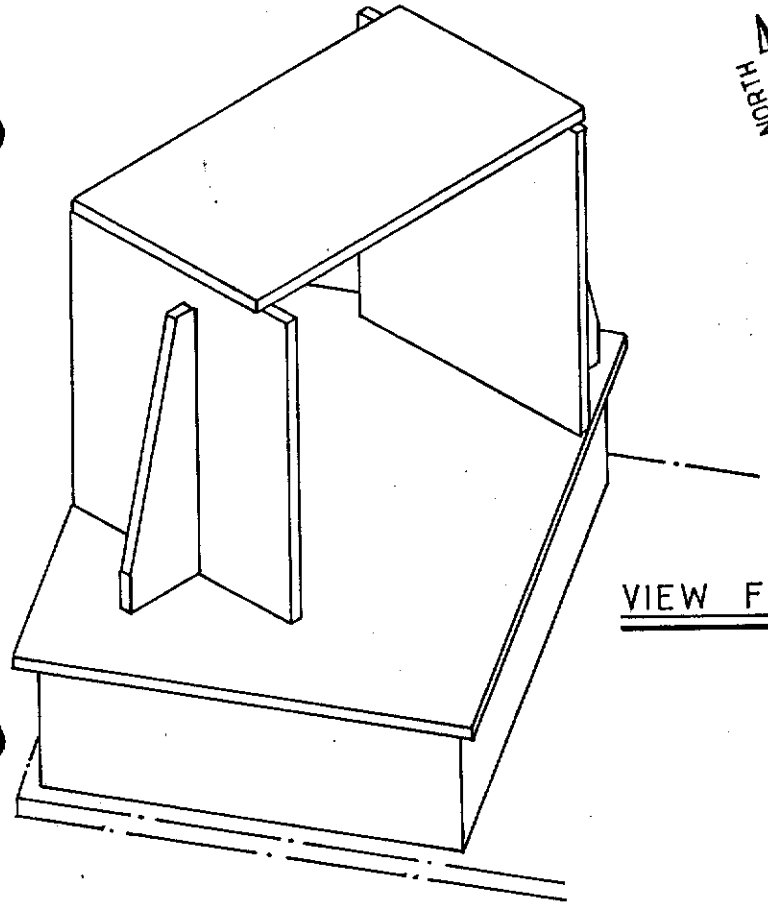

VIEW F

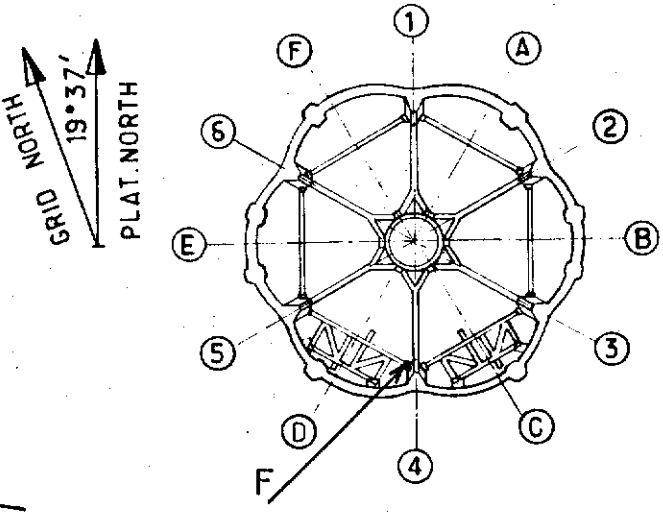

KEY PLAN

A

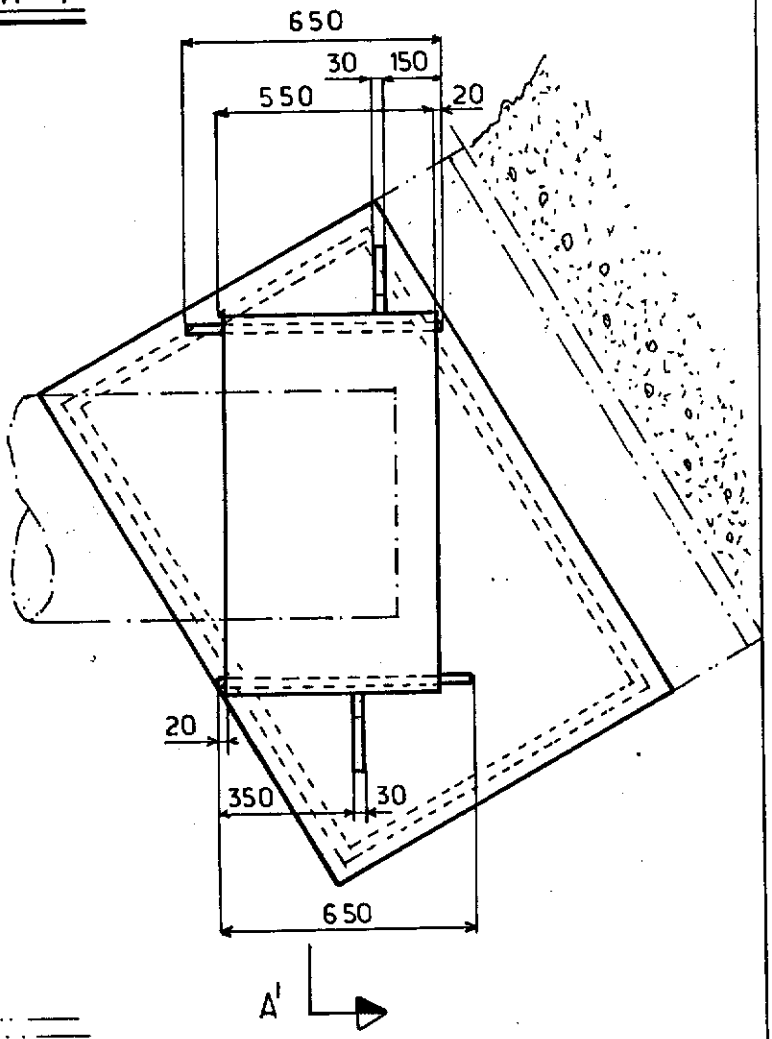

SECTION AA'

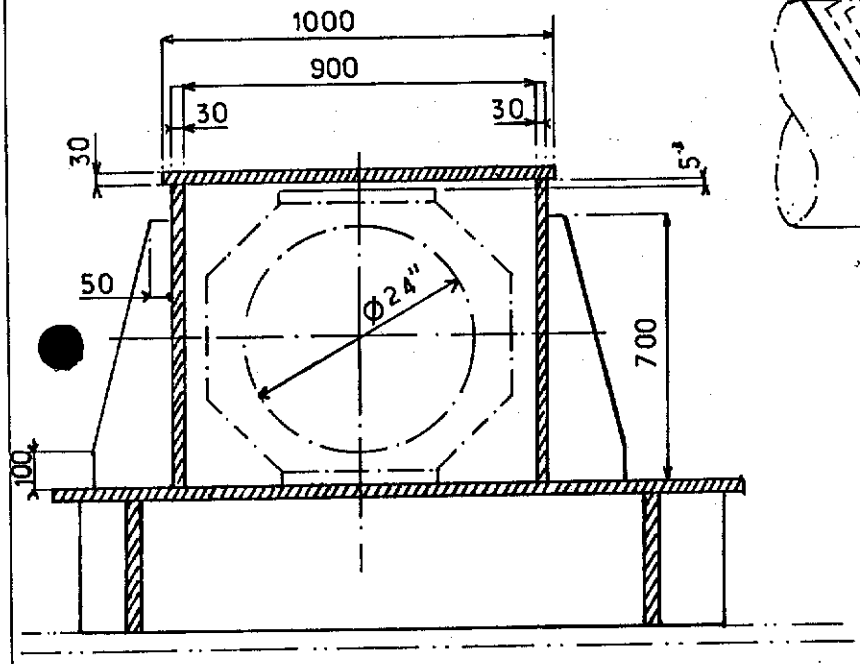

NOTES

FOR LOCATION SEE SK FF 91_36_35.1444.

FOR DETAIL OF FREE LOCK PIPE END SEE SK FF_91.36_35.1458.

Rev.	Date	DESCRIPTION	by	app.
1	12.83	UP DATED	B.V.H	JLC

Contractor JVD 1029_40.130

elf aquitaine norge a/s
p.o.box 168
4001 Stavanger

elf
FRIGG FIELD

Job no.	Installation	System
	CDP 1	UNDERWATER
Scale 1:20	BOX FOR FREE LOCK DD1 CELL D LEVEL D	
Dwgr. no. FF 91·36·35·1460	Rev 1	Sheet /

CDP 1 AS BUILT DRAWINGS

REFERENCE DRAWING LIST FOR:

ORIGINATOR	CONSTRUCTION DRAWING REF.	TITLE	Rev	Sheet	Size
- C G. DORIS.	A1. MP. QF. 12.41	BOX FOR FREE LOCK.	1		A1
		ZONE D . LEVEL D .			

ELF DRAWING NUMBER	REVISION Index	REVISION Date	TITLE

Rev.	Date	DESCRIPTION	by	app.

Contractor

elf aquitaine norge a/s
p.o.box 168
4001 Stavanger

elf

FRIGG FIELD

Job no.	Installation	System
	CDP 1	UNDERWATER
Scale	BOXE FOR FREE LOCK DD1	
Dwgr. no. FF 1460	Rev.	Sheet /

Form 100 318

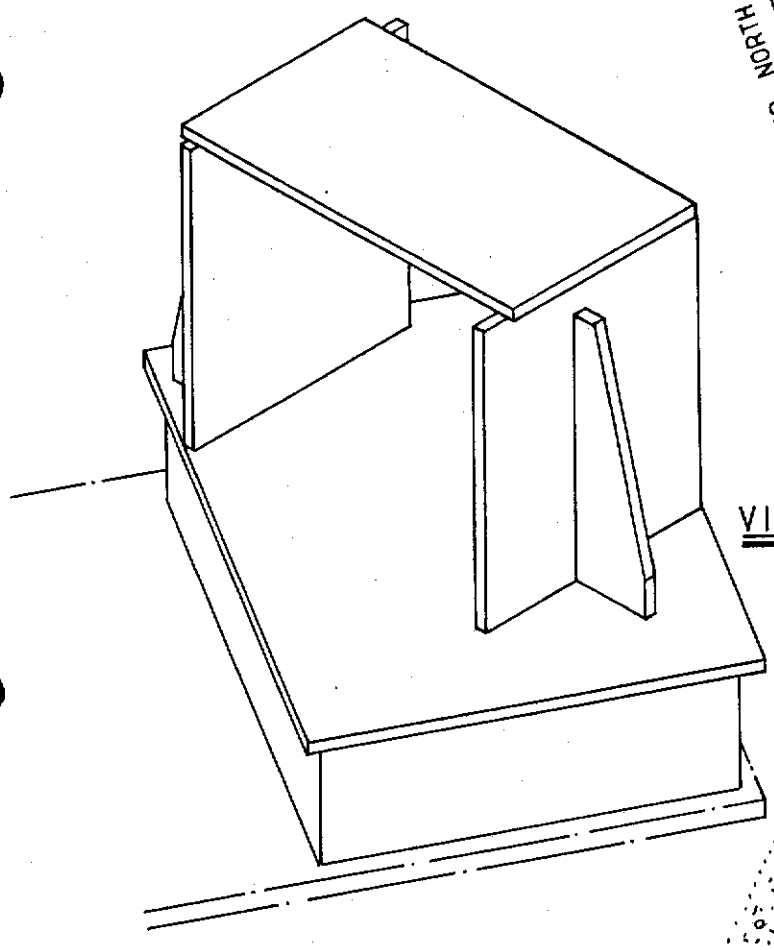

VIEW F

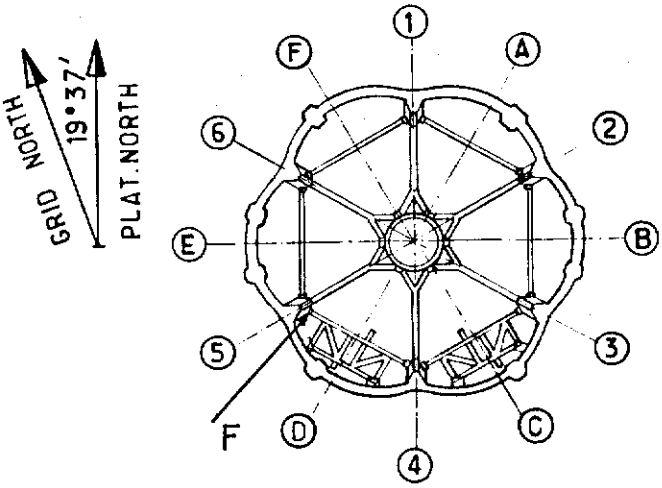

KEY PLAN

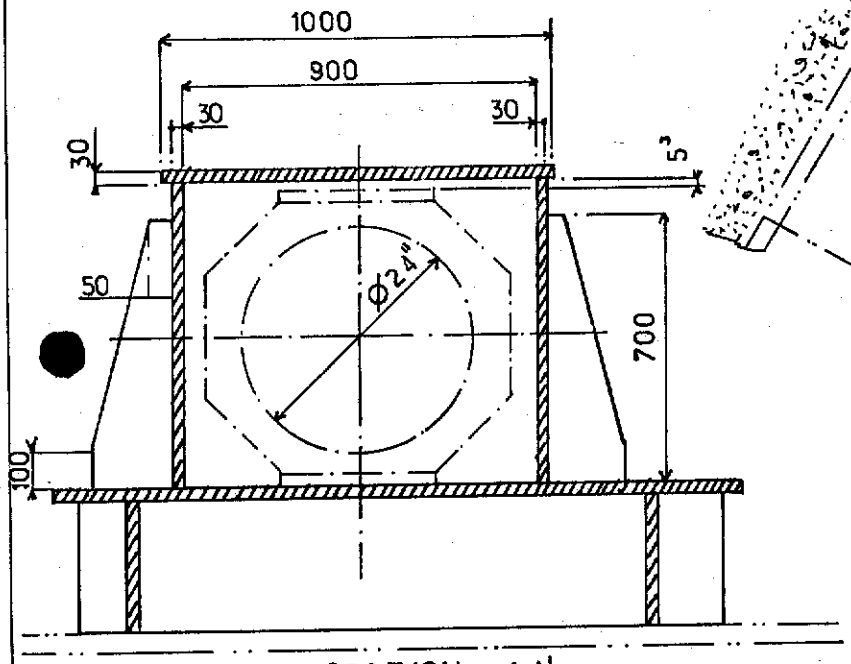

SECTION AA'

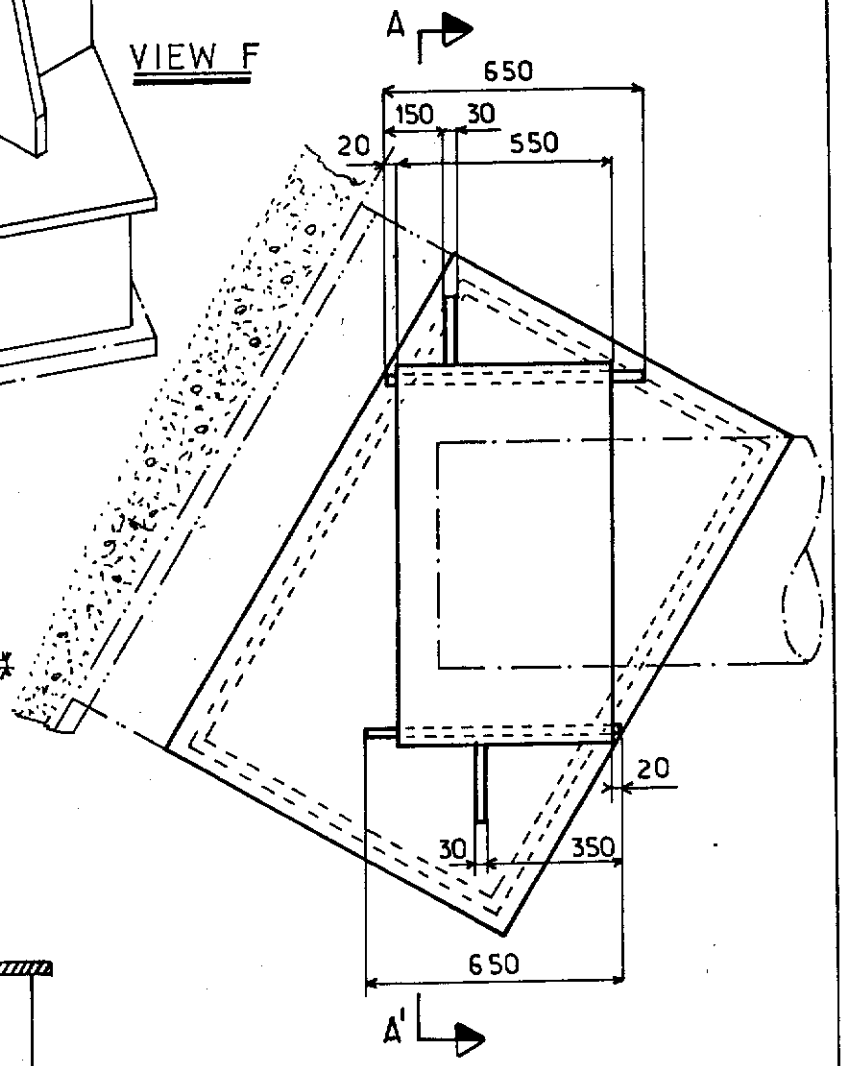

NOTES

FOR LOCATION SEE SK FF_91_36_35_1444.

FOR DETAIL OF FREE LOCK PIPE END SEE SK FF_91_36_35_1459.

Rev.	Date	DESCRIPTION	by	app.
1	12.83	UP DATED	BVH	J.LC

Contractor JVD 1029_40_131.

elf aquitaine norge a/s
p.o.box 168
4001 Stavanger

elf
FRIGG FIELD

Job no.	Installation	System
	CDP 1	UNDERWATER
Scale 1:20	BOX FOR FREE LOCK DD4 CELL D LEVEL D	
Dwgr. no. FF 91·36·35·1461	Rev 1	Sheet /

Form 100 318

CDP 1 AS BUILT DRAWINGS

REFERENCE DRAWING LIST FOR:

ORIGINATOR	CONSTRUCTION DRAWING REF.	TITLE	Rev	Sheet	Size
- C G. DORIS.	A1. MP. QF. 1241.	BOX FOR FREE LOCK.	1		A1
		ZONE D. LEVEL D.			

ELF DRAWING NUMBER	REVISION Index	REVISION Date	TITLE

Rev.	Date	DESCRIPTION	by	app.

Contractor

elf aquitaine norge a/s
p.o.box 168
4001 Stavanger

elf
FRIGG FIELD

Job no.	Installation CDP 1	System UNDERWATER
Scale	BOXE FOR FREE LOCK DD4	
Dwgr. no. FF 1461	Rev.	Sheet /

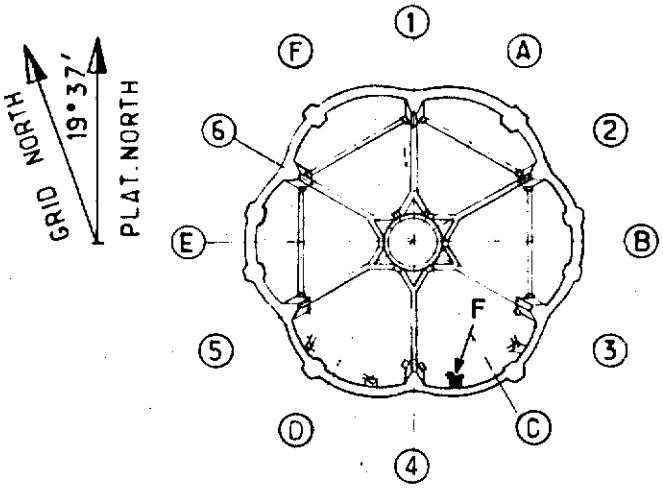

KEY PLAN

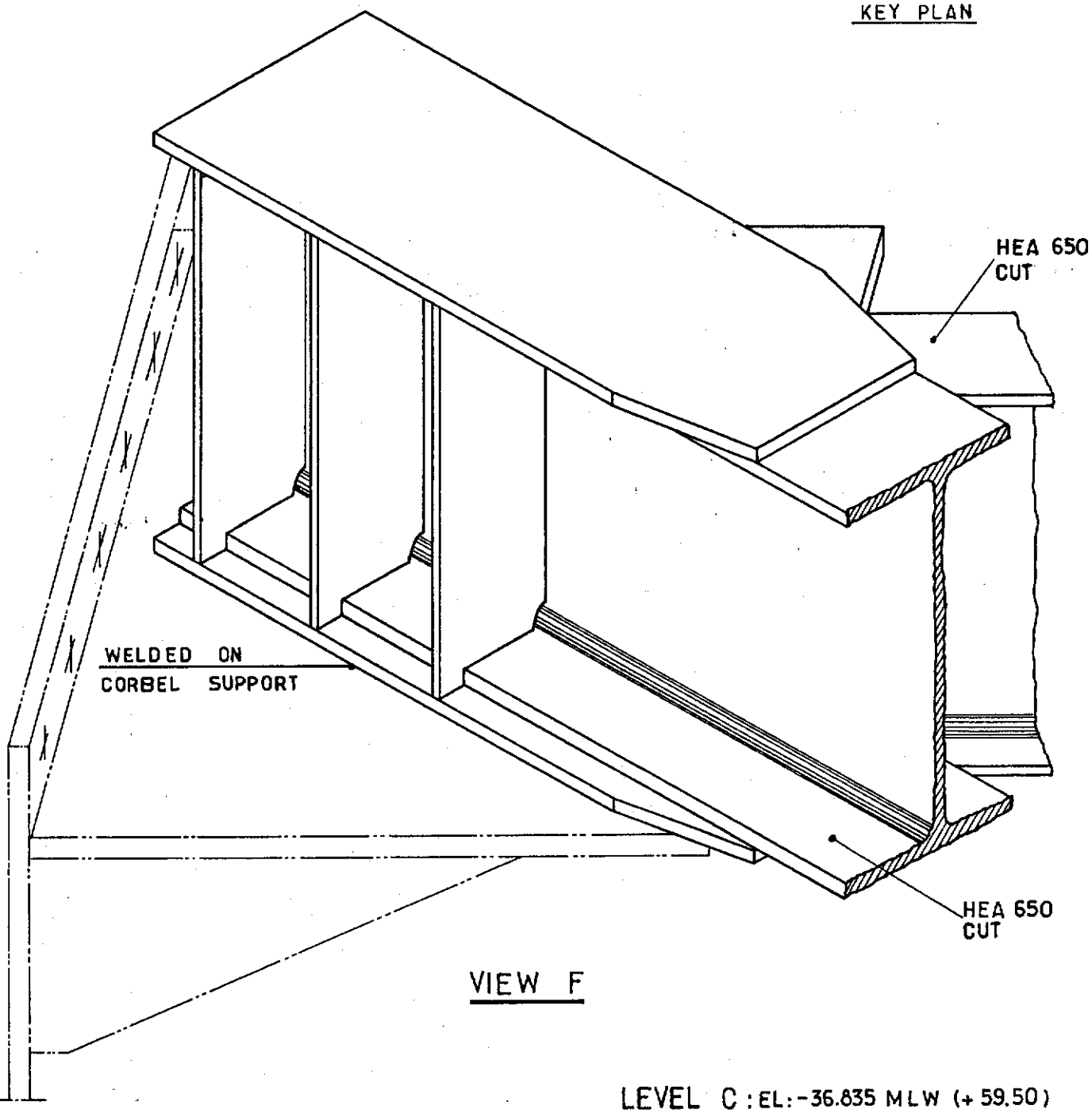

VIEW F

LEVEL C : EL: -36.835 MLW (+ 59.50)

Rev.	Date	DESCRIPTION	by	app.
1	12.83	UP DATED	BVH	JLC

Contractor JVD 1029 40_136

elf aquitaine norge a/s
p.o.box 168
4001 Stavanger

elf
FRIGG FIELD

Job no.	Installation	System
	CDP 1	UNDERWATER
Scale —	REMAINING PART OF CONDUCTOR GUIDE FRAME ON CORBEL C2 IN CELL C	
Dwgr. no. FF_91_36_35_1466_	Rev. 1	Sheet —

CDP 1 AS BUILT DRAWINGS

REFERENCE DRAWING LIST FOR: CONDUCTOR GUIDE FRAME

ORIGINATOR	CONSTRUCTION DRAWING REF.	TITLE	Rev	Sheet	Size
C.G. DORIS	AO.MP.QF 1046	GUIDE FRAMES IN PROFILED CB AND CC	5		A0
" "	AO.MP.QF 1048	GUIDE FRAMES IN PROFILED GENERAL ARRANGEMENT	5		A0

ELF DRAWING NUMBER	REVISION Index	REVISION Date	TITLE
FF 91.36.35.10.31 SHEETS 1/4 TO 4/4	0		REMOVAL OF TEMPORARY CONDUCTOR GUIDE FRAME CELL C LEVEL C

Rev.	Date	DESCRIPTION	by	app.

Contractor

elf aquitaine norge a/s
p.o.box 168
4001 Stavanger

elf

FRIGG FIELD

Job no.	Installation	System
	CDP 1	UNDERWATER
Scale		
Dwgr. no. FF ___ ___ 1466	Rev.	Sheet /

Form 100 318

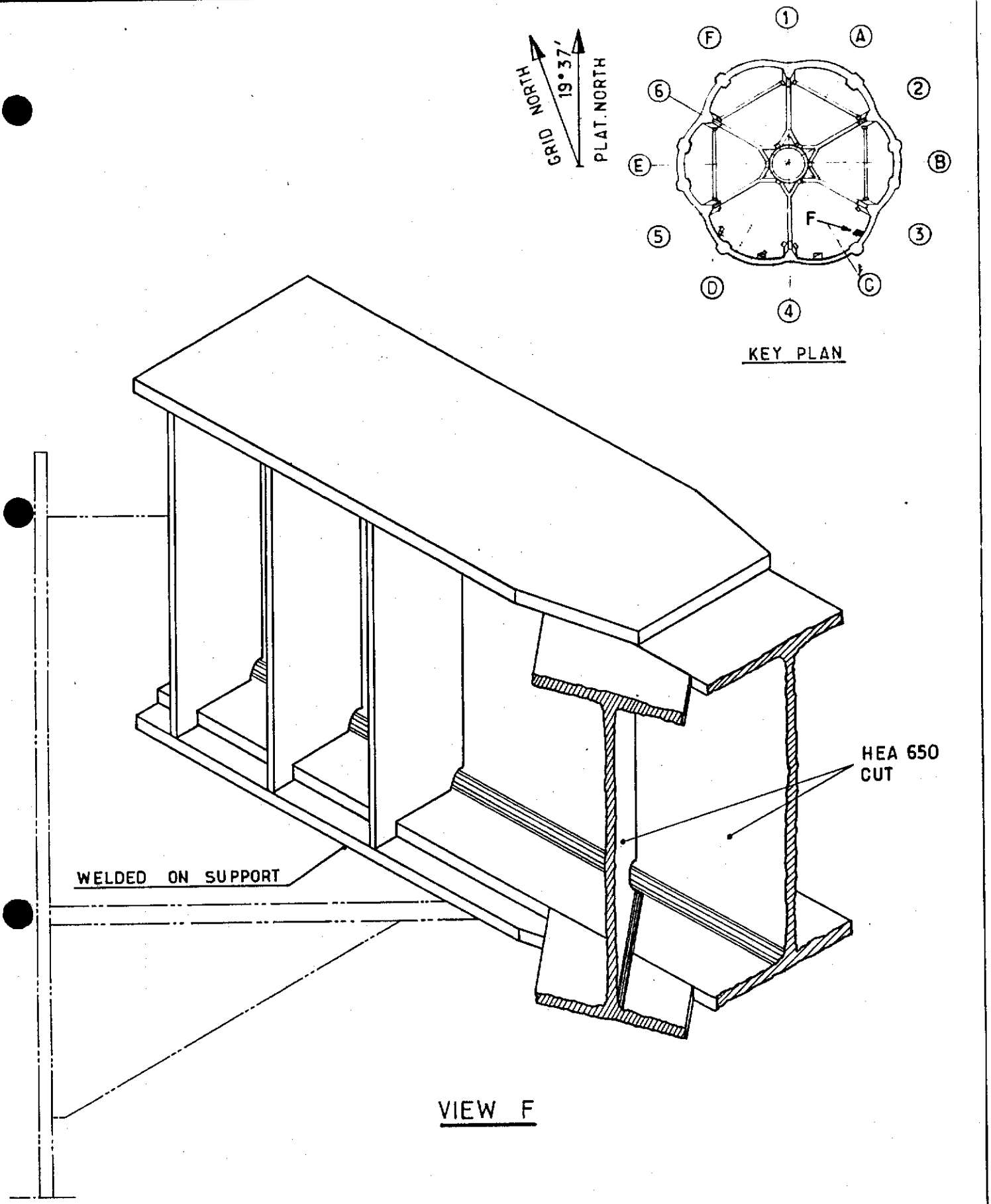

LEVEL C : EL: -36.835 MLW (+59.50)

Rev.	Date	DESCRIPTION	by	app.
1	12.83	UP DATED	B.V.H	J.L.C

Contractor JVD 1029 40_137

elf aquitaine norge a/s
p.o.box 168
4001 Stavanger

elf
FRIGG FIELD

Job no.	Installation	System
	CDP 1	UNDERWATER
Scale —	REMAINING PART OF CONDUCTOR GUIDE FRAME ON CORBEL C3 IN CELL C	
Dwgr. no. FF. 91. 36-35 - 1467-	Rev. 1	Sheet —

CDP 1 AS BUILT DRAWINGS

REFERENCE DRAWING LIST FOR: CONDUCTOR GUIDE FRAME

ORIGINATOR	CONSTRUCTION DRAWING REF.	TITLE	Rev	Sheet	Size
C.G. DORIS	AO.MP.QF 1046	GUIDE FRAMES IN PROFILED CB AND CC	5		A0
" "	AO.MP.QF 1048	GUIDE FRAMES IN PROFILED GENERAL ARRANGEMENT	5		A0

ELF DRAWING NUMBER	REVISION Index	REVISION Date	TITLE
FF 91-3635.10.31 SHEETS 1/4 TO 4/4	0		REMOVAL OF TEMPORARY CONDUCTOR GUIDE FRAME CELL C LEVEL C

Rev.	Date	DESCRIPTION	by	app.

Contractor

elf aquitaine norge a/s
p.o.box 168
4001 Stavanger

elf

FRIGG FIELD

Job no.	Installation	System
	CDP 1	UNDERWATER
Scale		
Dwgr. no. FF ___ ___ 1467	Rev.	Sheet 1

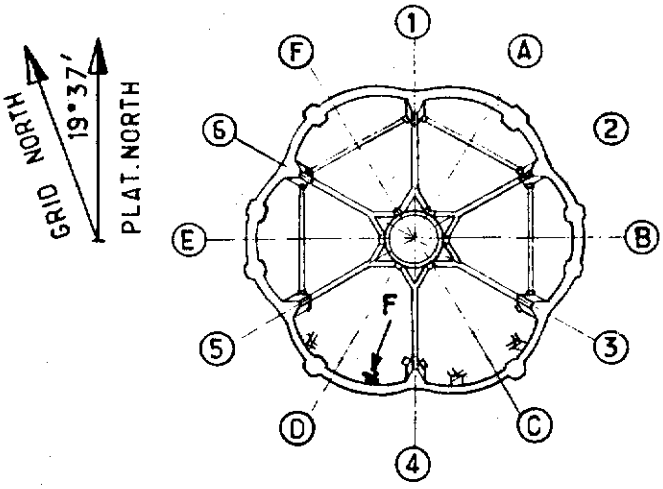

KEY PLAN

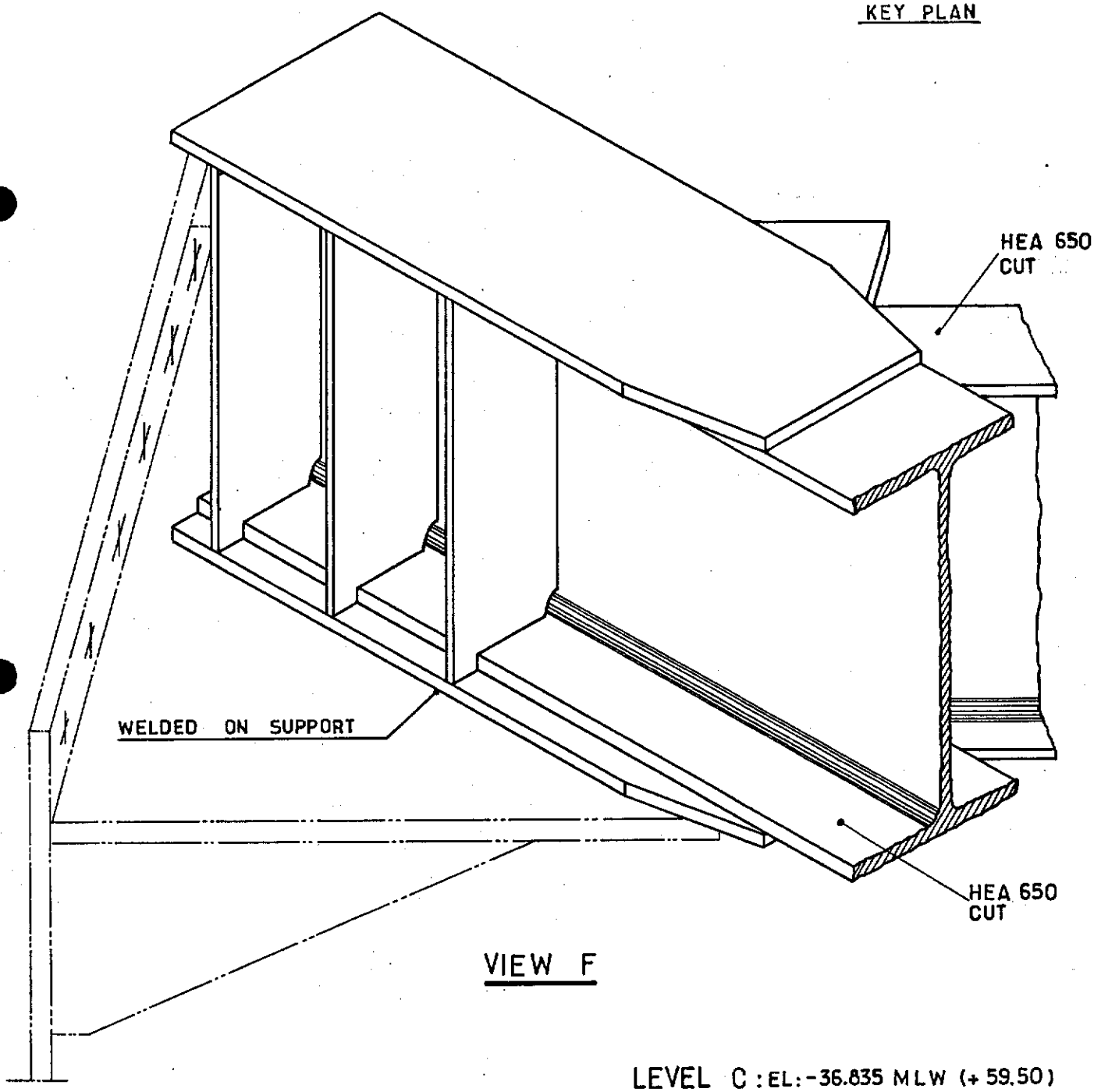

VIEW F

LEVEL C : EL: -36.835 MLW (+ 59.50)

Rev.	Date	DESCRIPTION	by	app.
1	12.83	UP DATED	B.V.H	J.C

Contractor JVD 1029 40_138

elf aquitaine norge a/s
p.o.box 168
4001 Stavanger

elf
FRIGG FIELD

Job no.	Installation	System
	CDP 1	UNDERWATER
Scale —	REMAINING PART OF CONDUCTOR GUIDE FRAME ON CORBEL D2 IN CELL C	
Dwgr. no. FF. 91.36.35.1468.	Rev 1	Sheet —

Form 100 318

CDP 1 AS BUILT DRAWINGS

REFERENCE DRAWING LIST FOR: CONDUCTOR GUIDE FRAME

ORIGINATOR	CONSTRUCTION DRAWING REF.	TITLE	Rev	Sheet	Size
C.G. DORIS	AO. MP QF 1047	GUIDE FRAMES IN PROFILED DB AND DC	5		AO
" "	AO. MP. QF. 1049	GUIDE FRAMES IN PROFILED GENERAL ARRANGEMENT	5		AO

ELF DRAWING NUMBER	REVISION Index	REVISION Date	TITLE
FF. 91-36-35-10-32	0		REMOVAL OF TEMPORARY CONDUCTOR GUIDE FRAME CELL D LEVEL C

Rev.	Date	DESCRIPTION	by	app.

Contractor

elf aquitaine norge a/s
p.o.box 168
4001 Stavanger

elf
FRIGG FIELD

Job no.	Installation	System
	CDP 1	UNDERWATER
Scale		
Dwgr. no. FF ___ ___ 1468	Rev.	Sheet /

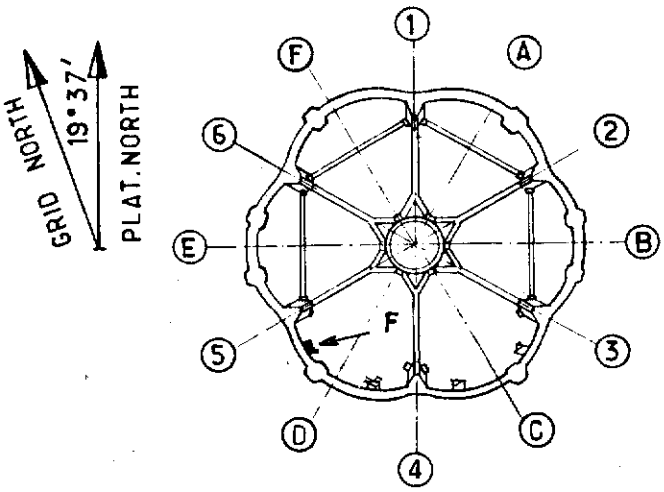

KEY PLAN

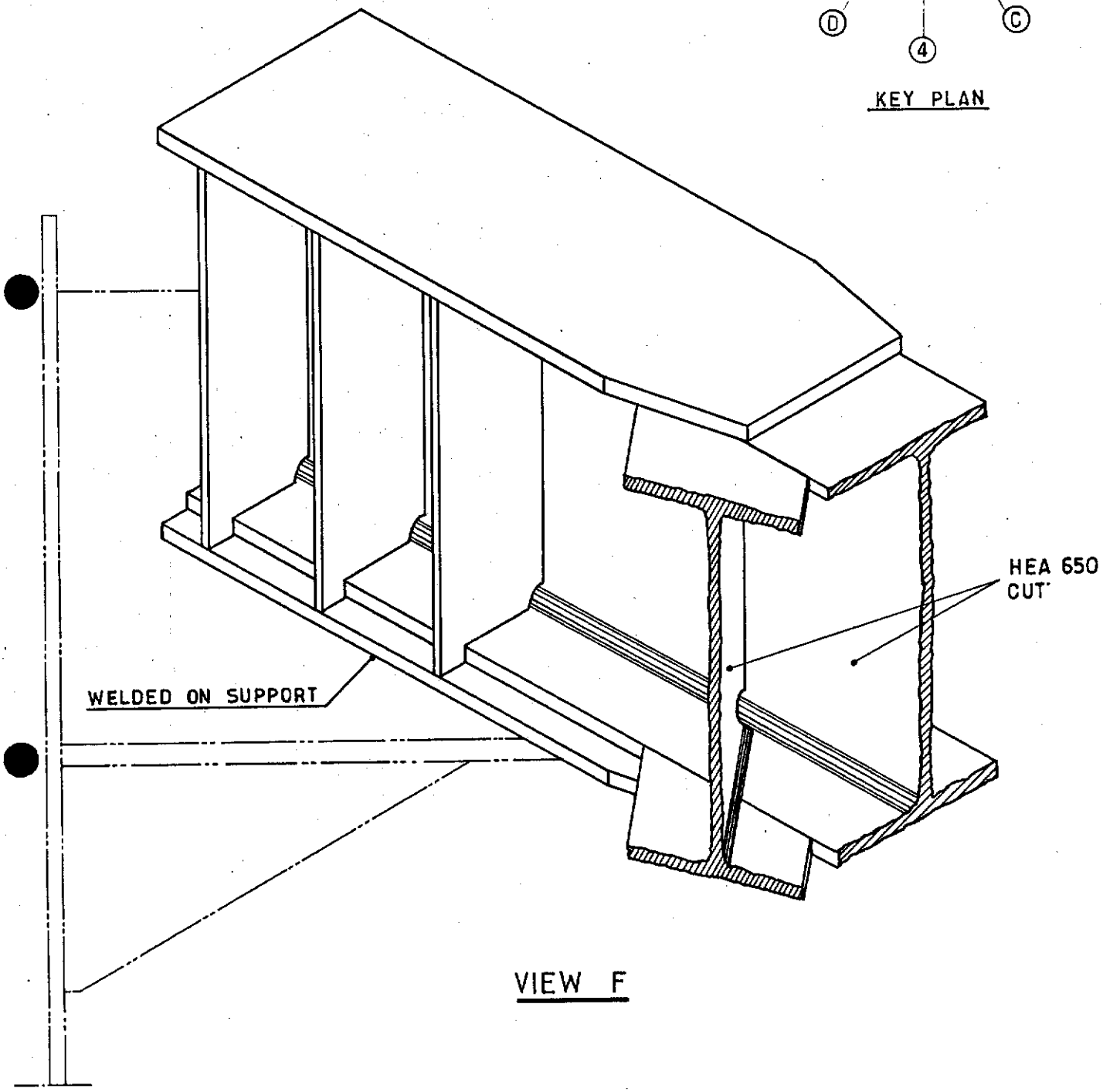

VIEW F

LEVEL C: EL: -36.835 MLW (+59.50)

Rev.	Date	DESCRIPTION	by	app.
1	12.83	UP DATED	BVH	J.LC

Contractor JVD 1029 _ 40_139

elf aquitaine norge a/s
p.o.box 168
4001 Stavanger

elf
FRIGG FIELD

Job no.	Installation	System
	CDP 1	UNDERWATER
Scale	REMAINING PART OF CONDUCTOR GUIDE FRAME ON CORBEL D3 IN CELL C	
Dwgr. no. FF-91-36-35-1469-	Rev 1	Sheet

Form 100.318

CDP 1 AS BUILT DRAWINGS

REFERENCE DRAWING LIST FOR: CONDUCTOR GUIDE FRAME

ORIGINATOR	CONSTRUCTION DRAWING REF.	TITLE	Rev	Sheet	Size
C.G. DORIS	AO. MP QF 1047	GUIDE FRAMES IN PROFILED DB AND DC	5		AO
" "	AO. MP. QF. 1049	GUIDE FRAMES IN PROFILED GENERAL ARRANGEMENT	5		AO

ELF DRAWING NUMBER	REVISION Index	REVISION Date	TITLE
FF. 91-36-35-10-32	0		REMOVAL OF TEMPORARY CONDUCTOR GUIDE FRAME CELL D LEVEL C

Rev.	Date	DESCRIPTION	by	app.

Contractor

elf aquitaine norge a/s
p.o.box 168
4001 Stavanger

elf
FRIGG FIELD

Job no.	Installation	System
	CDP 1	UNDERWATER
Scale		
Dwgr. no. FF 1469	Rev.	Sheet /

Form 100.318

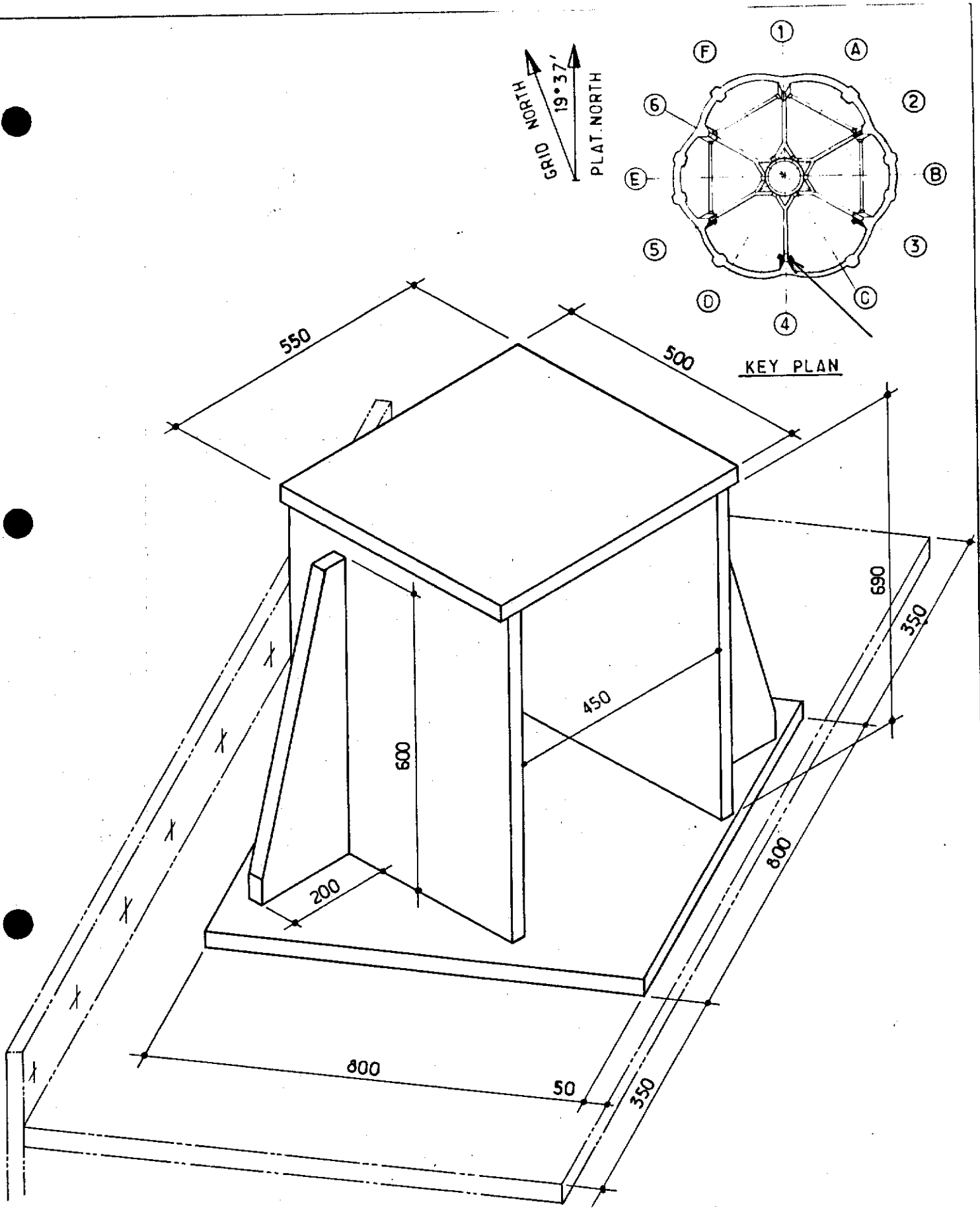

NOTES

ALL PLATES 30 mm thk.

LEVEL C : EL: -36,835 MLW (+59,500)

Rev.	Date	DESCRIPTION	by	app.
1	12.83	UP DATED	BVH	J.LC

Contractor JVD 1029_40_140.

elf aquitaine norge a/s
p.o.box 168
4001 Stavanger

elf
FRIGG FIELD

Job no.	Installation	System
	CDP 1	UNDERWATER

Scale 1/10 °

REMAINING PART OF GUIDE BOX
CC 1
CELL C LEVEL C

Dwgr. no. FF_91_36_35_1470

Rev. 1

Sheet /

CDP 1 AS BUILT DRAWINGS

REFERENCE DRAWING LIST FOR: CONDUCTOR GUIDE FRAMES

ORIGINATOR	CONSTRUCTION DRAWING REF.	TITLE	Rev	Sheet	Size
C.G DORIS	A1-MP-QF 1219	FREE LOCK DETAIL	3		A1

ELF DRAWING NUMBER	REVISION Index	REVISION Date	TITLE
SUB SEA TASK 1122 A		31-8-82	CELL C + PHOTOGRAPHIC REPORT (SLIDES)
SUB SEA TASK 1122 B		24-9-82	CELL D + PHOTOGRAPHIC REPORT (SLIDES)

Rev.	Date	DESCRIPTION	by	app.

Contractor

elf aquitaine norge a/s
p.o.box 168
4001 Stavanger

elf

FRIGG FIELD

Job no.	Installation	System
	CDP 1	UNDERWATER
Scale		
Dwgr. no. FF 1470	Rev.	Sheet /

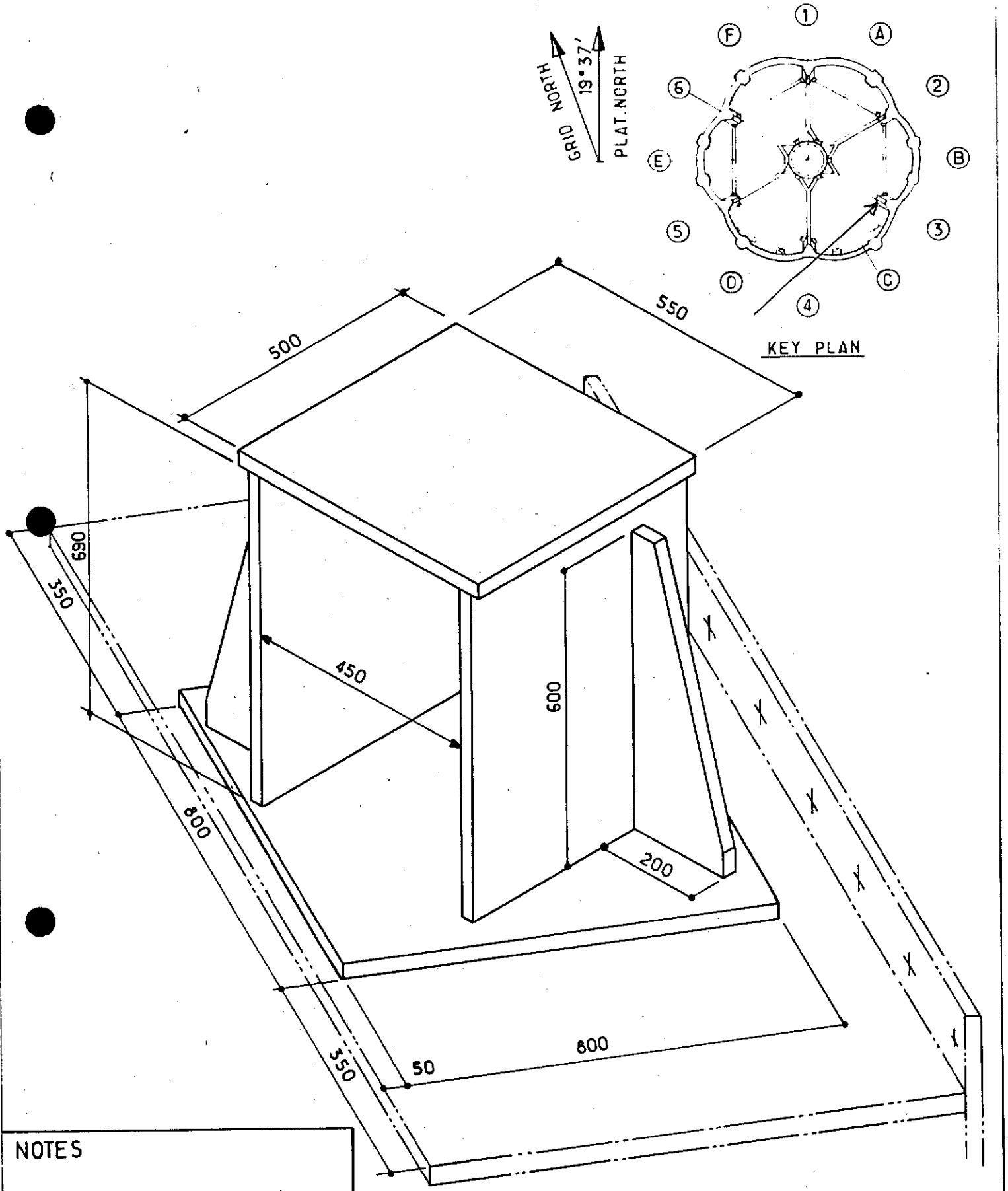

NOTES

ALL PLATES 30 mm thk.

LEVEL C. EL:-36,835 MLW (+ 59,500)

Rev.	Date	DESCRIPTION	by	app.
1	12.83	UP DATED	B.V.H	J.L.C

Contractor JVD 1029.40.141

elf aquitaine norge a/s
p.o.box 168
4001 Stavanger

elf
FRIGG FIELD

Job no.	Installation	System
	CDP 1	UNDERWATER

Scale 1/10°

REMAINING PART OF GUIDE BOX CC4
CELL C LEVEL C

Dwgr. no FF 91·36·35·1471

1

CDP 1 AS BUILT DRAWINGS

REFERENCE DRAWING LIST FOR: CONDUCTOR GUIDE FRAMES

ORIGINATOR	CONSTRUCTION DRAWING REF.	TITLE	Rev	Sheet	Size
C.G DORIS	A1-MP. ØF 1219	FREE LOCK DETAIL	3		A1

ELF DRAWING NUMBER	REVISION Index	REVISION Date	TITLE
SUB SEA TASK 1122A		31-8-82	CELL C + PHOTOGRAPHIC REPORT (SLIDES)
SUB SEA TASK 1122B		24-9-82	CELL D + PHOTOGRAPHIC REPORT (SLIDES)

Rev.	Date	DESCRIPTION	by	app.

Contractor

elf aquitaine norge a/s
p.o.box 168
4001 Stavanger

elf
FRIGG FIELD

Job no.	Installation	System
	CDP 1	UNDERWATER
Scale		
Dwgr. no. FF 1471	Rev.	Sheet 1

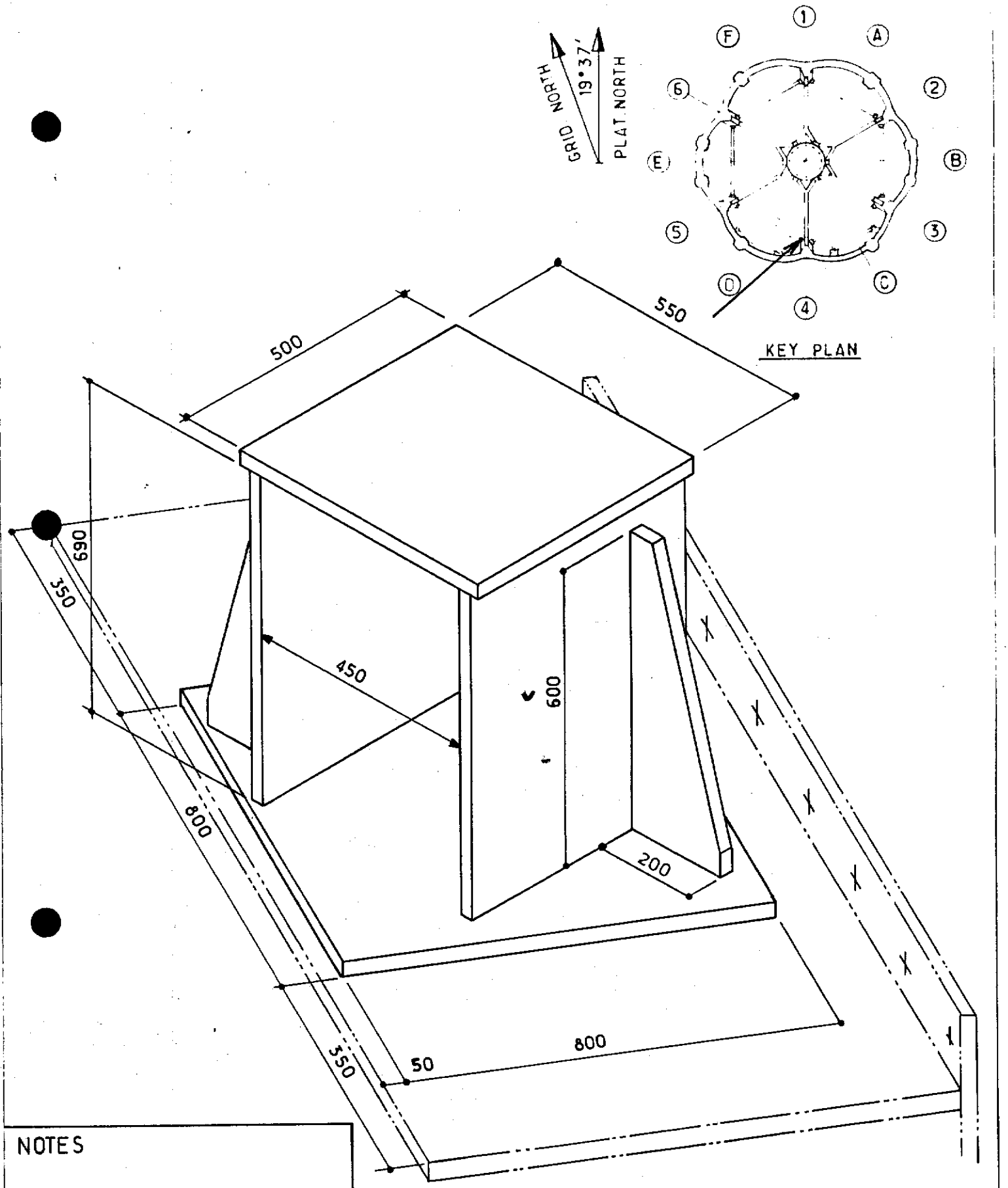

NOTES

ALL PLATES 30 mm thk.

LEVEL C. EL:- 36,835 MLW (+ 59.500)

Rev.	Date	DESCRIPTION	by	app.
1	12.83	UP DATED	B.V.H	JLC

Contractor JVD 1029.40.142

elf aquitaine norge a/s
p.o.box 168
4001 Stavanger

elf
FRIGG FIELD

Job no.	Installation	System
	CDP 1	UNDERWATER
Scale 1/10°	REMAINING PART OF GUIDE BOX CD 1 CELL D LEVEL C	
Dwgr. no FF 91·36·35·1472	1	

CDP 1 AS BUILT DRAWINGS

REFERENCE DRAWING LIST FOR: CONDUCTOR GUIDE FRAMES

ORIGINATOR	CONSTRUCTION DRAWING REF.	TITLE	Rev	Sheet	Size
C.G. DORIS	A1-MP. ØF 1219	FREE LOCK DETAIL	3		A1

ELF DRAWING NUMBER	REVISION Index	REVISION Date	TITLE
SUB SEA TASK 1122 A		31-8-82	CELL C + PHOTOGRAPHIC REPORT (SLIDES)
SUB SEA TASK 1122 B		24-9-82	CELL D + PHOTOGRAPHIC REPORT (SLIDES)

Rev.	Date	DESCRIPTION	by	app.

Contractor

elf aquitaine norge a/s
p.o.box 168
4001 Stavanger

elf
FRIGG FIELD

Job no.	Installation CDP 1	System UNDERWATER
Scale		
Dwgr. no. FF 1472	Rev.	Sheet 1

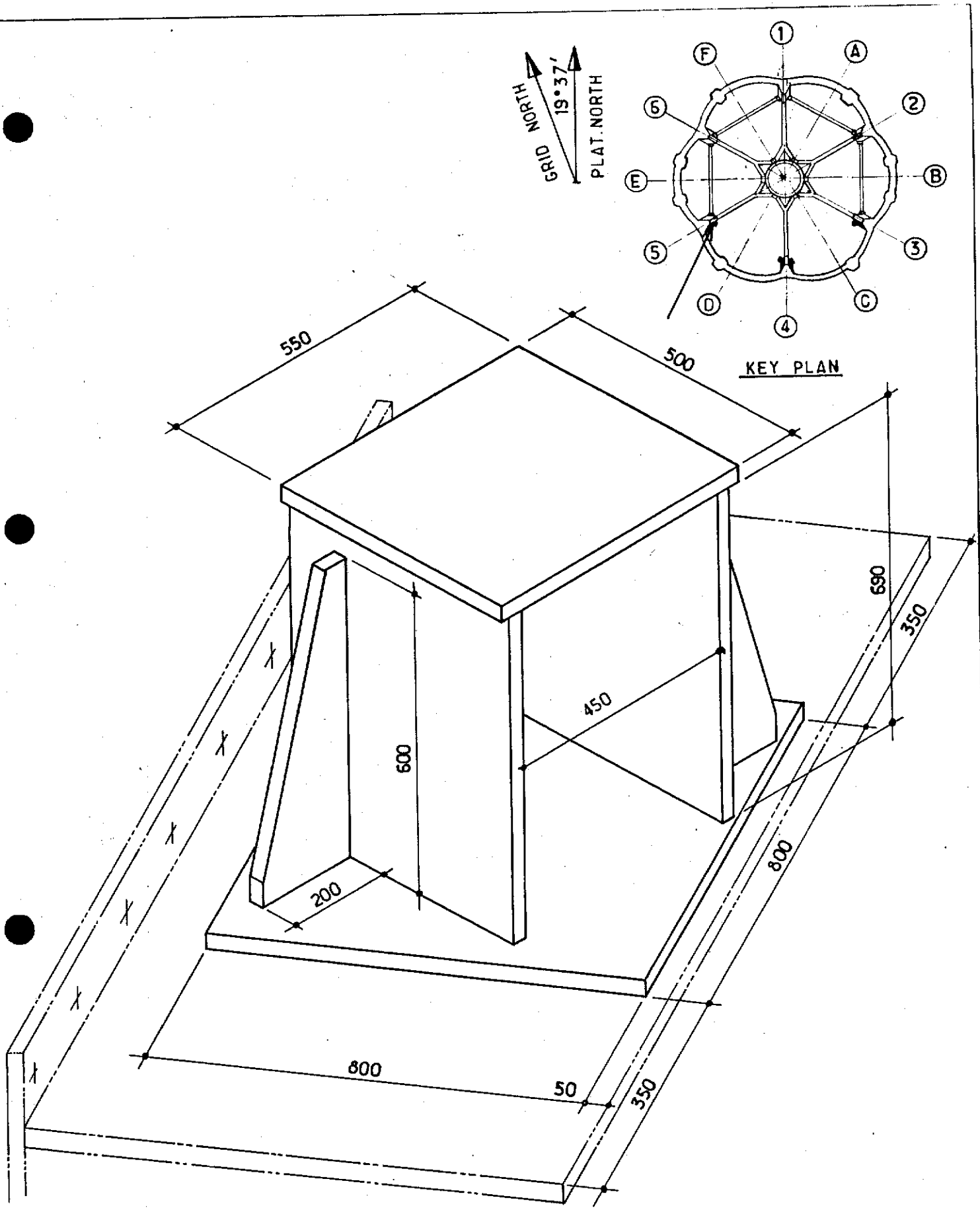

NOTES

ALL PLATES 30 mm thk.

LEVEL C : EL:- 36.835 MLW (+59.50

Rev.	Date	DESCRIPTION	by	app.
1	12.83	UP DATED	BVH	HC

Contractor JVD 1029.40.143.

elf aquitaine norge a/s
p.o.box 168
4001 Stavanger

elf
FRIGG FIELD

Job no.	Installation	System
	CDP 1	UNDERWATER

Scale 1/10°

REMAINING PART OF GUIDE BOX
C D 4
CELL D LEVEL C

Dwgr. no. FF.91.36.35.1473

Rev 1

Sheet /

Form 100 318

CDP 1 AS BUILT DRAWINGS

REFERENCE DRAWING LIST FOR: CONDUCTOR GUIDE FRAMES

ORIGINATOR	CONSTRUCTION DRAWING REF.	TITLE	Rev	Sheet	Size
C.G DORIS	A1-MP. ØF 1219	FREE LOCK DETAIL	3		A1

ELF DRAWING NUMBER	REVISION Index	REVISION Date	TITLE
SUB SEA TASK 1122 A		31-8-82	CELL C + PHOTOGRAPHIC REPORT (SLIDES)
SUB SEA TASK 1122 B		24-9-82	CELL D + PHOTOGRAPHIC REPORT (SLIDES)

Rev.	Date	DESCRIPTION	by	app.

Contractor

elf aquitaine norge a/s
p.o.box 168
4001 Stavanger

elf

FRIGG FIELD

Job no.	Installation	System
	CDP 1	UNDERWATER
Scale		
Dwgr. no. EE 1473	Rev.	Sheet

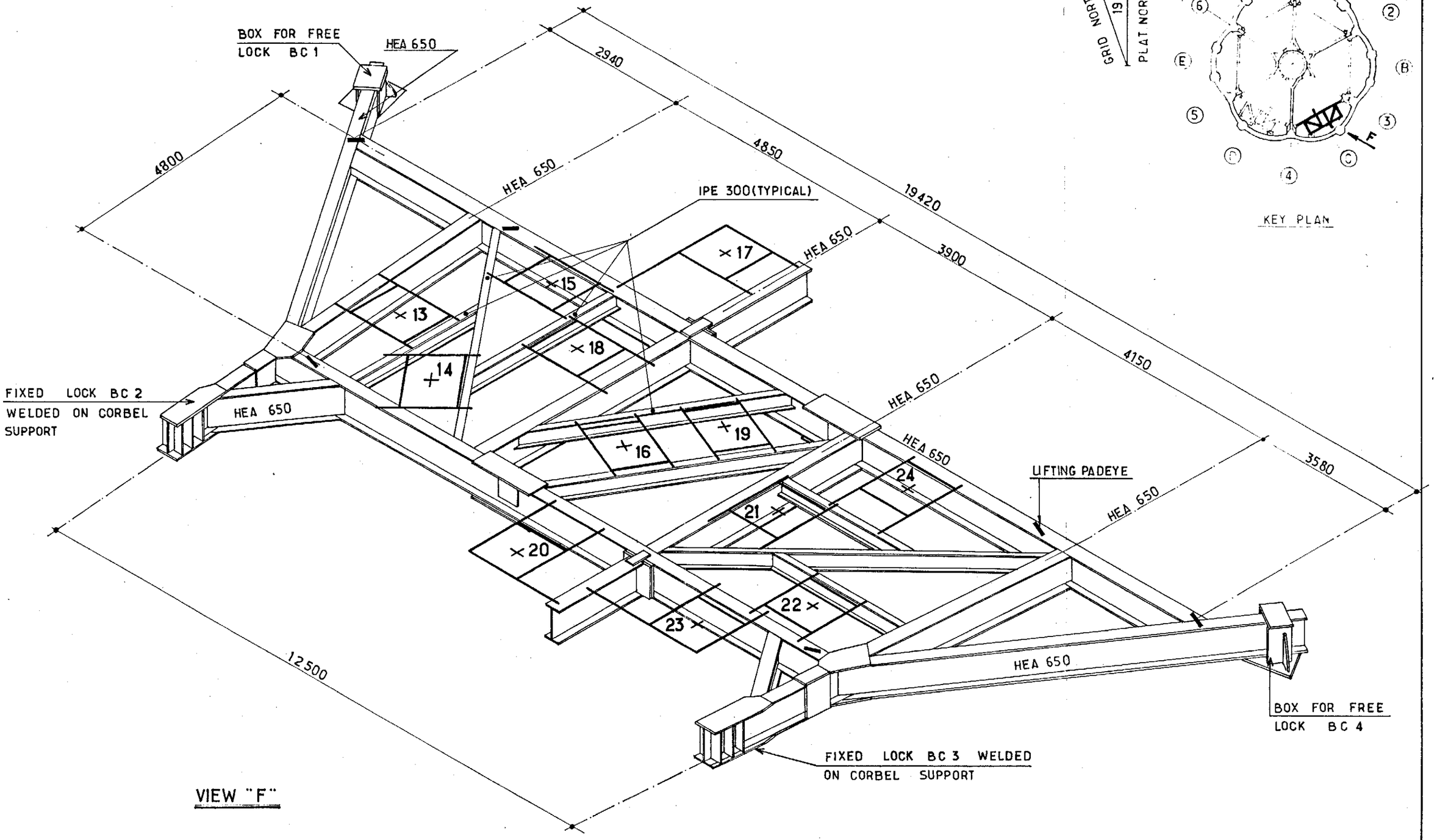

LEVEL B : EL.: ~ 59.835 (+36.500)

NOTES

FOR SECONDARY FRAME SEE SK FF_91_36_35_1480_/ 1481_/ 1482.
FOR BOX FOR FREE LOCK SEE SK FF_91_36_35_1483. TO FF_91_36_35_1486.

Rev.	Date	DESCRIPTION	by	app.
1	12.83	UP DATED	BVH	JAC

Contractor JVD 1029.40. 148

elf aquitaine norge a/s
p.o.box 168
4001 Stavanger

elf
FRIGG FIELD

Job no.	Installation	System
	CDP 1	UNDERWATER
Scale 1/75	GENERAL VIEW OF GUIDE FRAME CELL."C"_ LEVEL "B"	
Dwgr. no FF_91_36_35_1478	1	

CDP 1 AS BUILT DRAWINGS

REFERENCE DRAWING LIST FOR: CONDUCTOR GUIDE FRAME

ORIGINATOR	CONSTRUCTION DRAWING REF.	TITLE	Rev	Sheet	Size
C.G. DORIS	AO-MP-QF 1046	GUIDE FRAME IN PROFILED CB-CC	6		A0
" "	AO-MP-QF 1048	GENERAL ARRANGEMENT OF GUIDE FRAME CB.CC	5		A0

ELF DRAWING NUMBER	REVISION Index	REVISION Date	TITLE

Rev.	Date	DESCRIPTION	by	app.

Contractor JVD 1029 4041

elf aquitaine norge a/s
p.o.box 168
4001 Stavanger

elf
FRIGG FIELD

Job no.	Installation	System
	CDP 1	UNDERWATER
Scale		
Dwgr. no. FF ___ ___ 1478	Rev.	Sheet /

Form 100 318

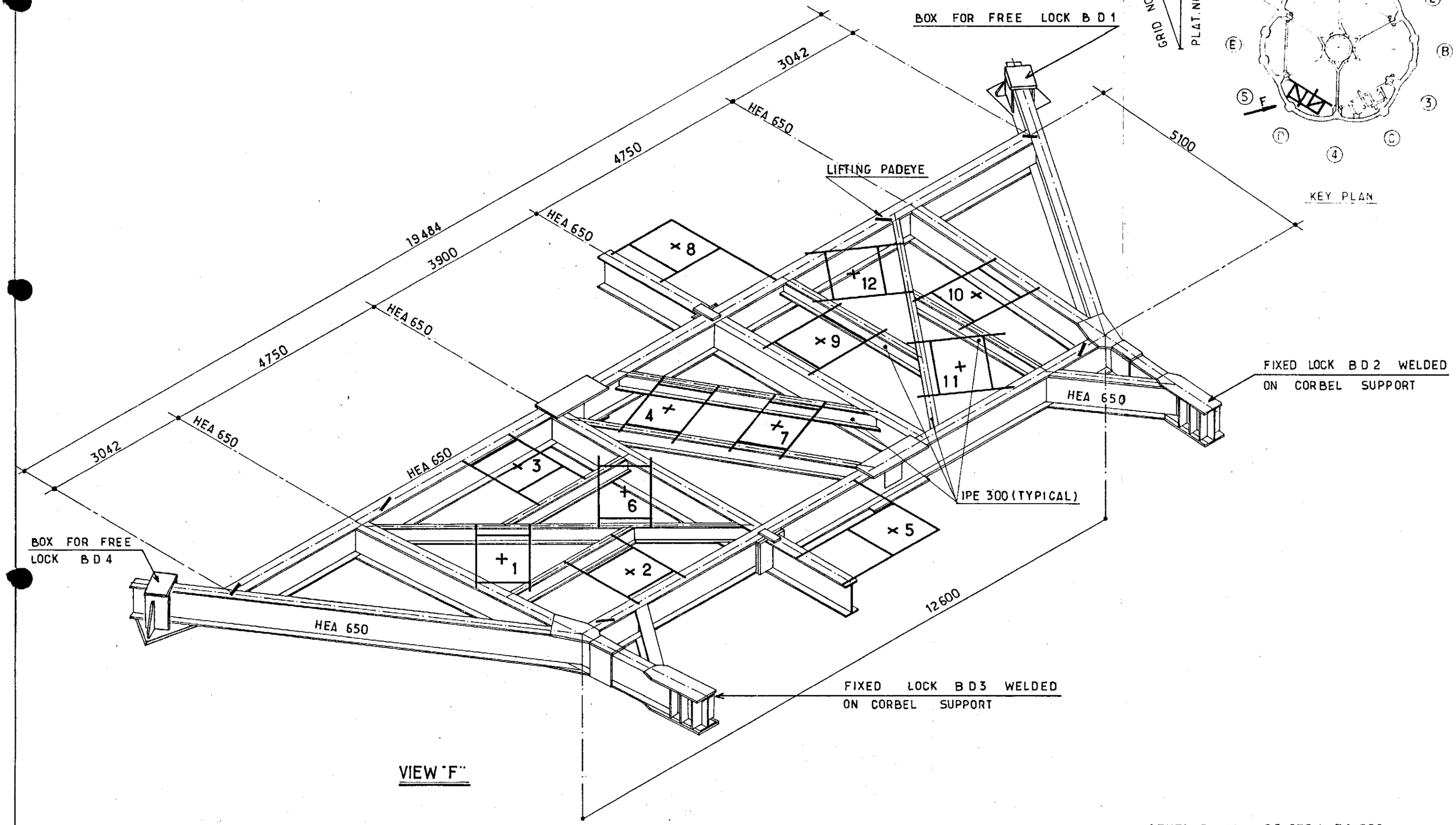

LEVEL B: EL: - 59.835 (+ 36.500)

NOTES

FOR SECONDARY FRAME SEE SK FF. 91.36.35.1480./1481 / 1482.
FOR BOX FOR FREE LOCK SEE SK FF. 91.36.35.1483. TO FF. 91.36.35.1486.

Rev.	Date	DESCRIPTION	by	app
1	12.83	UP DATED	B.V.H.	J.L.C.

Contractor JVD 1029.40.149

elf aquitaine norge a/s
p.o.box 168
4001 Stavanger

elf
FRIGG FIELD

Job no.	Installation	System
	CDP 1	UNDERWATER
Scale 1/75°	GENERAL VIEW OF GUIDE FRAME CELL. "D" - LEVEL "B"	
Dwgr. no FF. 91.36.35.1479.	1	

CDP 1 AS BUILT DRAWINGS

REFERENCE DRAWING LIST FOR: CONDUCTOR GUIDE FRAME

ORIGINATOR	CONSTRUCTION DRAWING REF.	TITLE	Rev	Sheet	Size
C. G. DORIS	AO. MP. QF. 1047	GUIDE FRAME IN PROFILE DB-DC	5		AO
" "	AO. MP-QF. 1049	GENERAL ARRANGEMENT OF GUIDE FRAME DB-DC	5		AO

ELF DRAWING NUMBER	REVISION Index	REVISION Date	TITLE

Rev.	Date	DESCRIPTION	by	app.

Contractor JVD 1029-40-42

elf aquitaine norge a/s
p.o.box 168
4001 Stavanger

elf

FRIGG FIELD

Job no.	Installation	System
	CDP 1	UNDERWATER
Scale		
Dwgr. no. FF 1479	Rev.	Sheet /

Form 100 318

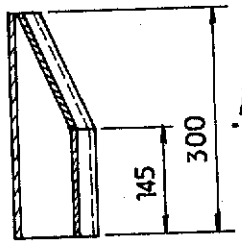

SECTION A-A

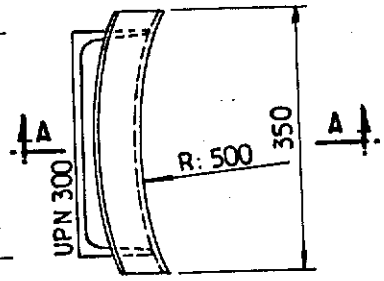

TYPICAL PLAN VIEW

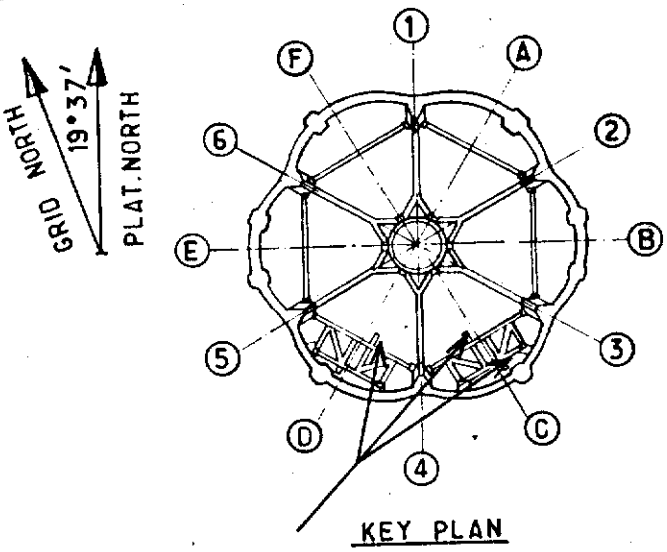

KEY PLAN

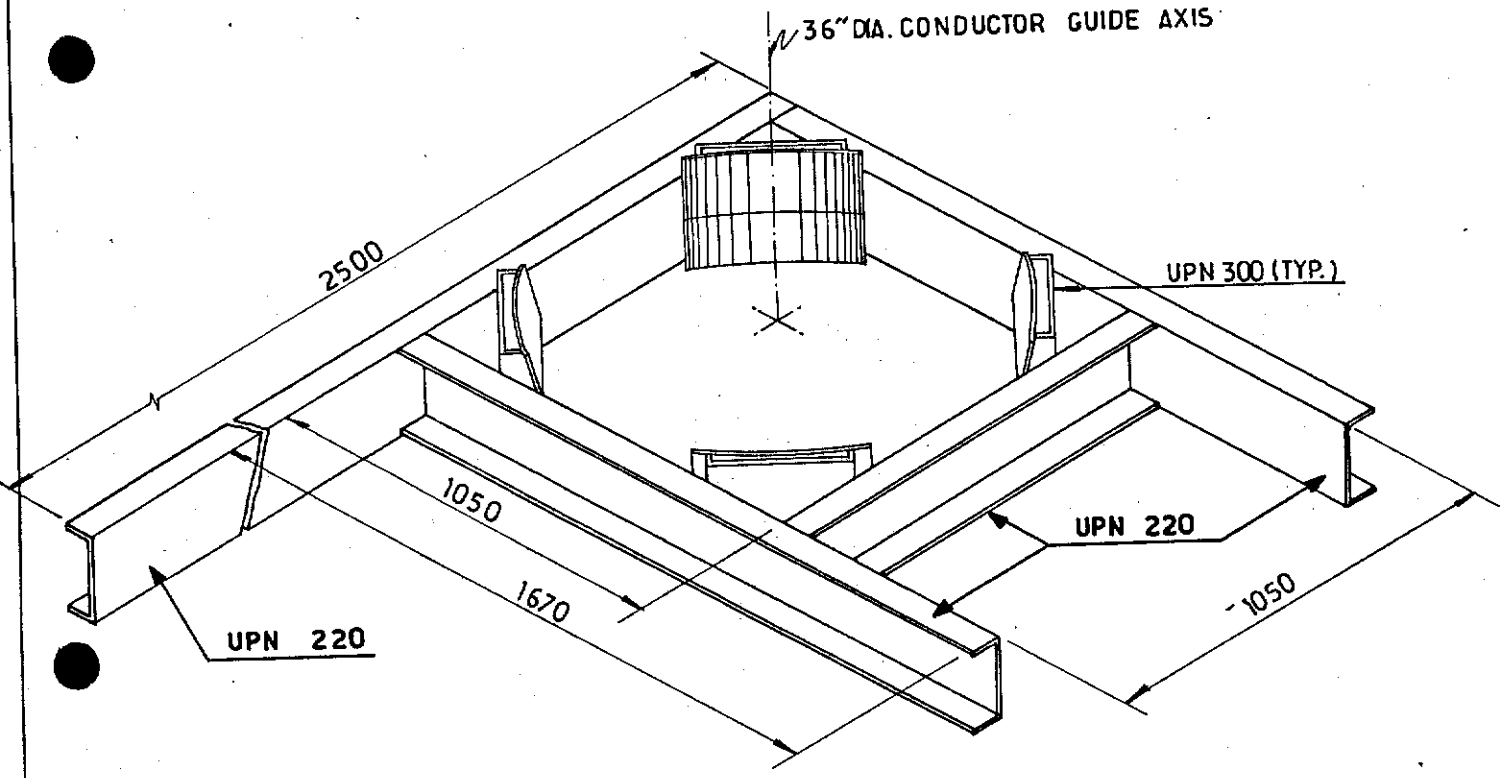

NOTES

FOR LOCATION SEE SK FF.91.36.35.1478. AND FF.91.36.35.1479.
1 IDENTICAL ITEMS AS DRAWN FOR CONDUCTORS "17"
2 SYMMETRICAL ITEM FOR CONDUCTORS "23" AND "8"

Rev.	Date	DESCRIPTION	by	app.
1	12.83	UP DATED	BVH	JLC

Contractor JVD.1029.40.150

elf aquitaine norge a/s
p.o.box 168
4001 Stavanger

elf
FRIGG FIELD

Job no.	Installation	System
	CDP 1	UNDERWATER
Scale 1/20°	SECONDARY FRAME - TYPE 1 - LEVEL "B" CELL "C" AND "D"	
Dwgr. no. FF.91.36.35.1480.	Rev 1	Sheet /

Form 100 318

CDP 1 AS BUILT DRAWINGS

REFERENCE DRAWING LIST FOR: CONDUCTOR GUIDE FRAME

ORIGINATOR	CONSTRUCTION DRAWING REF.	TITLE	Rev	Sheet	Size
C.G DORIS	A1-MP. QF 1050	GUIDING AND PROFILED	2		A1
" "	A1-MP. QF-1051	SECONDARY FRAME	2		A1

ELF DRAWING NUMBER	REVISION Index	REVISION Date	TITLE

Rev.	Date	DESCRIPTION	by	app.

Contractor

elf aquitaine norge a/s
p.o.box 168
4001 Stavanger

elf

FRIGG FIELD

Job no.	Installation CDP 1	System UNDERWATER
Scale		
Dwgr. no. FF 1480	Rev.	Sheet /

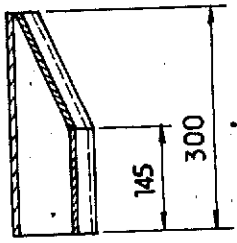

SECTION A-A

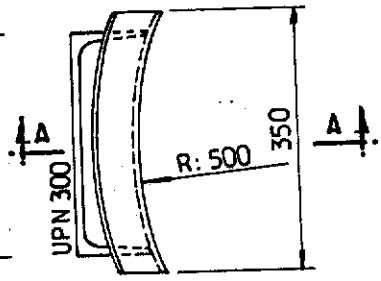

TYPICAL PLAN VIEW

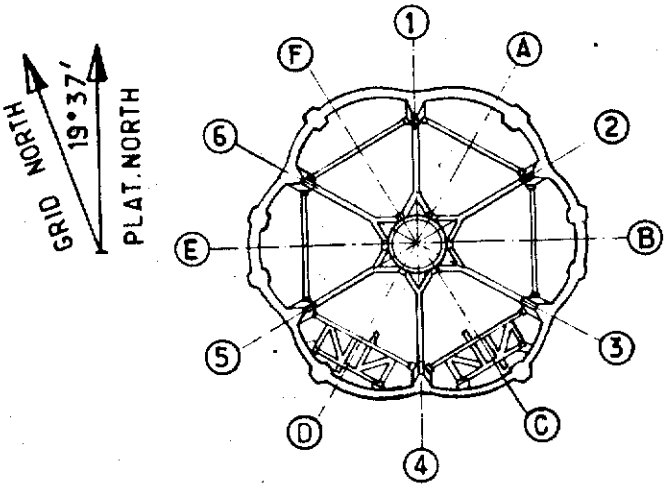

KEY PLAN

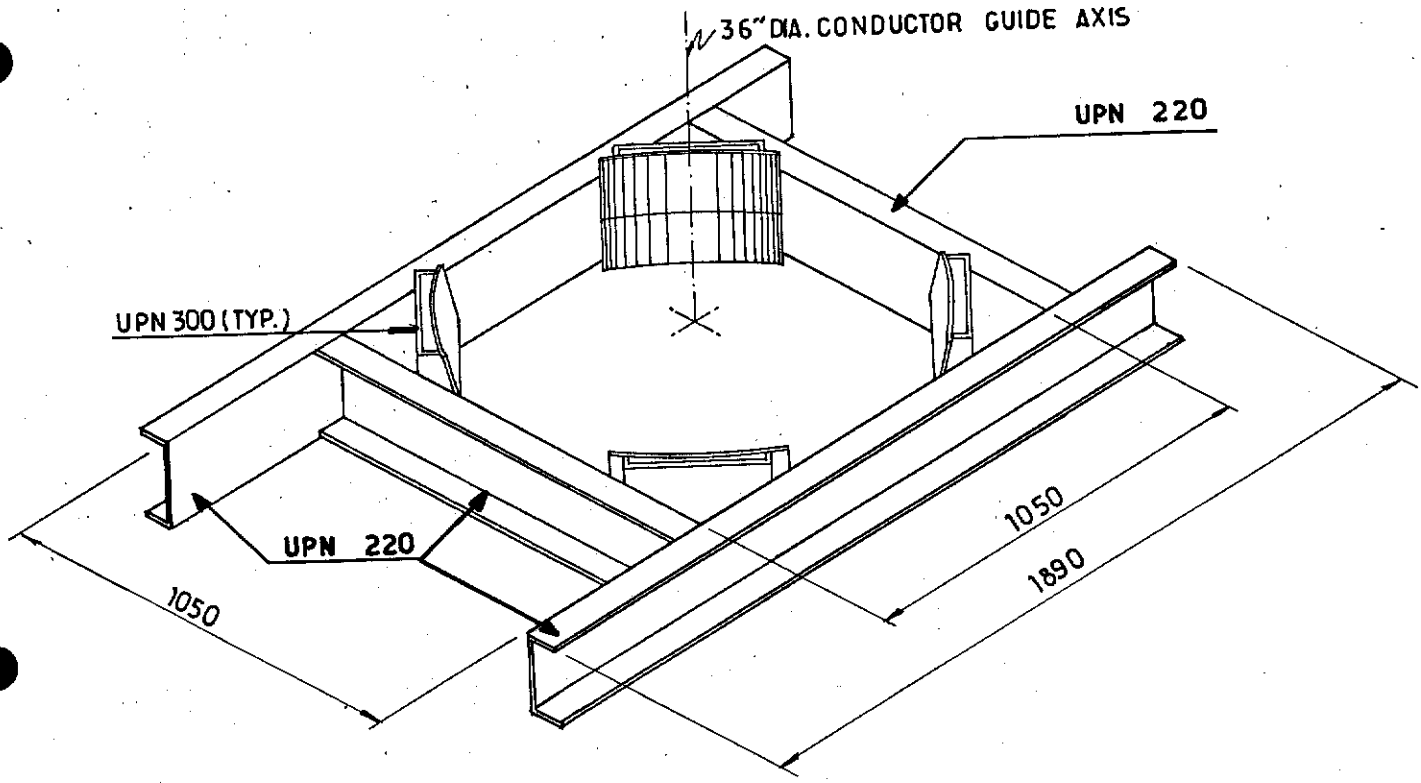

NOTES

FOR LOCATION SEE SK FF_91_36_35_1478_ AND FF_91_36_35_1479_
19 IDENTICAL ITEMS AS DRAWN FOR CONDUCTORS "1,2,3,4,6,7,9,10,11,12,13,14,15,16,18,19,21,22,24."

Rev.	Date	DESCRIPTION	by	app.
1	12.83	UP DATED	B.V.H	J.L.C

Contractor JVD 1029_40_151

elf aquitaine norge a/s
p.o.box 168
4001 Stavanger

elf
FRIGG FIELD

Job no.	Installation CDP 1	System UNDERWATER
Scale 1/20°	SECONDARY FRAME _ TYPE 2 _ LEVEL "B" CELL "C" AND "D"	
Dwgr. no. FF_91.36.35.1481_	Rev 1	Sheet /

Form 100 318

CDP 1 AS BUILT DRAWINGS

REFERENCE DRAWING LIST FOR: CONDUCTOR GUIDE FRAME

ORIGINATOR	CONSTRUCTION DRAWING REF.	TITLE	Rev	Sheet	Size
C.G DORIS	A1-MP-QE 1050	GUIDING AND PROFILED	2		A1
" "	A1-MP-QE-1051	SECONDARY FRAME	2		A1

ELF DRAWING NUMBER	REVISION Index	REVISION Date	TITLE

Rev.	Date	DESCRIPTION	by	app.

Contractor

elf aquitaine norge a/s
p.o.box 168
4001 Stavanger

elf

FRIGG FIELD

Job no.	Installation	System
	CDP 1	UNDERWATER
Scale		
Dwgr. no. FF 1481	Rev.	Sheet 1

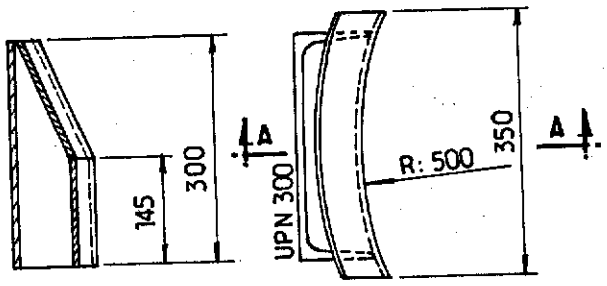

SECTION A.A

TYPICAL PLAN VIEW

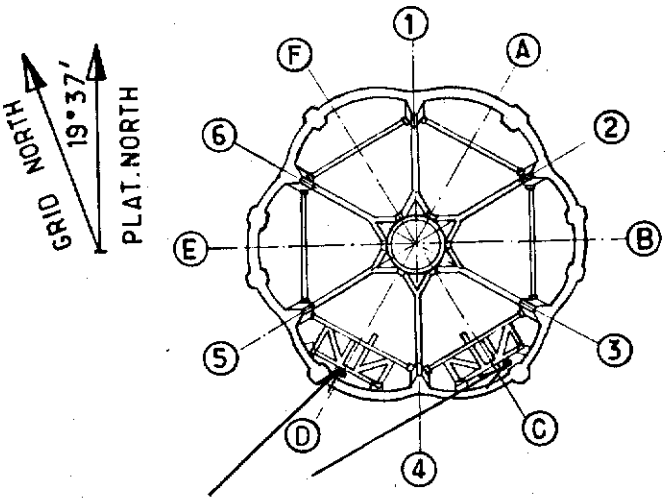

KEY PLAN

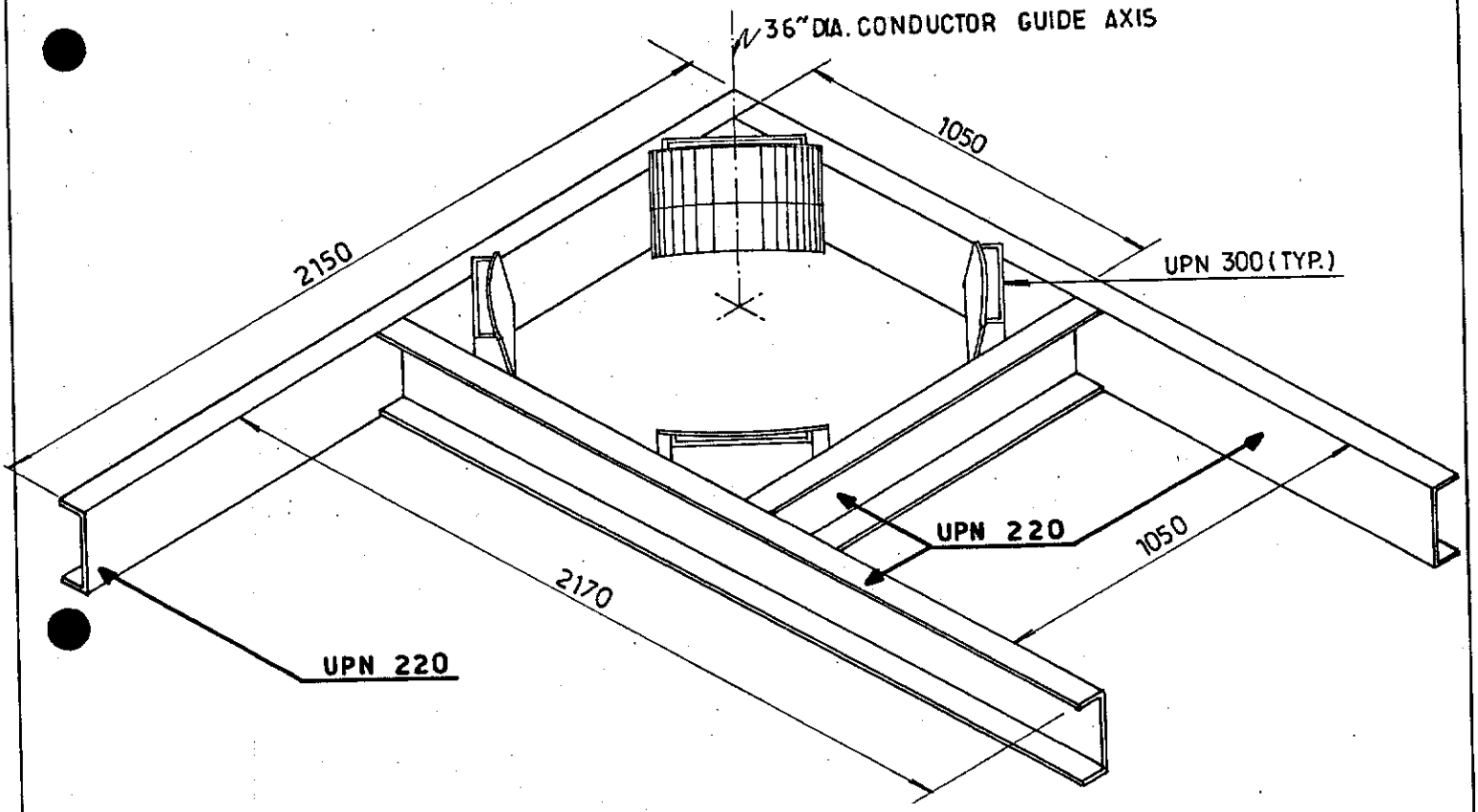

NOTES

FOR LOCATION SEE SK FF_91_36_35_1478_ AND FF_91_36.35_1479_
2 IDENTICAL ITEMS AS DRAWN FOR CONDUCTORS "20" AND "5"

Rev.	Date	DESCRIPTION	by	app.
1	12.83	UP DATED	BVH	H-LC

Contractor JVD 1029.40.152

elf aquitaine norge a/s
p.o.box 168
4001 Stavanger

elf
FRIGG FIELD

Job no.	Installation	System
	CDP 1	UNDERWATER
Scale 1/20°	SECONDARY FRAME _TYPE 3_ LEVEL "B" CELL "C" AND "D"	
Dwgr. no. FF_91_36_35_1482_	Rev. 1	Sheet /

Form 100 318

CDP 1 AS BUILT DRAWINGS

REFERENCE DRAWING LIST FOR: CONDUCTOR GUIDE FRAME

ORIGINATOR	CONSTRUCTION DRAWING REF.	TITLE	Rev	Sheet	Size
C.G. DORIS	A1-MP-QF 1050	GUIDING AND PROFILED	2		A1
" "	A1-MP-QF-1051	SECONDARY FRAME	2		A1

ELF DRAWING NUMBER	REVISION Index	REVISION Date	TITLE

Rev.	Date	DESCRIPTION	by	app.

Contractor

elf aquitaine norge a/s
p.o.box 168
4001 Stavanger

elf

FRIGG FIELD

Job no.	Installation	System
	CDP 1	UNDERWATER
Scale		
Dwgr. no. FF ___ ___ 1482	Rev.	Sheet /

Form 100 318

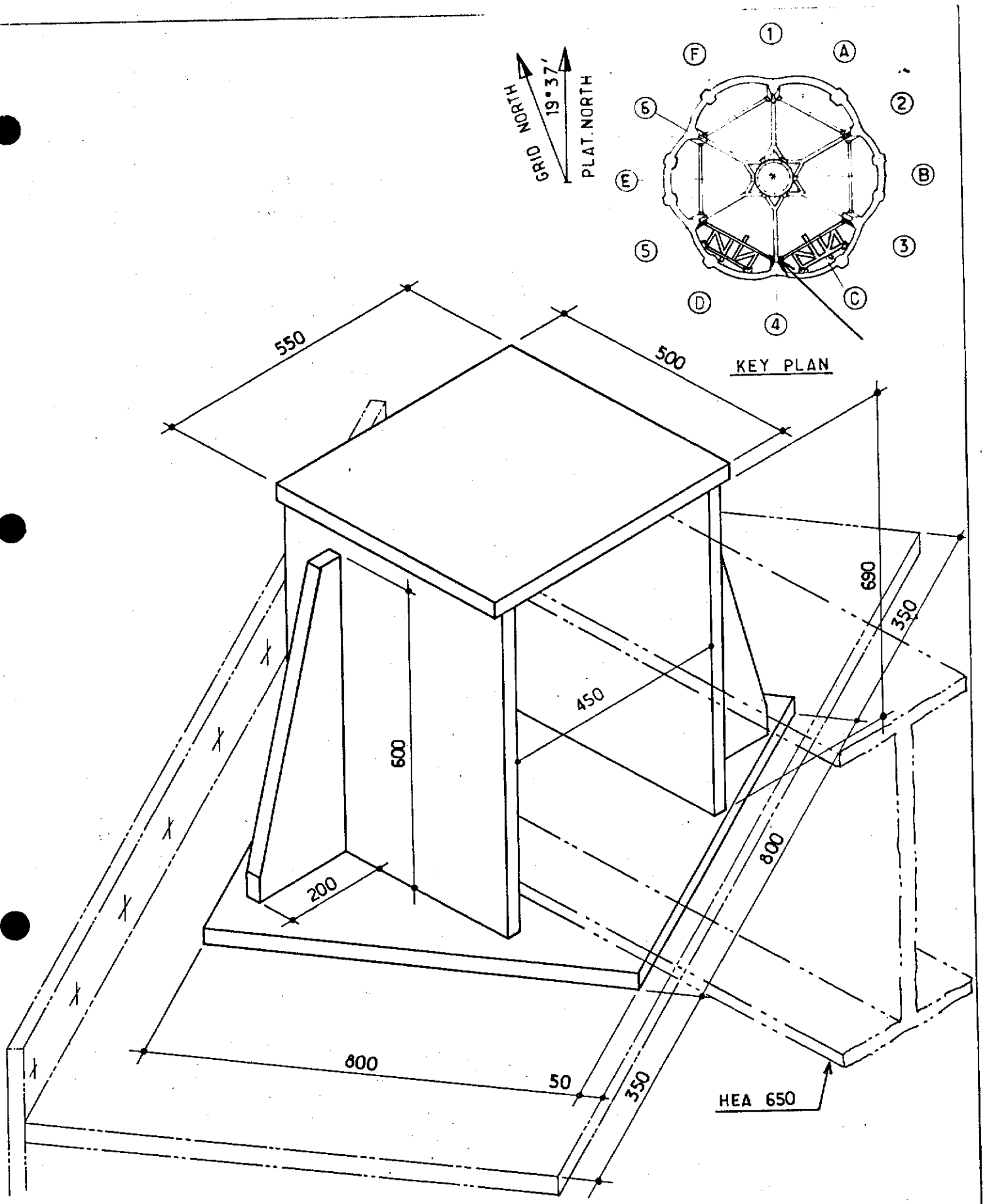

NOTES
FOR LOCATION SEE SK FF 91 36 35 1478
ALL PLATES 30 mm thk.

LEVEL B: EL: - 59.835 MLW (+36.500)

Rev.	Date	DESCRIPTION	by	app.
1	12.83	UP DATED	BVH	JLC

Contractor JVD 1029.40.153.

elf aquitaine norge a/s
p.o.box 168
4001 Stavanger

elf
FRIGG FIELD

Job no.	Installation	System
	CDP 1	UNDERWATER
Scale 1/10°	BOX FOR FREE LOCK B C 1 CELL C LEVEL B	
Dwgr. no FF. 91.36.35.1483	No. 1	Sheet

CDP 1 AS BUILT DRAWINGS

REFERENCE DRAWING LIST FOR: CONDUCTOR GUIDE FRAMES

ORIGINATOR	CONSTRUCTION DRAWING REF.	TITLE	Rev	Sheet	Size
C.G DORIS	A1-MP.ØF 1219	FREE LOCK DETAIL	3		A1

ELF DRAWING NUMBER	REVISION Index	REVISION Date	TITLE
SUB SEA TASK 1122 A		31-8-82	CELL C + PHOTOGRAPHIC REPORT (SLIDES)
SUB SEA TASK 1122 B		24-9-82	CELL D + PHOTOGRAPHIC REPORT (SLIDES)

Rev.	Date	DESCRIPTION	by	app.

Contractor

elf aquitaine norge a/s
p.o.box 168
4001 Stavanger

elf
FRIGG FIELD

Job no.	Installation	System
	CDP 1	UNDERWATER
Scale		
Dwgr. no. FF 1483	Rev.	Sheet 1

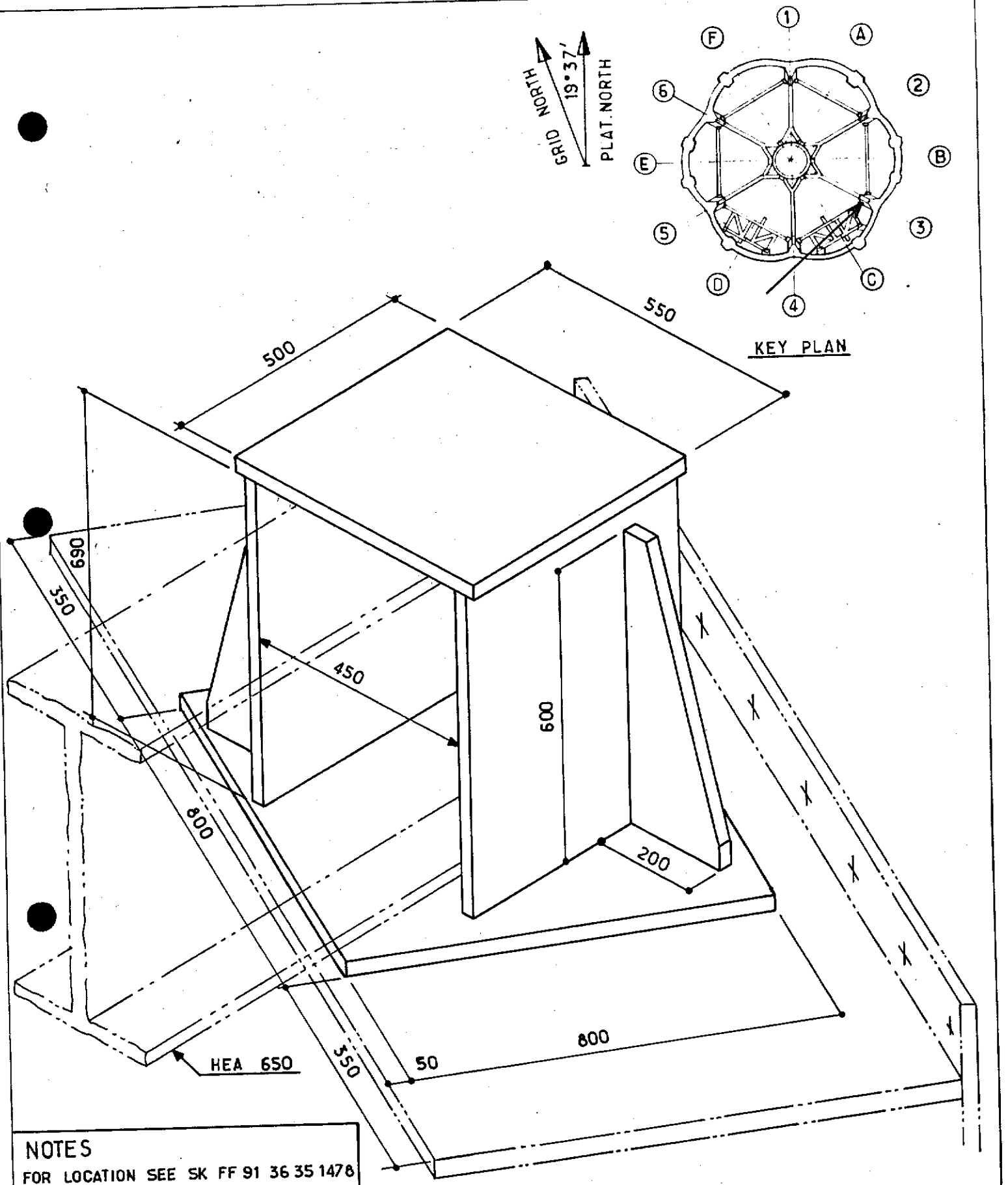

NOTES
FOR LOCATION SEE SK FF 91 36 35 1478
ALL PLATES 30 mm thk.

LEVEL B. EL;- 59.835 MLW (+ 36.500)

Rev.	Date	DESCRIPTION	by	app.
1	12.83	UP DATED	BVH	HC

Contractor JVD 1029.40.154

elf aquitaine norge a/s
p.o.box 168
4001 Stavanger

elf
FRIGG FIELD

Job no.	Installation	System
	CDP 1	UNDERWATER
Scale 1/10°	BOX FOR FREE LOCK BC 4 CELL C LEVEL B	
Dwgr. no. FF 91·36·35·1484	No. 1	Sheet /

CDP 1 AS BUILT DRAWINGS

REFERENCE DRAWING LIST FOR: CONDUCTOR GUIDE FRAMES

ORIGINATOR	CONSTRUCTION DRAWING REF.	TITLE	Rev	Sheet	Size
C.G. DORIS	A1-MP. QF 1219	FREE LOCK DETAIL	3		A1

ELF DRAWING NUMBER	REVISION Index	REVISION Date	TITLE
SUB SEA TASK 1122 A		31-8-82	CELL C + PHOTOGRAPHIC REPORT (SLIDES)
SUB SEA TASK 1122 B		24-9-82	CELL D + PHOTOGRAPHIC REPORT (SLIDES)

Rev.	Date	DESCRIPTION	by	app.

Contractor

elf aquitaine norge a/s
p.o.box 168
4001 Stavanger

elf
FRIGG FIELD

Job no.	Installation	System
	CDP 1	UNDERWATER
Scale		
Dwgr. no. FF 1484	Rev.	Sheet 1

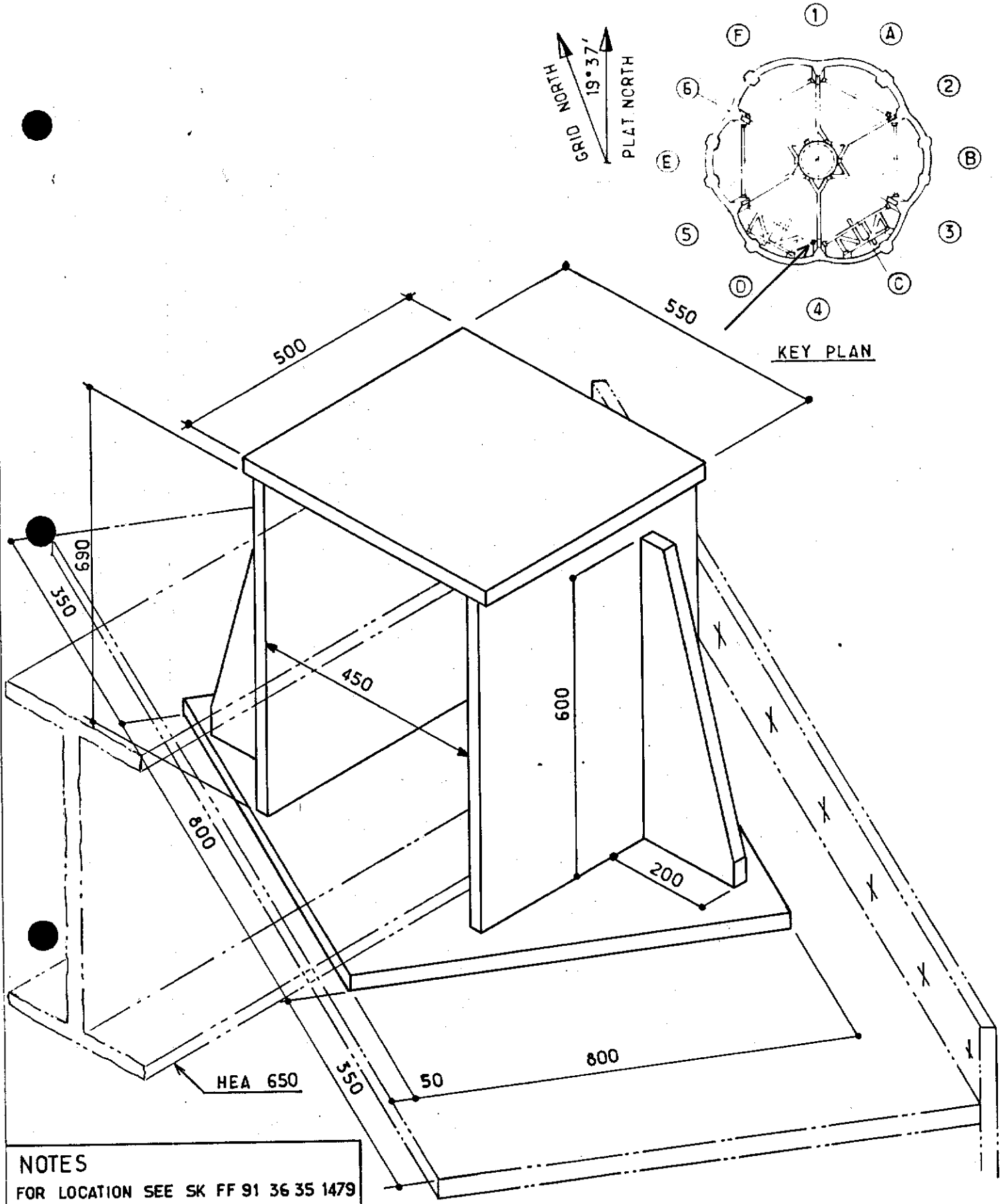

NOTES

FOR LOCATION SEE SK FF 91 36 35 1479

ALL PLATES 30 mm thk.

LEVEL B . EL: - 59.835 MLW (+ 36.500)

Rev.	Date	DESCRIPTION	by	app.
1	12.83	UP DATED	BVH	LLC

Contractor JVD 1029.40.155

elf aquitaine norge a/s
p.o.box 168
4001 Stavanger

elf
FRIGG FIELD

Job no.	Installation	System
	CDP 1	UNDERWATER
Scale 1/10°	BOX FOR FREE LOCK BD1 CELL D LEVEL B	
Dwgr. no FF 91·36·35·1485	1	

CDP 1 AS BUILT DRAWINGS

REFERENCE DRAWING LIST FOR: CONDUCTOR GUIDE FRAMES

ORIGINATOR	CONSTRUCTION DRAWING REF.	TITLE	Rev	Sheet	Size
C.G DORIS	A1-MP. ØF 1219	FREE LOCK DETAIL	3		A1

ELF DRAWING NUMBER	REVISION Index	REVISION Date	TITLE
SUB SEA TASK 1122 A		31-8-82	CELL C + PHOTOGRAPHIC REPORT (SLIDES)
SUB SEA TASK 1122 B		24-9-82	CELL D + PHOTOGRAPHIC REPORT (SLIDES)

Rev.	Date	DESCRIPTION	by	app.

Contractor

elf aquitaine norge a/s
p.o.box 168
4001 Stavanger

elf
FRIGG FIELD

Job no.	Installation	System
	CDP 1	UNDERWATER
Scale		
Dwgr. no. FF 1485	Rev.	Sheet /

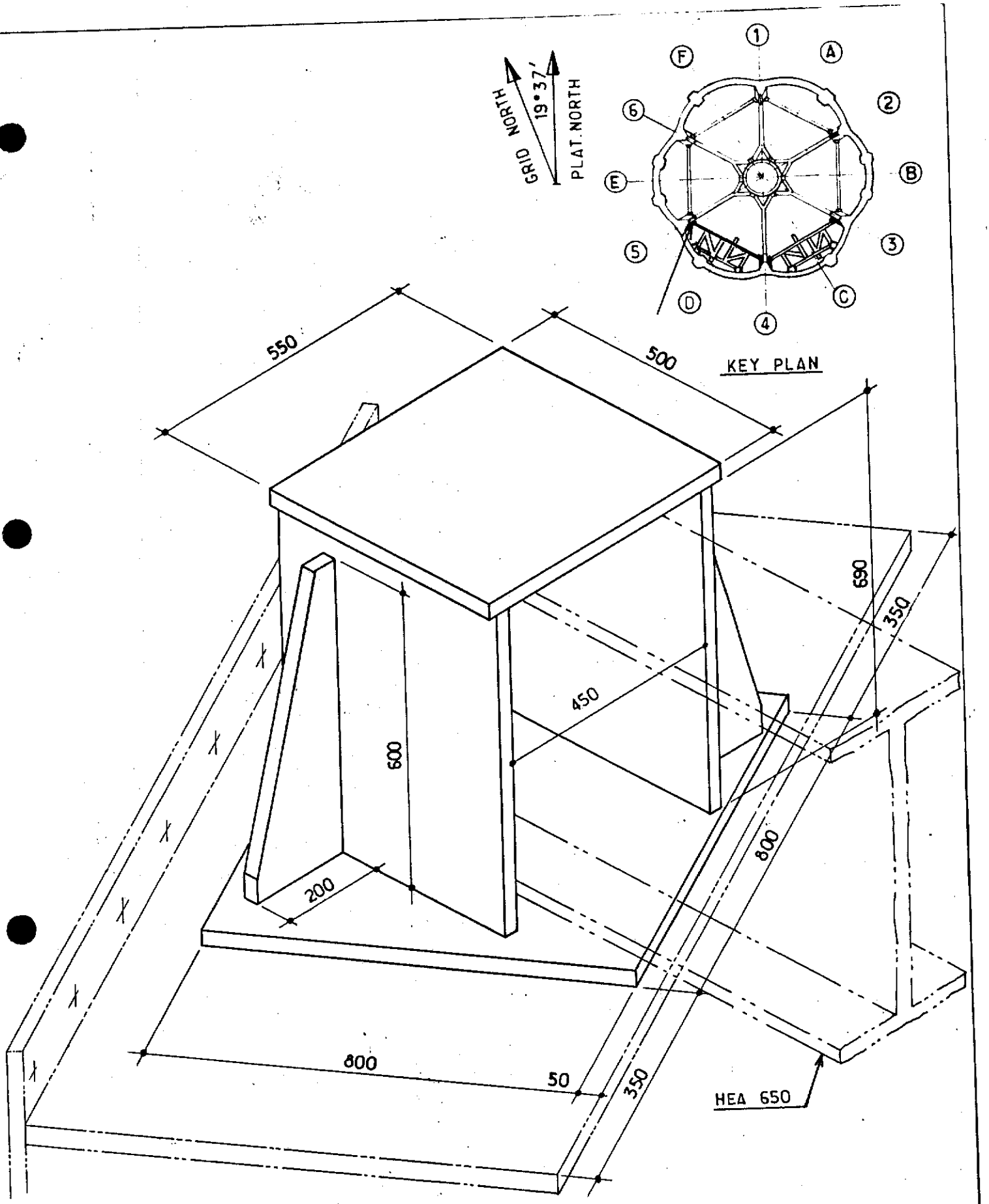

NOTES
FOR LOCATION SEE SK FF 91 36 35 1479
ALL PLATES 30 mm thk.

LEVEL B: EL: -59.835 MLW (+36,500)

Rev.	Date	DESCRIPTION	by	app.
1	12.83	UP DATED	BVH	MC

Contractor JVD 1029.40.156.

elf aquitaine norge a/s
p.o.box 168
4001 Stavanger

elf
FRIGG FIELD

Job no.	Installation	System
	CDP 1	UNDERWATER

Scale 1/10°

BOX FOR FREE LOCK
BD 4
CELL D LEVEL B

Dwgr. no. FF. 91.36.35.1486 | Rev. 1 | Sheet /

Form 100 318

CDP 1 AS BUILT DRAWINGS

REFERENCE DRAWING LIST FOR: CONDUCTOR GUIDE FRAMES

ORIGINATOR	CONSTRUCTION DRAWING REF.	TITLE	Rev	Sheet	Size
C.G. DORIS	A1-MP. ØF 1219	FREE LOCK DETAIL	3		A1

ELF DRAWING NUMBER	REVISION Index	REVISION Date	TITLE
SUB SEA TASK 1122 A		31-8-82	CELL C + PHOTOGRAPHIC REPORT (SLIDES)
SUB SEA TASK 1122 B		24-9-82	CELL D + PHOTOGRAPHIC REPORT (SLIDES)

Rev.	Date	DESCRIPTION	by	app.

Contractor

elf aquitaine norge a/s
p.o.box 168
4001 Stavanger

elf
FRIGG FIELD

Job no.	Installation	System
	CDP 1	UNDERWATER
Scale		
Dwgr. no. FF 1486	Rev.	Sheet 1

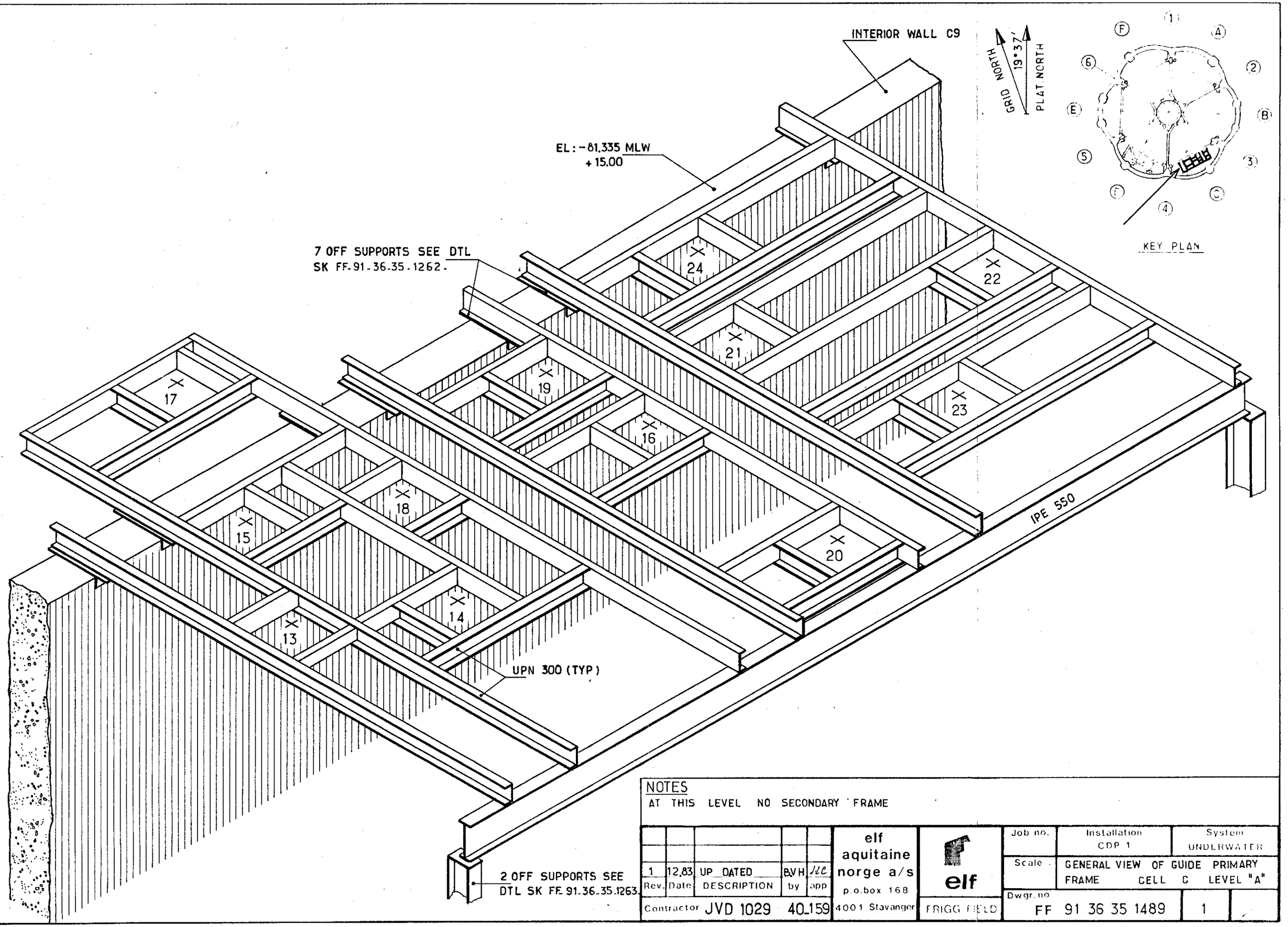

NOTES

AT THIS LEVEL NO SECONDARY FRAME

Rev.	Date	DESCRIPTION	by	app
1	12.83	UP DATED	BVH	JLE

Contractor JVD 1029 40_159

elf aquitaine norge a/s
p.o.box 168
4001 Stavanger

elf
FRIGG FIELD

Job no.	Installation	System
	CDP 1	UNDERWATER

Scale

GENERAL VIEW OF GUIDE PRIMARY FRAME CELL C LEVEL "A"

Dwgr. no FF 91 36 35 1489 | 1

CDP 1 AS BUILT DRAWINGS

REFERENCE DRAWING LIST FOR: CONDUCTOR GUIDE FRAME

ORIGINATOR	CONSTRUCTION DRAWING REF.	TITLE	Rev	Sheet	Size
C. G. DORIS	A1. MP. ØF 1023	LOCATION OF CONDUCTOR SLEEVES IN CELL D	1		A1
" "	A1. MP. ØF 1024	LOCATION OF CONDUCTOR SLEEVES IN CELL C	1		A1
" "	A1. MP. ØF 1025	VERTICAL VIEW OF CONDUCTOR SLEEVES	1		A1
" "	A1. MP. ØF 1029	GUIDE FOR CONDUCTOR SLEEVES ON TOP OF TUNNEL C	1		A1
" "	A1. MP. ØF 1030	GUIDE FOR CONDUCTOR SLEEVES ON TOP OF TUNNEL D	1		A1
"	A1. MP. ØF 1114	FEMALE CONE OF ENTRANCE ON THE CONDUCTOR SLEEVES	1		A1

ELF DRAWING NUMBER	REVISION Index	REVISION Date	TITLE

Rev.	Date	DESCRIPTION	by	app.

Contractor

elf aquitaine norge a/s
p.o.box 168
4001 Stavanger

elf

FRIGG FIELD

Job no.	Installation	System
	CDP 1	UNDERWATER
Scale		
Dwgr. no. EE 1489	Rev.	Sheet 1

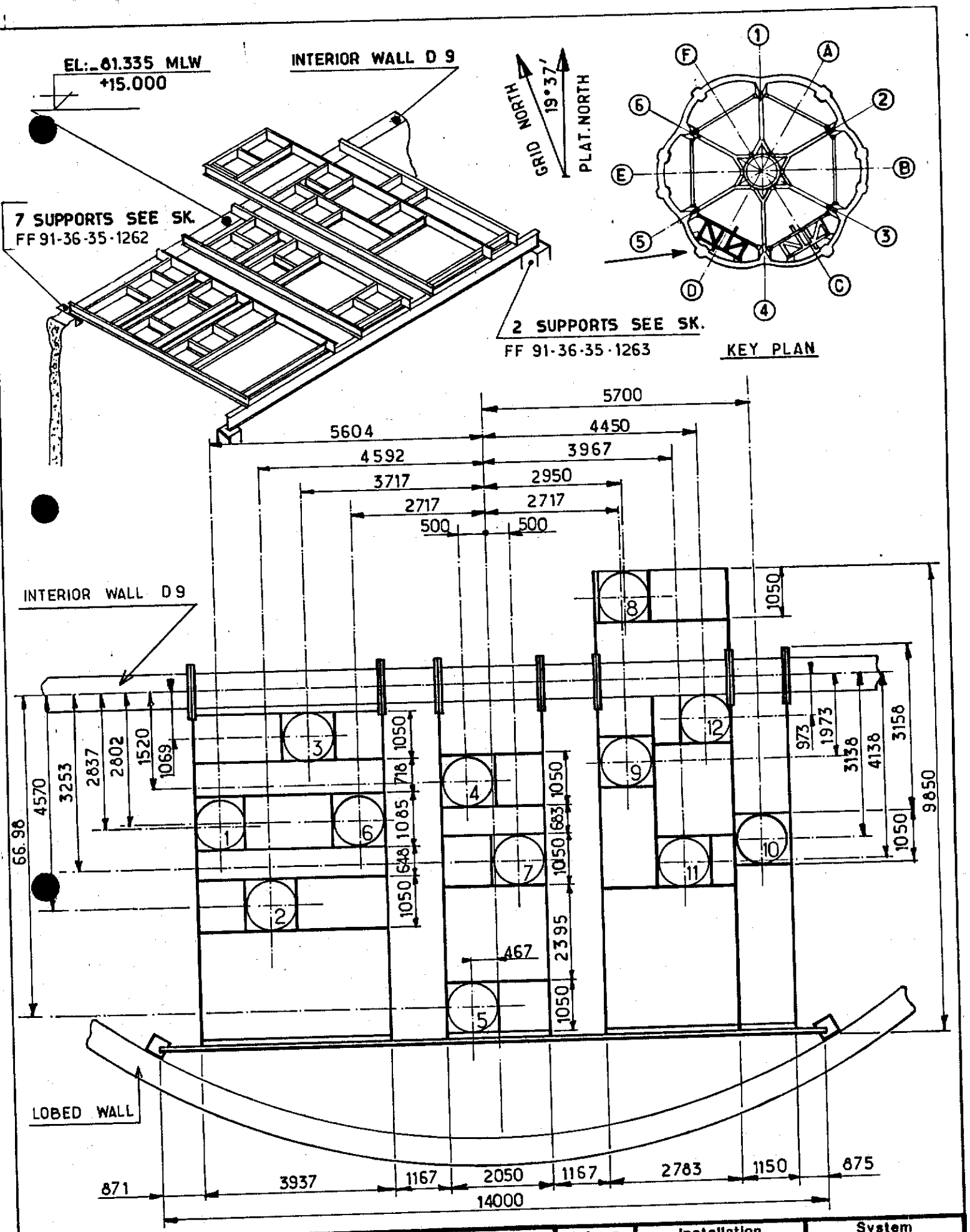

Rev.	Date	DESCRIPTION	by	app.
1	12.83	UP DATED	B.VH	I.LC

Contractor JVD 1029.40-160

elf aquitaine norge a/s
p.o.box 168
4001 Stavanger

elf
FRIGG FIELD

Job no.	Installation	System
	CDP 1	UNDERWATER

Scale 1:100

GENERAL VIEW OF GUIDE PRIMARY FRAME CELL D LEVEL "A"

Dwgr. no. FF_91_36.35.1490.

Rev. 1

Sheet /

Form 100.318

CDP 1 AS BUILT DRAWINGS

REFERENCE DRAWING LIST FOR: CONDUCTOR GUIDE FRAME

ORIGINATOR	CONSTRUCTION DRAWING REF.	TITLE	Rev	Sheet	Size
C. G. DORIS	A1-MP QF-1003	SUPPORT OF GUIDE PIPES LEVEL +15m	7		A1
" "	A1-MP-QF 1027	SUPPORT OF GUIDE PIPES +15m DETAILS			

ELF DRAWING NUMBER	REVISION Index	REVISION Date	TITLE

Rev.	Date	DESCRIPTION	by	app.

Contractor

elf aquitaine norge a/s
p.o.box 168
4001 Stavanger

elf
FRIGG FIELD

Job no.	Installation CDP 1	System UNDERWATER
Scale		
Dwgr. no. FF 1490	Rev.	Sheet /

Form 100.318

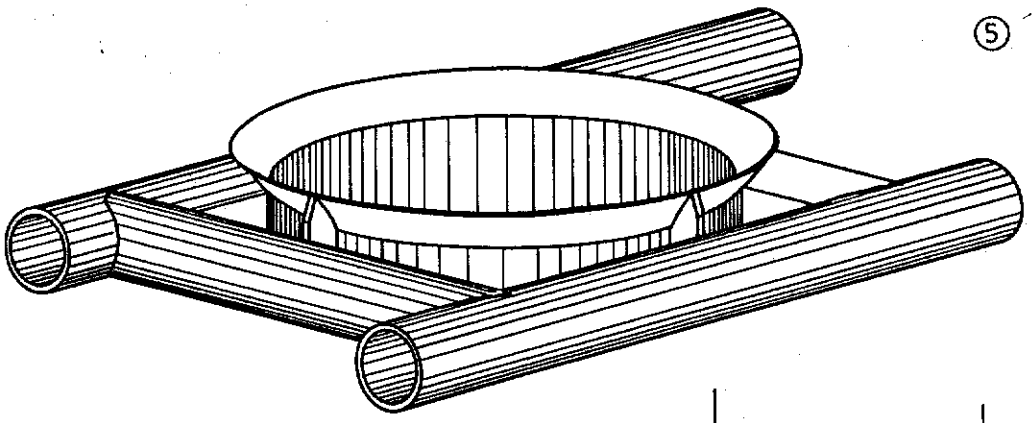

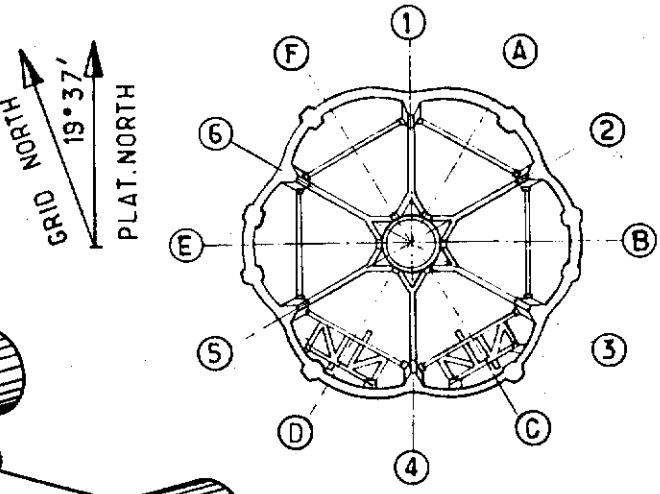

KEY PLAN

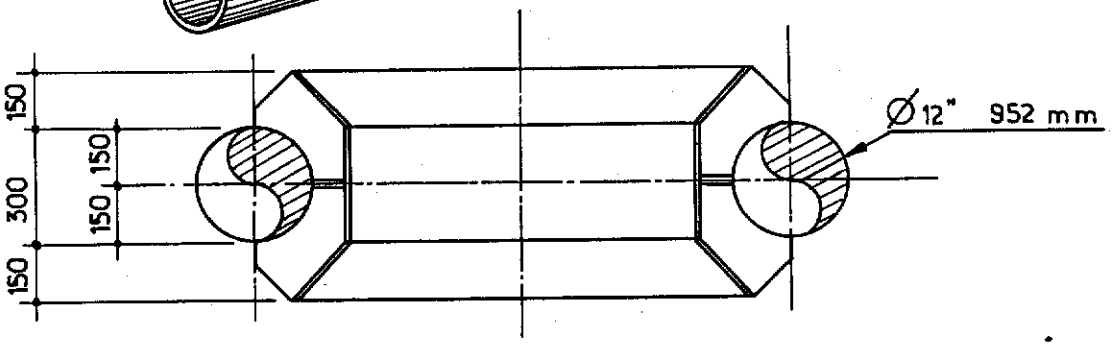

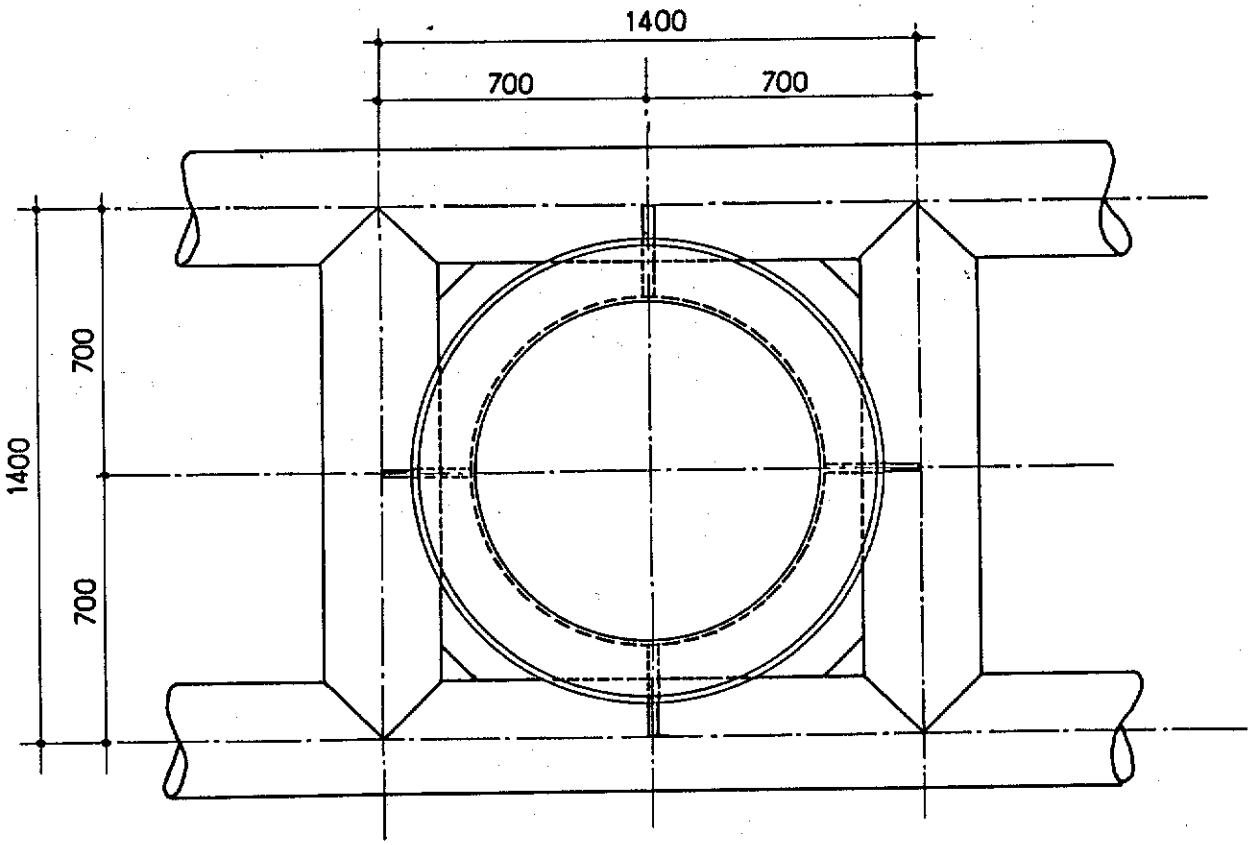

Rev.	Date	DESCRIPTION	by	app.
1	12,83	UP DATED	BY H	JLC

Contractor JVD 1029 40_161

elf aquitaine norge a/s
p.o.box 168
4001 Stavanger

elf

FRIGG FIELD

Job no.	Installation	System
	CDP 1	UNDERWATER

Scale 1/20°

CONDUCTOR SLEEVE
TYPICAL DETAIL

Dwgr. no. FF 91 36 35 1491

Rev 1

Sheet /

Form 103 218

CDP 1 AS BUILT DRAWINGS

REFERENCE DRAWING LIST FOR: CONDUCTOR GUIDE FRAME

ORIGINATOR	CONSTRUCTION DRAWING REF.	TITLE	Rev	Sheet	Size
C.G. DORIS	AL-MP QF 1061	DETAILS OF CONDUCTOR SLEEVE	1		A1

ELF DRAWING NUMBER	REVISION Index	REVISION Date	TITLE

Rev.	Date	DESCRIPTION	by	app.

Contractor

elf aquitaine norge a/s
p.o.box 168
4001 Stavanger

elf

FRIGG FIELD

Job no.	Installation	System
	CDP 1	UNDERWATER
Scale		
Dwgr. no. FF ___ ___ 1491	Rev.	Sheet /

Form 100 319

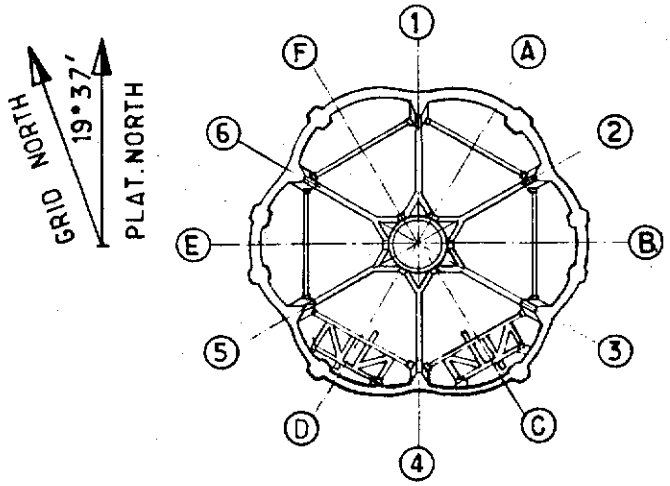

KEY PLAN

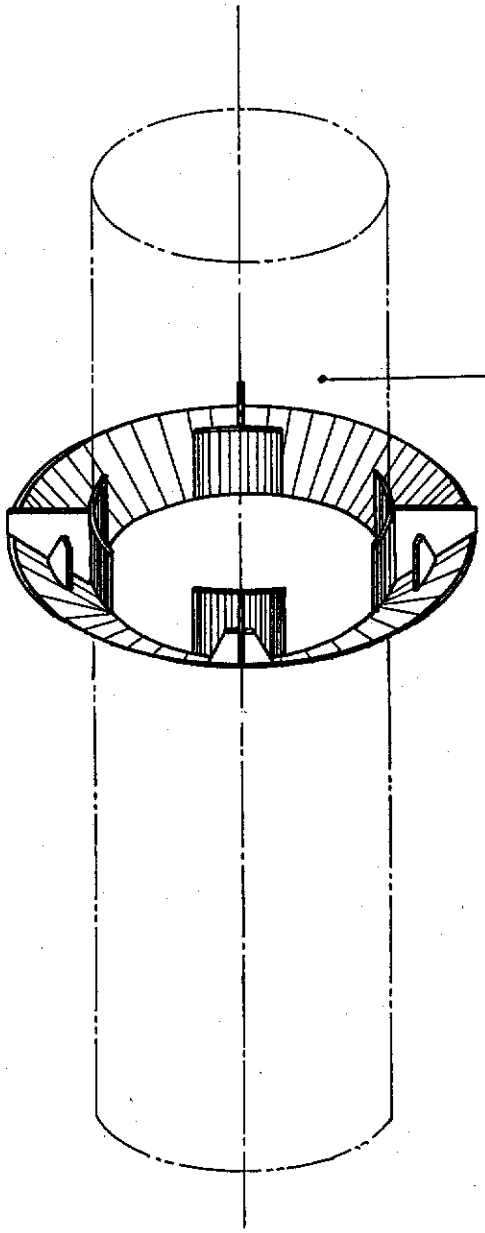

NOTES

- SEE ALSO GENERAL COMMENTS CHAPTER IV

Rev.	Date	DESCRIPTION	by	app.
1	1283	UP DATED	BVH	JLC

Contractor JVD 1029 40_162

elf aquitaine norge a/s
p.o.box 168
4001 Stavanger

elf
FRIGG FIELD

Job no.	Installation	System
	CDP 1	UNDERWATER
Scale	CONDUCTOR PIPE CASING TYPICAL LOCKING DEVICE	
Dwgr. no. FF_91.36.35_1492.	Rev 1	Sheet /

Form 101 318

CDP 1 AS BUILT DRAWINGS

REFERENCE DRAWING LIST FOR: CONDUCTOR GUIDE FRAME

ORIGINATOR	CONSTRUCTION DRAWING REF.	TITLE	Rev	Sheet	Size
C. G. DORIS	FROM PHOTOGRAPHIC REPORT.				

ELF DRAWING NUMBER	REVISION Index	REVISION Date	TITLE

Rev.	Date	DESCRIPTION	by	app.

Contractor

elf aquitaine norge a/s
p.o.box 168
4001 Stavanger

elf

FRIGG FIELD

Job no.	Installation	System
	CDP 1	UNDERWATER
Scale		
Dwgr. no. FF ___ ___ 1492	Rev.	Sheet /

Form 100 318

—CONDUCTOR SLEEVES— (AT SLAB LEVEL)

TYPE 1 : 1. 2. 3. 6. 8. 9. 10. 11. 12. 13. 14. 15. 17. 18. 21 AND 24.(SK. FF 91 36 35 1498)

TYPE 2 : 4. 5. 7. 16. 19 AND 20.(SK. FF 91 36 35 1499)

TYPE 3 : 22 AND 23.(SK. FF 91 36 35 1500)

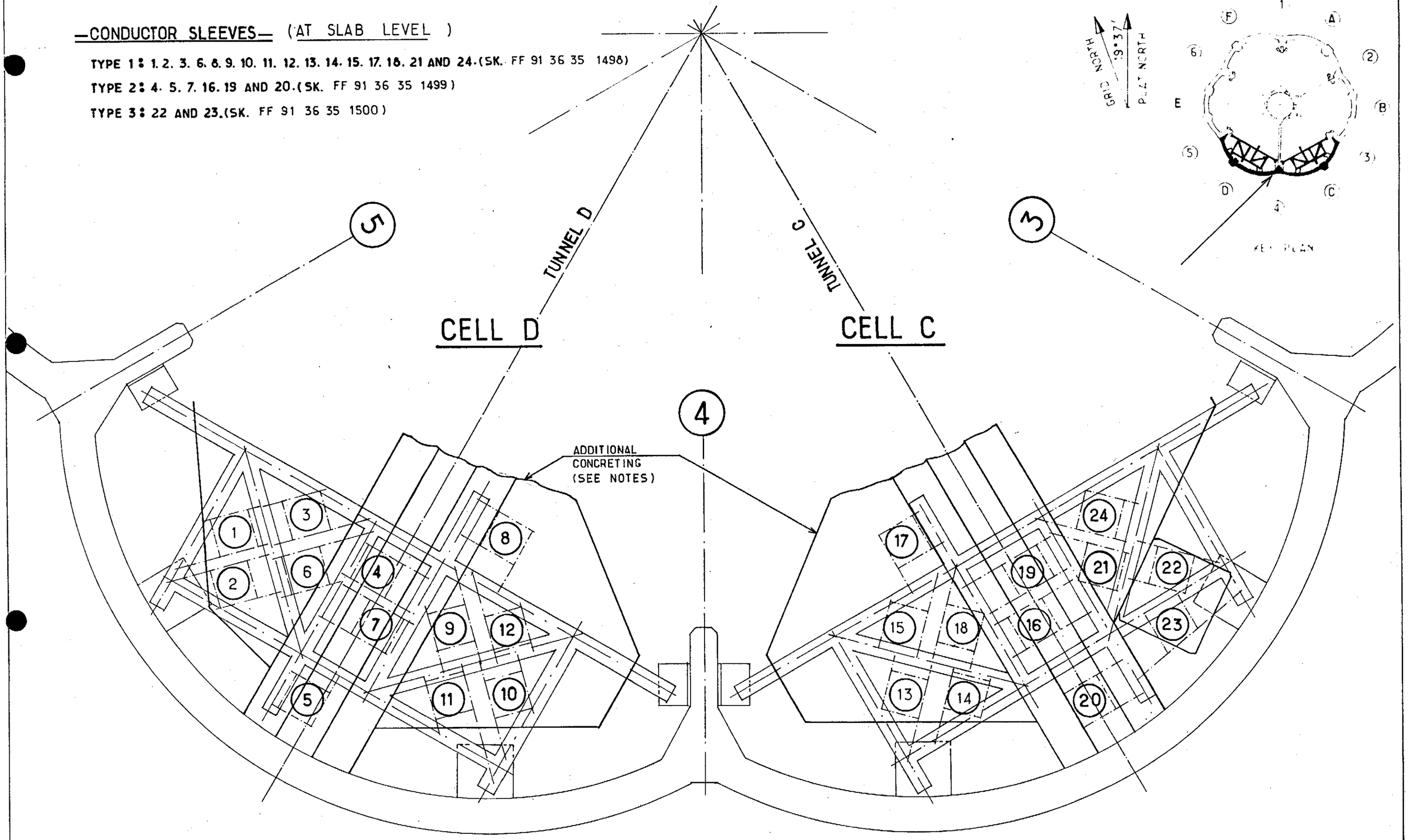

NOTES

FOR ADDITIONAL CONCRETING SEE QR 20 32 ET QR 20 33 (rev 3).

Rev.	Date	DESCRIPTION	by	app
1	12.83	UP DATED	BVH	JLC

Contractor JVD_1029_40_167.

elf aquitaine norge a/s
p.o box 168
4001 Stavanger

elf

FRIGG FIELD

Job no.	Installation	System
	CDP 1	UNDERWATER
Scale —	CONDUCTOR SLEEVES GENERAL PLAN VIEW CELL C & D	
Dwgr no. FF 91.36.35.1497.	Rev. 1	Sheet

CDP 1 AS BUILT DRAWINGS

REFERENCE DRAWING LIST FOR: CONDUCTOR GUIDE FRAME

ORIGINATOR	CONSTRUCTION DRAWING REF.	TITLE	Rev	Sheet	Size
C. G. DORIS	A1-MP-QF-1003	SUPPORT OF GUIDE FRAME AT LEVEL +15m	7		A1
" "	A1-MP-QF-1028	SUPPORT OF GUIDE PIPE +15m DETAIL	2		A1

ELF DRAWING NUMBER	REVISION Index	REVISION Date	TITLE

Rev.	Date	DESCRIPTION	by	app.

Contractor

elf aquitaine norge a/s
p.o.box 168
4001 Stavanger

elf

FRIGG FIELD

Job no.	Installation	System
	CDP 1	UNDERWATER
Scale		
Dwgr. no. FF 1497	Rev.	Sheet /

Form 100.318

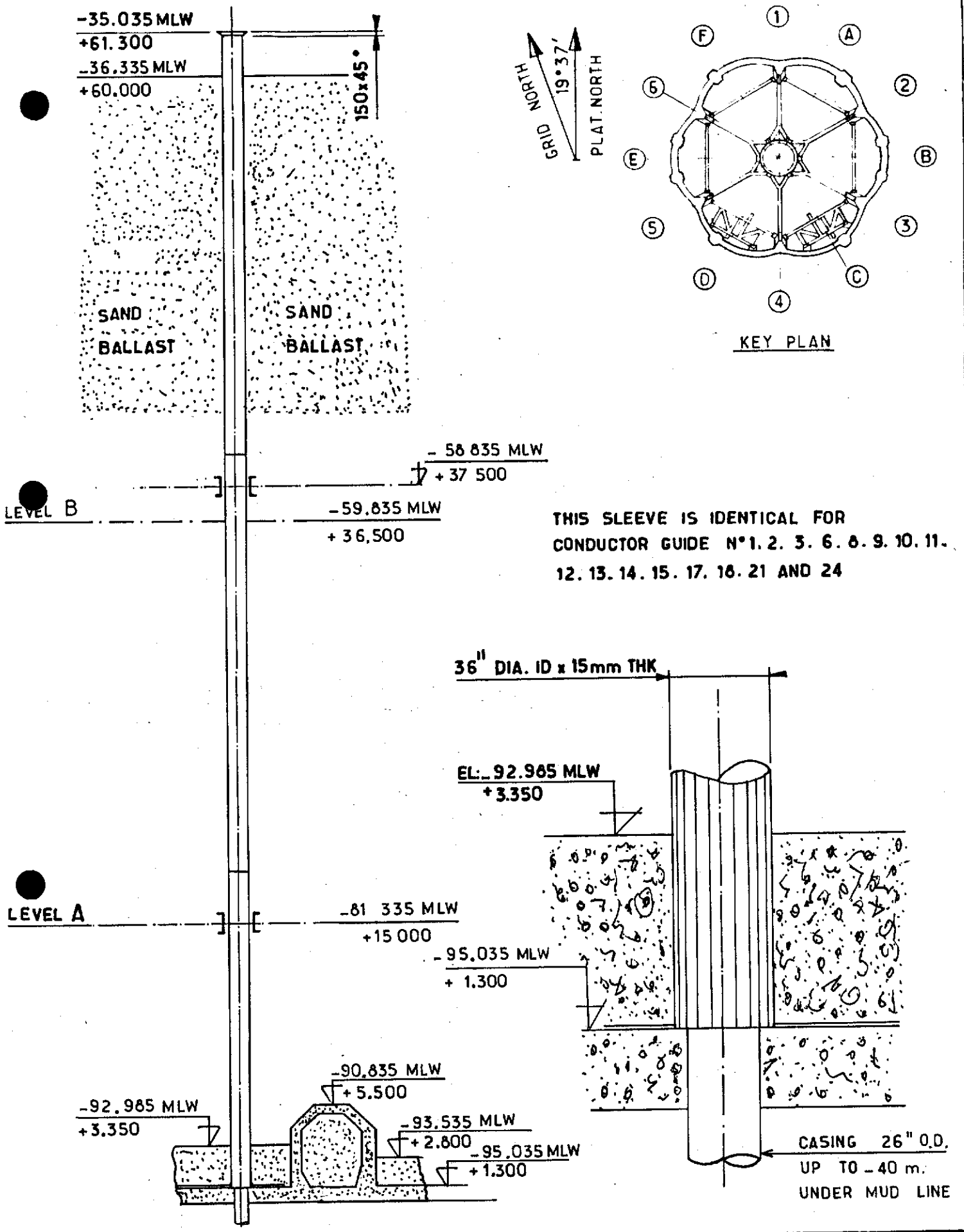

Rev.	Date	DESCRIPTION	by	app.
1	12.83	UP DATED	BVH	HC

Contractor JVD 1029_40.168

elf aquitaine norge a/s
p.o.box 168
4001 Stavanger

elf
FRIGG FIELD

Job no.	Installation	System
	CDP 1	UNDERWATER

Scale 1:25

CONDUCTOR SLEEVE TYPE 1 DETAIL

Dwgr. no FF 91_36.35.1498_

Rev. 1

Sheet /

CDP 1 AS BUILT DRAWINGS

REFERENCE DRAWING LIST FOR: CONDUCTOR GUIDE FRAME

ORIGINATOR	CONSTRUCTION DRAWING REF.	TITLE	Rev	Sheet	Size
C. G. DORIS	A1. MP. QF 1023	LOCATION OF CONDUCTOR SLEEVES IN CELL D	1		A1
" "	A1. MP. QF 1024	LOCATION OF CONDUCTOR SLEEVES IN CELL C	1		A1
" "	A1. MP. QF 1025	VERTICAL VIEW OF CONDUCTOR SLEEVES	1		A1
" "	A1. MP. QF 1029	GUIDE FOR CONDUCTOR SLEEVES ON TOP OF TUNNEL C	1		A1
" "	A1. MP. QF 1030	GUIDE FOR CONDUCTOR SLEEVES ON TOP OF TUNNEL D	1		A1
"	A1. MP. QF 1114	FEMALE CONE OF ENTRANCE ON THE CONDUCTOR SLEEVES	1		A1

ELF DRAWING NUMBER	REVISION Index	REVISION Date	TITLE

Rev.	Date	DESCRIPTION	by	app.

Contractor

elf aquitaine norge a/s
p.o.box 168
4001 Stavanger

elf

FRIGG FIELD

Job no.	Installation CDP 1	System UNDERWATER
Scale		
Dwgr. no. EE 1498	Rev	Sheet /

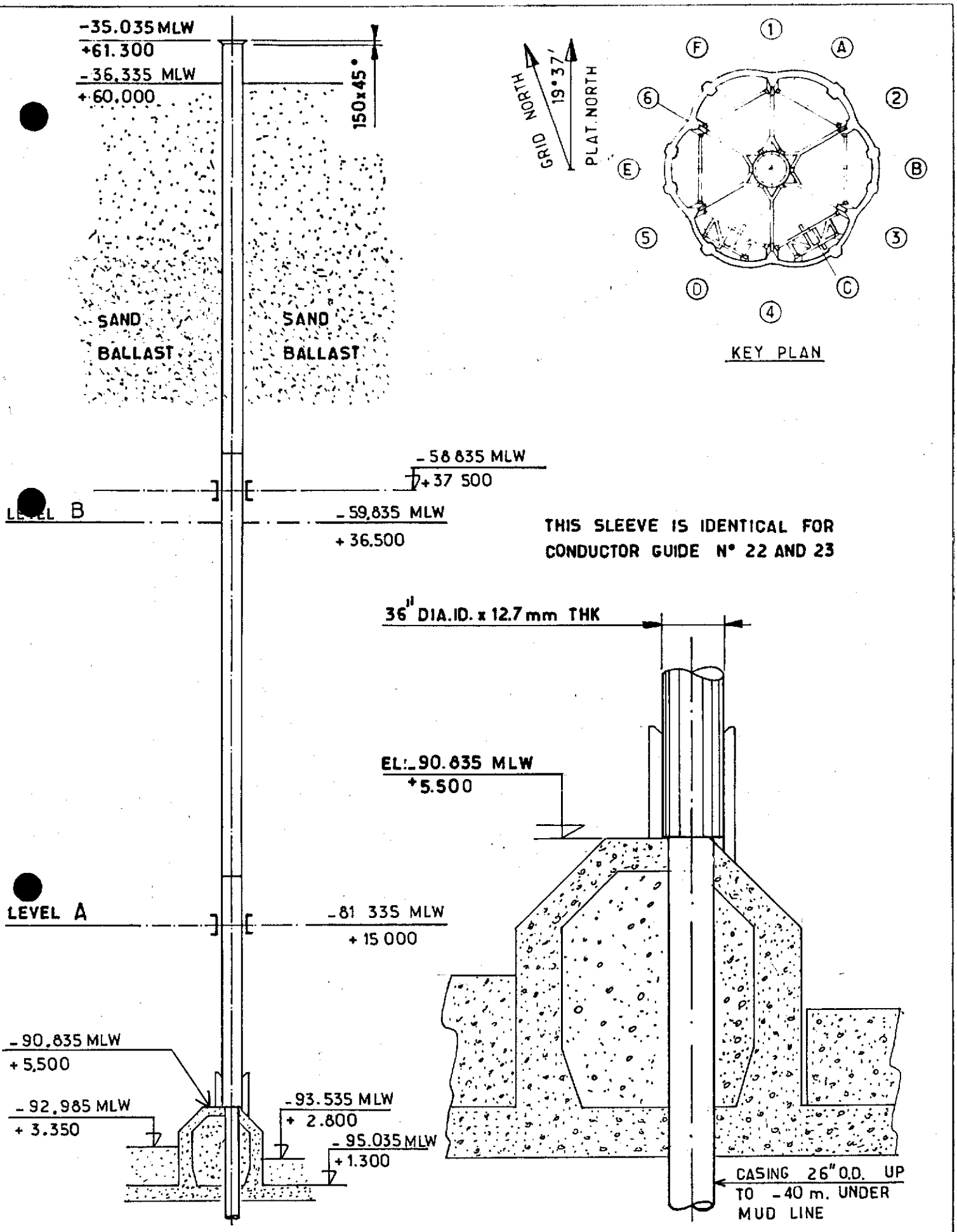

Rev.	Date	DESCRIPTION	by	app.
1	12.83	UP DATED	B.V.H	ALC

Contractor JVD 1029_40.169

elf aquitaine norge a/s
p.o.box 168
4001 Stavanger

elf
FRIGG FIELD

Job no.	Installation	System
	CDP 1	UNDERWATER
Scale 1:25	CONDUCTOR SLEEVE TYPE 2 DETAIL	
Dwgr. no FF_91_36_35_1499_	Rev. 1	Sheet

CDP 1 AS BUILT DRAWINGS

REFERENCE DRAWING LIST FOR: CONDUCTOR GUIDE FRAME

ORIGINATOR	CONSTRUCTION DRAWING REF.	TITLE	Rev	Sheet	Size
C. G. DORIS	A1- MP- ØF 1023	LOCATION OF CONDUCTOR SLEEVES IN CELL D	1		A1
" "	A1- MP- ØF 1024	LOCATION OF CONDUCTOR SLEEVES IN CELL C	1		A1
" "	A1- MP- ØF 1025	VERTICAL VIEW OF CONDUCTOR SLEEVES	1		A1
" "	A1- MP- ØF 1029	GUIDE FOR CONDUCTOR SLEEVES ON TOP OF TUNNEL C	1		A1
" "	A1- MP- ØF 1030	GUIDE FOR CONDUCTOR SLEEVES ON TOP OF TUNNEL D	1		A1
" "	A1- MP- ØF 1114	FEMALE CONE OF ENTRANCE ON THE CONDUCTOR SLEEVES	1		A1

ELF DRAWING NUMBER	REVISION Index	REVISION Date	TITLE

Rev.	Date	DESCRIPTION	by	app.

Contractor

elf aquitaine norge a/s
p.o.box 168
4001 Stavanger

elf

FRIGG FIELD

Job no.	Installation CDP 1	System UNDERWATER
Scale		
Dwgr. no. FF 1149	Rev.	Sheet

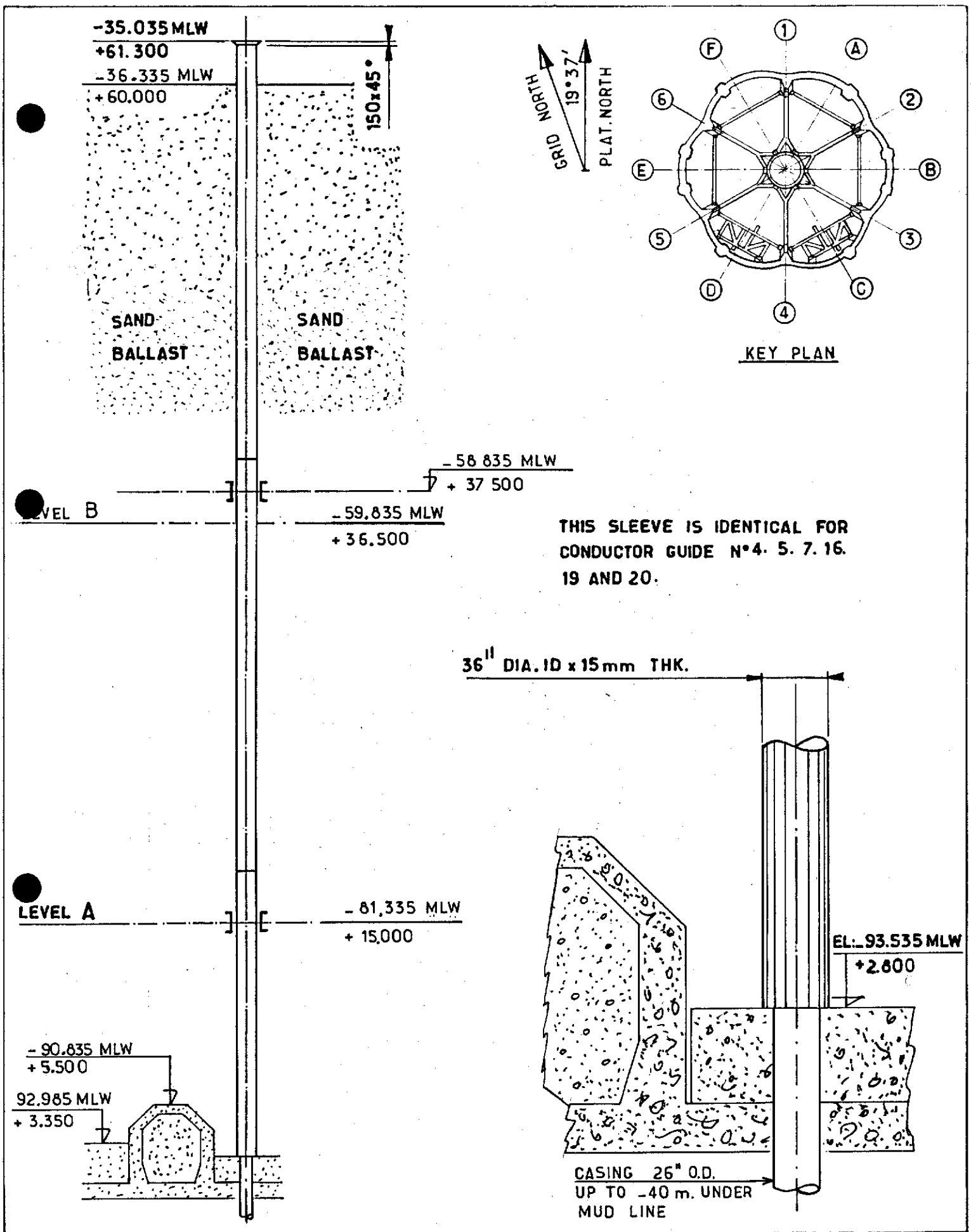

Rev.	Date	DESCRIPTION	by	app.
1	12.83	UP DATED	B.V.H	H.C

Contractor JVD 1029_40.170

elf aquitaine norge a/s
p.o.box 168
4001 Stavanger

elf
FRIGG FIELD

Job no.	Installation	System
	CDP 1	UNDERWATER
Scale 1:25	CONDUCTOR SLEEVE TYPE 3 DETAIL	
Dwgr. no. FF_91_36_35_1500_	Rev 1	Sheet /

CDP 1 AS BUILT DRAWINGS

REFERENCE DRAWING LIST FOR: CONDUCTOR GUIDE FRAME

ORIGINATOR	CONSTRUCTION DRAWING REF.	TITLE	Rev	Sheet	Size
C. G. DORIS	A1. MP. ØF 1023	LOCATION OF CONDUCTOR SLEEVES IN CELL D	1		A1
" "	A1. MP. ØF 1024	LOCATION OF CONDUCTOR SLEEVES IN CELL C	1		A1
" "	A1. MP. ØF 1025	VERTICAL VIEW OF CONDUCTOR SLEEVES	1		A1
" "	A1. MP. ØF 1029	GUIDE FOR CONDUCTOR SLEEVES ON TOP OF TUNNEL C	1		A1
" "	A1. MP. ØF 1030	GUIDE FOR CONDUCTOR SLEEVES ON TOP OF TUNNEL D	1		A1
"	A1. MP. ØF 1114	FEMALE CONE OF ENTRANCE ON THE CONDUCTOR SLEEVES	1		A1

ELF DRAWING NUMBER	REVISION Index	REVISION Date	TITLE

Rev.	Date	DESCRIPTION	by	app.

Contractor

elf aquitaine norge a/s
p.o.box 168
4001 Stavanger

elf

FRIGG FIELD

Job no.	Installation CDP 1	System UNDERWATER
Scale		
Dwgr. no. FF ___ ___ 1500	Rev.	Sheet /

Form 100.318

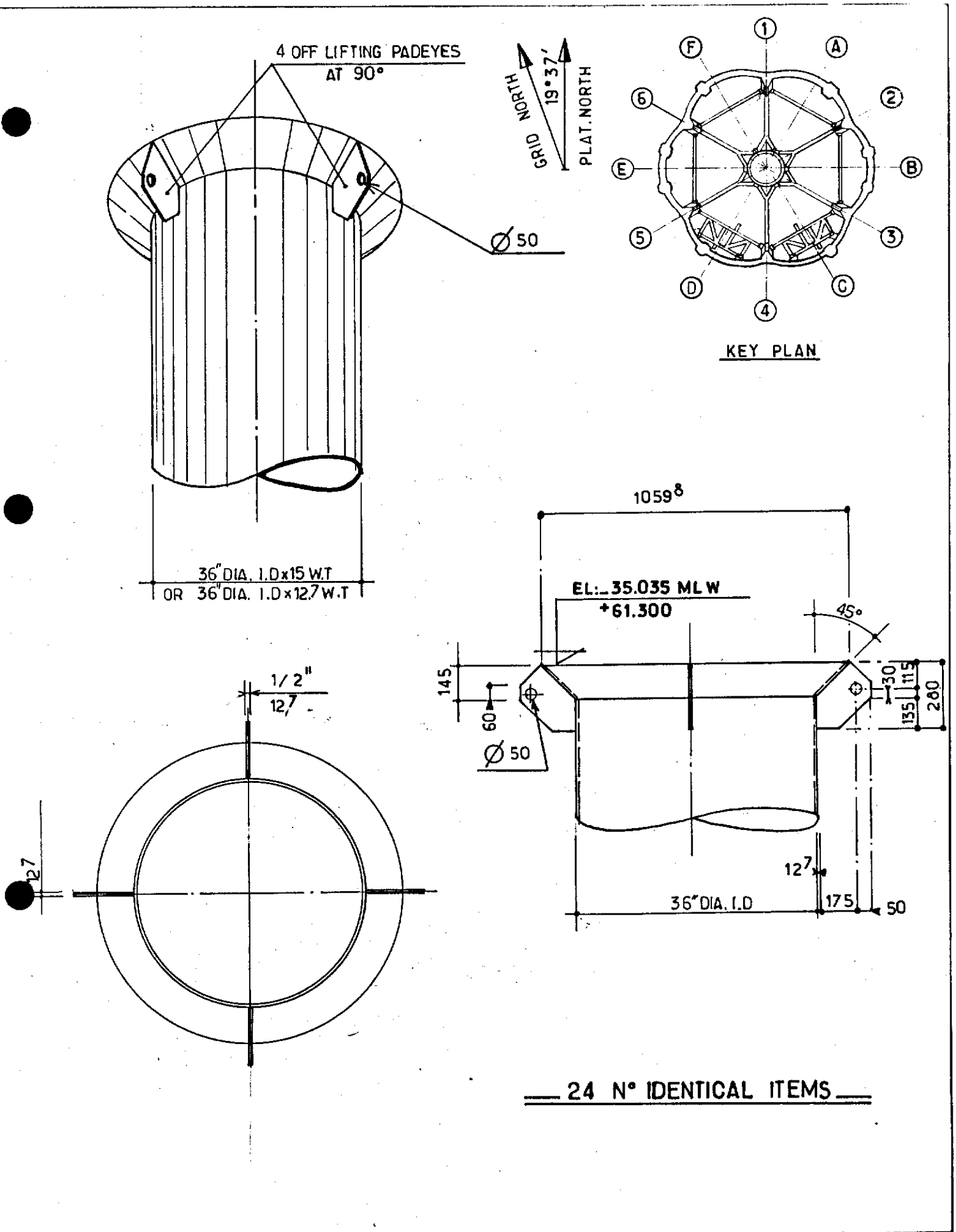

Rev.	Date	DESCRIPTION	by	app.
1	1283	UP DATED	BVH	JLC

Contractor JVD 1029_40.171_

elf aquitaine norge a/s
p.o.box 168
4001 Stavanger

elf
FRIGG FIELD

Job no.	Installation	System
	CDP 1	UNDERWATER
Scale 1:25	CONDUCTOR SLEEVE FUNNEL	
Dwgr. no. FF-91-36-35-1501-	Rev 1	Sheet /

CDP 1 AS BUILT DRAWINGS

REFERENCE DRAWING LIST FOR: CONDUCTOR GUIDE FRAME

ORIGINATOR	CONSTRUCTION DRAWING REF.	TITLE	Rev	Sheet	Size
C. G. DORIS	A1. MP. ØF 1023	LOCATION OF CONDUCTOR SLEEVES IN CELL D	1		A1
" "	A1. MP. ØF 1024	LOCATION OF CONDUCTOR SLEEVES IN CELL C	1		A1
" "	A1. MP. ØF 1025	VERTICAL VIEW OF CONDUCTOR SLEEVES	1		A1
" "	A1. MP. ØF 1029	GUIDE FOR CONDUCTOR SLEEVES ON TOP OF TUNNEL C	1		A1
" "	A1. MP. ØF 1030	GUIDE FOR CONDUCTOR SLEEVES ON TOP OF TUNNEL D	1		A1
" "	A1. MP. ØF 1114	FEMALE CONE OF ENTRANCE ON THE CONDUCTOR SLEEVES	1		A1

ELF DRAWING NUMBER	REVISION Index	REVISION Date	TITLE

Rev.	Date	DESCRIPTION	by	app.

Contractor

elf aquitaine norge a/s
p.o.box 168
4001 Stavanger

elf

FRIGG FIELD

Job no.	Installation	System
	CDP 1	UNDERWATER
Scale		
Dwgr. no. FF 1501	Rev	Sheet