elf norge a.s
dwg no. FF 931.210.004
rev. 0 date 09.10.74

DWG NO.	SHEET NO.
ELN02020	101

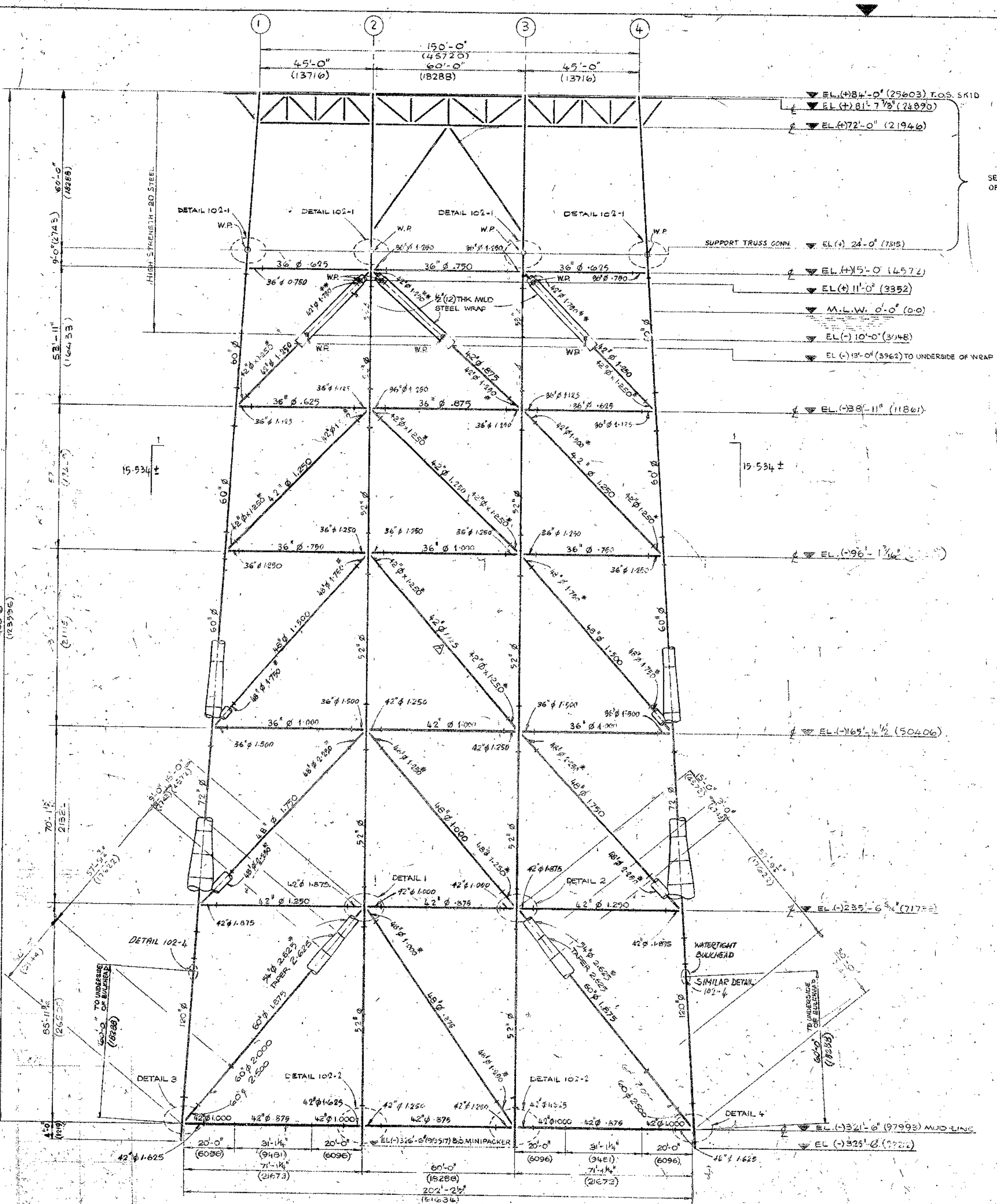

JACKET VERTICAL FRAMING AT COL. LINE 'A'

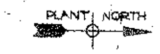

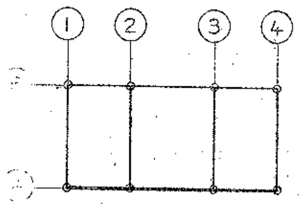

KEY PLAN

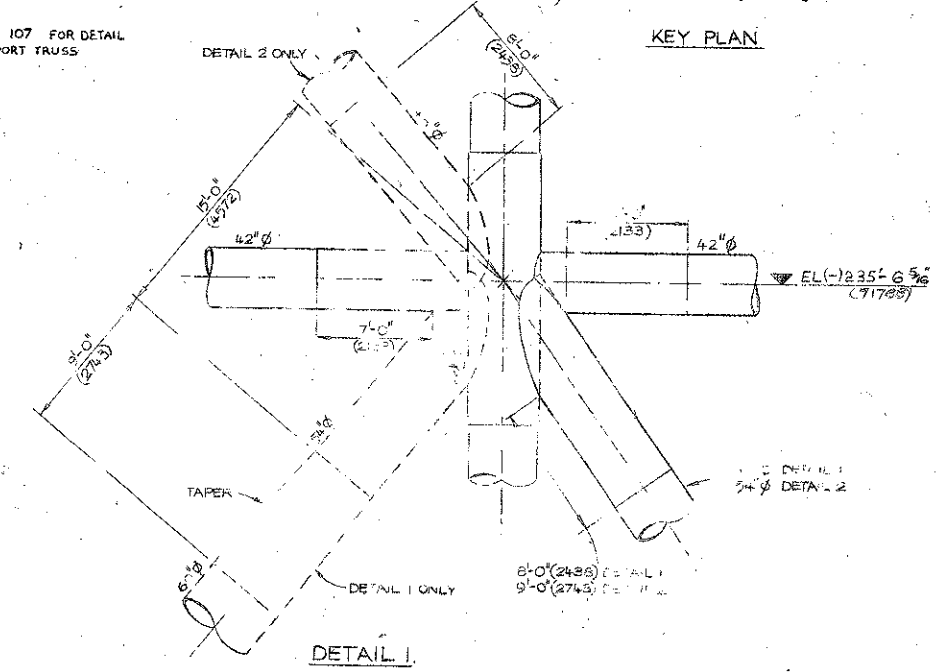

DETAIL 1.
DETAIL 2 A...
SCALE :- ¼" : 12"

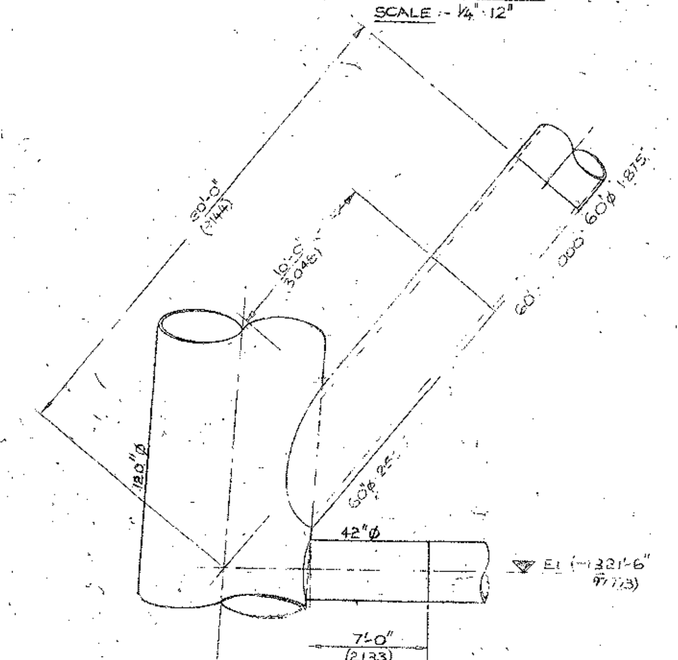

DETAIL 3.
DETAIL 4 OPP. HAND
SCALE:- ¼" : 12"

NOTES:-
1) DIMENSIONS IN BRACKETS ARE METRIC EQUIVALENT IN MILLIMETRES.
2) ALL MATERIAL THIS SHEET TO BE HIGH STRENGTH STEEL UNLESS NOTED
3) [illegible]
4) [illegible] TO BE SPECIAL HIGH STRENGTH STEEL
5) [illegible] HIGH STR[illegible]
6) AFTER INSTALLATION OF SPLASH ZONE WRAP COMPLETED TIGHTNESS OF WELDS TO BE CONFIRMED BY PRESSURING U/WRAP TO 10 P.S.I.G. & SOAP TESTING
7) WRAP TO BE SEAL WELDED TOP & BOTTOM & MAKE-UP LENGTHS FABRICATED WITH SEAM WELDS OFFSET BY 90°

REF DWGS:-
MC D-H DWGS :-
JACKET VERTICAL FRAMING AT COL LINE B — ELN02020 SHT 102

SCALES:-
1/16" : 12"
¼" : 12"
½" : 12"

FF. 931.210.004
0 09.10.74

FAB. STDS. REQ'D. THIS SHT.

MK	BY	DATE	REVISIONS
7	CAP	19-3-73	42"Ø 1.125 WAS 42"Ø .875
6			NOTE 7 ADDED; ... 57'-9¾" WAS 57'-3½"
5			DETAIL 1 54"Ø ...
4	JJ	30.5.73	57'-9¾" WAS 62'-9¾" ...
3	CAP	19-4-73	CHANGE FROM 26¼ TO 50 Ø CONDUCTORS
2	RG	5-3-73	ADD HIGH STRENGTH ...
1			

ENGINEERS APPROVAL

ELF-NORGE A/S
NORWAY

24 WELL SELF CONTAINED
DRILLING PLATFORM No 1
NORTH SEA — FRIGG FIELD — WD 98 M

McDERMOTT – HUDSON
LONDON — ENGLAND

DWG. NO. ELN02020 — SHEET NO. 101