DECEMBER 1977

FRIGG FIELD

TREATMENT AND COMPRESSION PLATFORM No. 2

CONTRACT S. 131

PROJECT 2169

VOLUME 1

BOOK 1

PROJECT DESCRIPTION

SCF053

elf

McDERMOTT HUDSON ENGINEERING

TCP2 - F - 201 - 8

SCF 053

TCP2 JOB BOOK

VOLUME 1

PROJECT DESCRIPTION

PHOTOGRAPH OF

TREATMENT AND COMPRESSION PLATFORM NO. 2


25/1-FRIGG
TCP2

TCP 2 JOB BOOK

VOLUME 1

PROJECT DESCRIPTION

TABLE OF CONTENTS OF VOLUME 1

TCP2 JOB BOOK

VOLUME 1

PROJECT DESCRIPTION

TABLE OF CONTENTS OF VOLUME 1

SECTION 1 GENERAL

1.1 Description of the Consortium

1.2 Description of the Frigg Field

1.2.1 General information on the Frigg Field and connected projects

1.2.2 Sketch of Frigg Field and the connected projects

1.3 Distribution of work between the prime contractors

SECTION 2 DESCRIPTION OF TCP2

2.1 General Drawings and Plot Plans

2.2 General Description of the Platform

SECTION 3 GENERAL DATA

3.1 Climatic and Sea Data

SECTION 4 PRINCIPLES OF DESIGN

4.1 Principles of Electrical, Instrument and Mechanical Design

4.2 Interconnections between Platforms

4.2.1 Utilities Interconnections

4.2.2 Electrical Interconnections

4.2.3 Instrument Interconnections

4.2.4 Communication

4.3 Main P & I D 's

4.4 Single Wire Diagrams

SECTION 5 NUMBERING SYSTEM FOR DOCUMENTS

5.1 Drawing Numbering System

5.2 Specification, Requisition and Purchase Order Numbering System

5.3 Equipment Tag Numbering System

SECTION 6 TABLE OF CONTENTS OF THE JOB BOOK

6.1 How to Use the Tables

6.2 Table of Contents for Volumes 1,2,3,4 and 5

SECTION 7 DISTRIBUTION LIST FOR THE JOB BOOKS

1

GENERAL

Volume I of this Job Book has been written to show the extent of the Frigg Field project in general. It also gives general drawings, description of the Platform and the principles of design.

Description of the Consortium

1.1 Description of the Consortium

The median line between the United Kingdom and Norwegian sectors of the North Sea Continental Shelf passes through the Frigg Field. However, it has been agreed by the various parties involved that the Frigg Field is developed as a single entity. The percentage equity in the consortium has been based on an independant study of the distribution of the field between the two areas (approximately 60% Norway and 40% United Kingdom).

The consortium consists of the following companies, each company being liable only to the extent of its equity in the said consortium.

Elf Oil Exploration and Production (UK) Ltd	17.40%
Aquitaine Oil (UK) Ltd	8.70%
Total Oil Marine	13.06%
Norsk Hydro Produksjon A/S	19.99%
Den Norske Stats Oljeselakap A/S	3.04%
Elf Aquitaine Norge A/S	25.19%
Total Marine Norsk A/S	12.59%

The above percentages are approximate and subject to the parters approval.

Description of the Frigg Field

1.2 Description of Frigg Field

Located in the northern area of the North Sea, at the 60th parallel and midway between the South Shetlands and Bergen, the Frigg Gas Deposit straddles the boundary-line between the British and Norwegian Continental Shelf areas. The depth of water at this point is approximately 100 meters.

The field was discovered in July 1971 by Elf Norge, operating the Franco-Norwegian partnership known as Petronord, owner of the rights on the Norwegian side (block 25-1), this discovery was confirmed in May 1972 by Total Oil Marine, operator of the group which holds the rights on the British side (block 10-1).

Following the large outputs (700,000 m^3/day) of dry, sulphur free gas (in the region of 95% methane and 4% ethane)which were obtained during preliminary tests, new drillings were carried out and these confirmed the extent of the deposit. This was declared "commercial" in April 1972.

The partners of the Consortium have agreed upon a division of responsibility for operational tasks and a sharing of production. Elf Norge is the operator for all the offshore installation on the field and is responsible for the production and treatment of the gas. Total Oil Marine is responsible for transportation of the gas from Frigg to Scotland together with the operation of the Manifold Compression Platform and the onshore terminal at St. Fergus.

The gas is extracted from the pay zone by the two drilling platforms (CDP1 and DP2), each having 24 wells in 2 clusters of 12 each. There it undergoes de-sanding and initial liquid separation prior to being passed to the treatment complex. CDP1 is connected to TP1 and DP2 to TCP2 each by two 26" subsea-lines.

On the treatment platforms the gas is processed in any 2 of 3 parallel streams, the third stream acting as a 'stand-by'. In each stream, gas firstly passes through a Free Water Knock Out Separator, which separates gas and free condensed liquid or slugs (from the subsea-lines); then it is scrubbed with triethylene glycol in a Contactor to give a dew point of at least - $5^{o}C$, from which it passes through a pressure reset flow control scheme; the three dry gas streams then combine into a Scottish sales gas header prior to leaving the treatment complex via a 32" subsea-line to Scotland. Each Contactor is provided with high purity glycol from a 'Glycol Regeneration Unit'. This unit removes water, hydrocarbon liquid and gas from impure glycol received from the contactor.

Condensate produced by liquid separation on the treatment platform together with that received from the drilling platform via a 4" subsea-line is treated to decrease the water content to below 50 ppm before being injected into the 2-phase flow 32" sales gas line.

The planned production rate for normal operation of the complete complex is 15 billion cubic meters annually.

General information on the Frigg Field and connected projects

1.2.1 GENERAL INFORMATION

1.2.1.1 Location

Frigg Field is located between 59° 48' and 59° 60' longitude North and between 1° 97' and 2° 15' longitude East

Distance from Norwegian Coast	190 Km
Distance from Shetland Islands	180 Km
Distance from Scottish Coast	360 Km

1.2.1.2 Deposit Characteristics

Depth of reserves below sea level	1,900m
Water depth at deposit	100m
Gas Pressure	approximately 200 bars
Gas Temperature	approximately 60°C
Recoverable Reserves	over 200 billion m^3
Production Rate (annual)	15 billion m^3
Planned production life of field	approximately 20 years

1.2.1.3 Platforms located in Frigg Field.

There are a total of five platforms and one flare structure located on Frigg Field to produce and process the gas resource and house the personnel required to operate and maintain the platforms.
The platforms comprise of the following:-

In the British Zone -

Quarters Platform - 60 bedrooms for 120 personnel

Concrete Drilling Platform No 1 -
24 producing wells

Treatment Platform No 1 -
Treatment of 30 million m^3 of gas a day from CDP1 through two out of three process streams under normal operation, with a maximum of 45 mill. m^3 of gas a day through all three streams, prior to export to St. Fergus terminal by 32" pipeline.

Flare Structure - designed for relief of 1.5 million m^3 per hour of gas during any emergency on TP1 or TCP2 during production phase.

In Norwegian Zone

Drilling Platform No 2 -

24 producing wells.

Treatment Compression Platform No 2 -

Treatment of 30 million m^3 of gas a day from DP2 through two out of the three process streams under normal operation, with a maximum of 45 million m^3 of gas a day through all three streams, prior to export to St. Fergus terminal by 32" pipeline.

1.2.1.4 Manifold Compression Platform

Located 180 Km from Frigg, the intermediate platform (M.C.P.) has been installed to control and adjust the flow of gas and condensate within the two pipelines from TP1 and TCP2. This platform will also recompress the gas when the well head pressure drops.

1.2.1.5 St. Fergus terminal - Scotland.

The terminal point of the two Frigg Gas pipelines and the offtake point for the two pipelines for the delivery of gas to the British Gas Corporation is at St. Fergus - Scotland. This facility has been designed to process 60 million m^3 of gas per day under normal operation with a maximum of 90 million m^3 per day.

Sketch of Frigg Field and
the connected projects

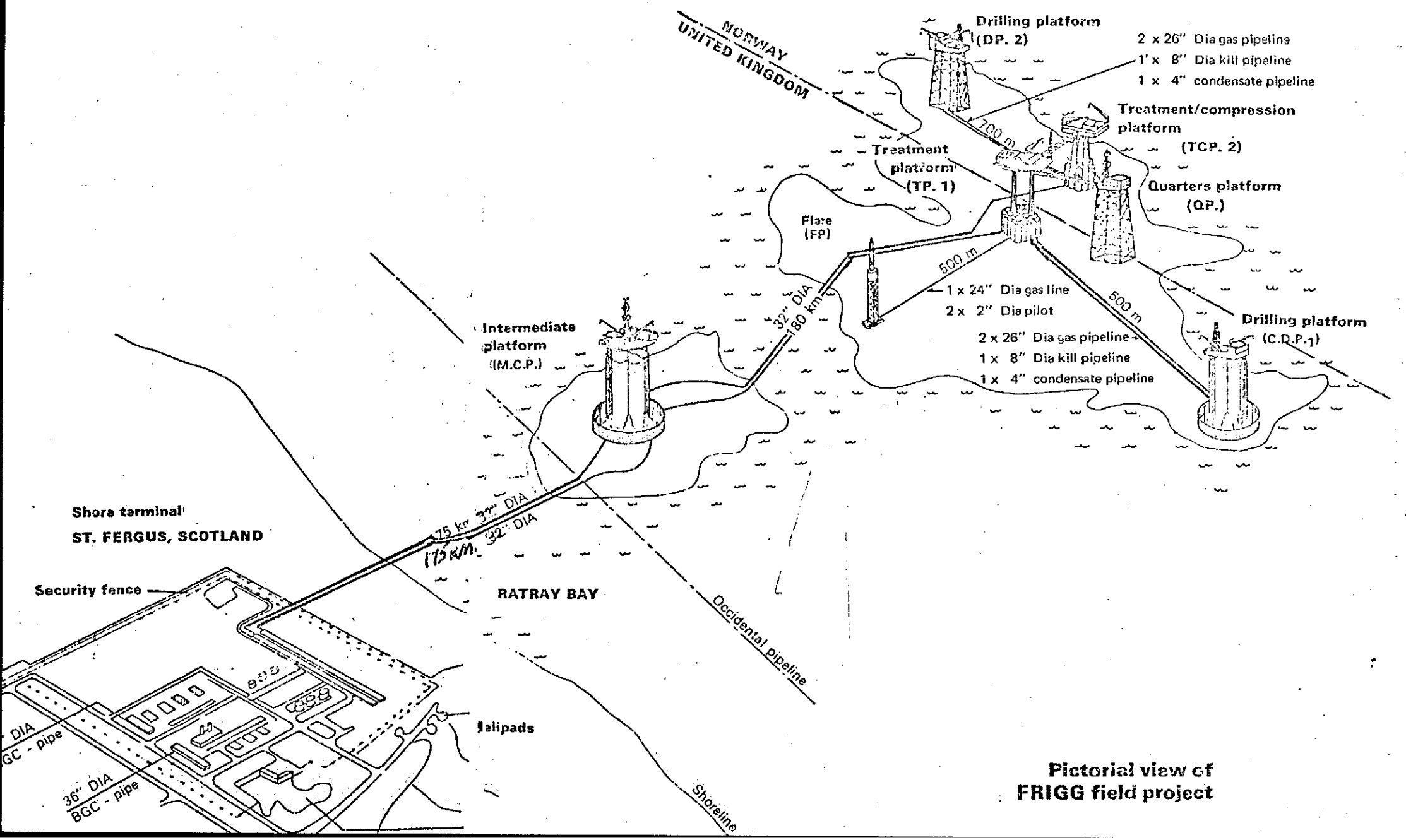

Pictorial view of FRIGG field project

Distribution of work between
the prime contractors

TCP2 JOB BOOK

VOLUME 1

PROJECT DESCRIPTION

Section 1.3

Platform Name	Design Contractor	Fabrication Contractor
QP - Modules	McDH	CDLG
Support Frame	McDH	UIE
Jacket	McDH	UIE
TP1 - Modules	McDH	MME
Support Frame	McDH	CMP
Concrete Gravity Base Structure	Sea Tank Co	Sea Tank Co/ McAlpine
CDP1 - Modules	Lummus/B & R	UIE
Concrete Gravity Base Structure	DORIS	DORIS
TCP2 - Module	McDH *	SPIE/VIGOR
Support Frame	KVEARNER	CMP/UIE/AKER
Concrete Gravity Base Structure	Norwegian Contractors	Norwegian Contractors
DP2 - Modules	Lummus	UIE
Support Frame	McDH	UIE
Jacket	McDH	UIE
Flare Stack	EMH/ACB	CFEM

* McDH also Managing Contractor

2

General Drawings and Plot Plans

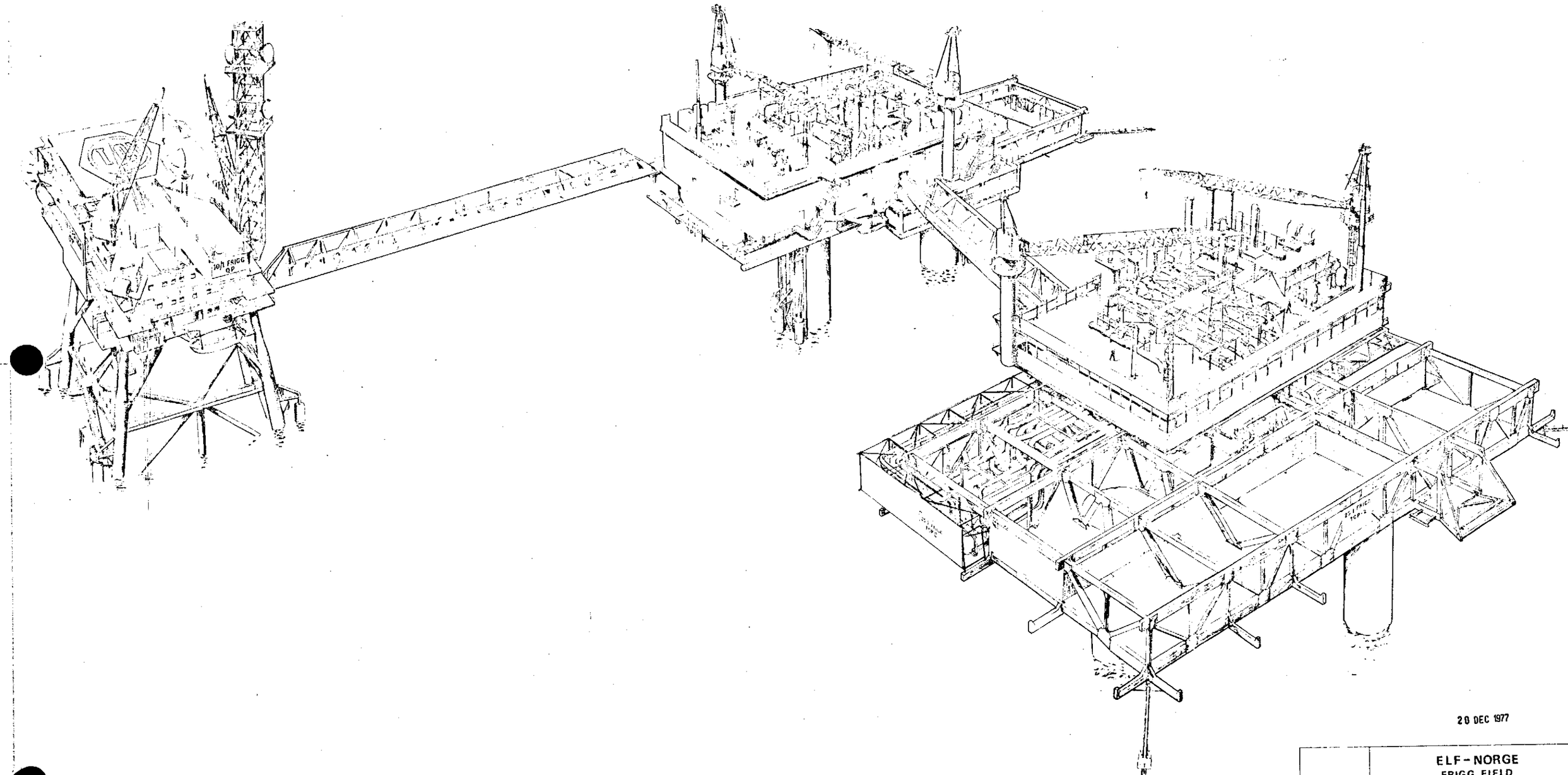

20 DEC 1977

ELF-NORGE
FRIGG FIELD

TREATMENT / COMPRESSION COMPLEX
FRIGG FIELD NORTH SEA

OCEANIC CONTRACTORS INC.

DRAWN BY	SCALE	DATE	DWG NO
J.W. DONALD	N.T.S.	3 SEPT 76	
DESIGNED BY			SHEET NO

ENGINEER'S APPROVAL

DESIGN	ELEC	INSTR	PIPING	STRUCT	NO	BY	DATE	REVISIONS	DATE	APP

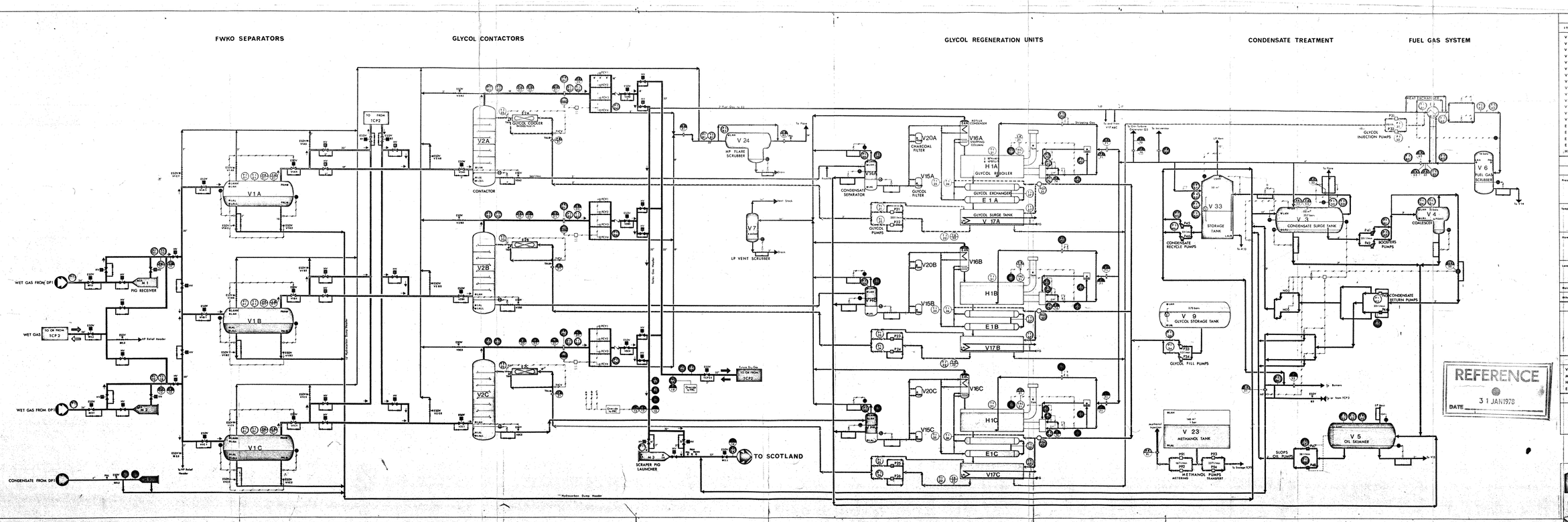

MAIN EQUIPMENT DATA

ITEM	Working Pressure Kg/cm²	SIZE	FUNCTION
V 1	172	96" x 30'	Free Water Knock Out
V 2	172	130" x 38'	Glycol Contactor
V 3	35.7	12'-0	Condensate Surge Tank
V 4	23		Condensate Coalescer
V 5	3.78	96" x 24'	Oil Skimmer
V 6	16.1	36"x 10'	Fuel Gas Scrubber
V 7	4.46	72"x 8'	Low Pressure Vent Scrubber
V 9		180 m³	Glycol Storage Tank
V 14	11.4	30"x 12'	Condensate Separator
V 16			Glycol Stripping Column
V 17		22.3 m³	Glycol Surge Tank
V 23	1.08	140 m³	Methanol Tank
V 24	38.95		High Pressure Flare Scrubber
V 33	1.72	50 m³	Condensate Storage Tank
E 1		16"x 10'	Glycol Glycol Exchanger
E 2		242 x 10³ kcal/hr (239 x 10³ BTU/hr)	Glycol Air Cooler
E 3	Tube 172 Shell 70	2.5 x 10⁶ kcal/hr (9.9 x 10⁶ BTU/hr)	Fuel Gas Heat Exchanger
E 4			Glycol Reflux Condenser
H 1			Glycol Reboiler

SYMBOLS

		INSTRUMENTS		ALARMS	
Pressure	PI	Indicator		PAH PAHH	Alarm high
	PC	Controller		PAL PALL	Alarm low
	PR	Recorder		PDAH	Differential alarm high
	PRC	Recorder and Controller			
Temperature	TI	Indicator		HTS	High switch
	TR	Recorder		TAH	Alarm high
	TIC	Indicator and controller			
	TRC	Recorder and controller			
Flow	FI	Indicator			
	FR	Recorder			
	FRC	Recorder and controller			
	FQI	Cumulative indicator			
Level	LI	Indicator		LAH LAHH	Alarm high
	LC	Controller		LAL LALL	Alarm low
				LSHH	High switch
Moisture	MR	Recorder			
Others				GAQ	Multivariable alarm

CONTROL SYMBOLS

- Local Mounted Instrument for single variable
- Instrument Mounted on CP Main Board
- Instrument Mounted Local and CP Main Board
- Instrument pneumatic Signal
- Electrical Signal

MISCELLANEOUS ABBREVIATIONS

V	Vessel	P	Pump
M	Pig Launcher	HV	Hand Valve
H	Heater	ESDV	Emergency Shut Down Valve
E	Exchanger	FCV	Flow Control Valve

COLOR SYMBOLS

WGS	Wet Gas	TEG	Tri Ethylene Glycol
DGS	Dry Gas	MEOH	Methanol
CON	Condensate Hydrocarbon	WAT	Water

TREATMENT PLATFORM
FRIGG FIELD

DEPARTMENT: PRODUCTION TRANSPORT
SERVICE STUDIES

Design: J.F. | Date: 30 APR 1974
Verification: J.P.T. | Revision: 00 | Date: January 1978

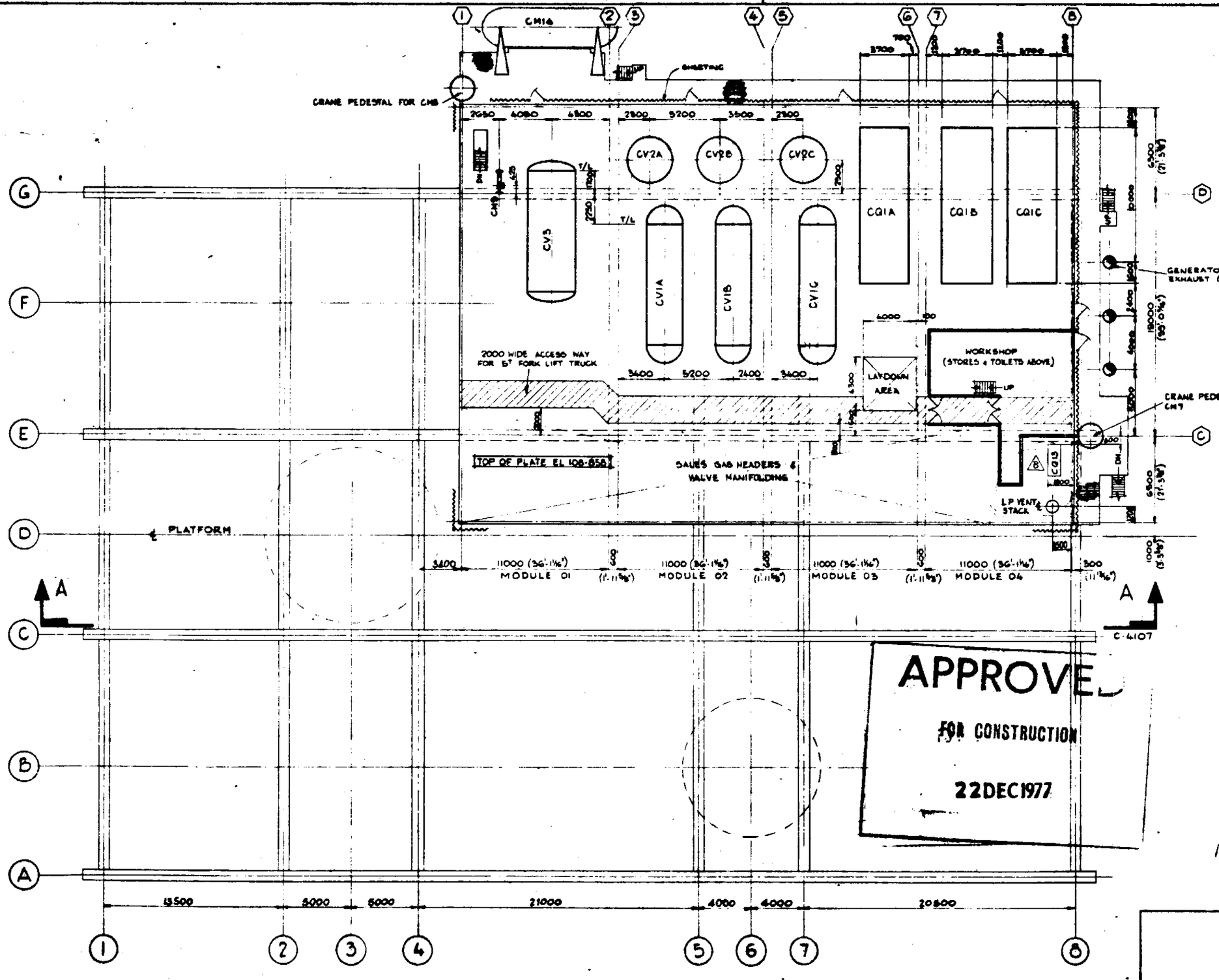

PLATFORM NORTH

NOTES:-

1. PLATFORM REFERENCE EL. 100.000 IS THE THEORETICAL TOP OF STEEL ELEVATION ON THE LOWER CHORD OF THE MAIN TRUSSES. 100.000 = + 27.240 METRES ABOVE (L.A.T.)

DENOTES FORKLIFT TRUCK ACCESS WAY

EQUIPMENT Nº	DESCRIPTION	ELEVATION
CV1A/B/C	FWKO SEPARATOR	℄ EL 111·658
CV2A/B/C	GLYCOL CONTACTOR	BOTTOM TAN LINE EL 112·768
CV3	CONDENSATE SURGE TANK	℄ EL 111·608
CQ1 A/B/C	GLYCOL REGENERATION UNIT (CV14, CV15, CV20, CV17, CE1, CP10 & CV19)	UNDERSIDE BASE EL 108·858
CM9	4" CONDENSATE PIG RECEIVER	℄ EL. 109·858
CM14	COVERED LIFEBOAT	—
CQ11	VENT/PRESS. SYSTEM FOR WORKSHOP	—
CQ13	SEWAGE TREATMENT PLANT	

REFERENCE DRGS:-

PLOT PLAN CELLAR DECK — C4108
" " UPPER DECK — C4106
" " SECTION A-A — C4107

ELF-NORGE
FRIGG FIELD

TREATMENT/COMPRESSION PLATFORM No.2

NORTH SEA JOB 1-40-E2

McDERMOTT — HUDSON
LONDON — ENGLAND

DRAWN BY	SCALE	DATE	DWG NO
V. ASHFORD	1:150	14·5·78	ELN 2169
DESIGNED BY V. ASHFORD			SHEET NO C-4108

PLOT PLAN - MAIN DECK

APPROVED Tony Dawson
DATE 19/9/75
ENGINEERS APPROVAL

CUSTOMER APPROVAL
BY
DATE 19.9.75

FAB STDS REQ'D THIS SHT

DESIGN	ELEC	INSTR	PIPING	STRUCT	NO	BY	DATE	REVISIONS	DATE	APP
					8	CJ	17.8.76	LOCATION LP VENT STACK & CQ13 REMOVED SHADING CV2A B & C	10/9	
					7	DW	17.8.76	LOCATION HOLDS REMOVED	24/9/76	
					6	VA		TRUCK ACCESS WAY INTO WORKSHOP ADDED		
					5	VA		EQUIPMENT NO. REVISED. CQ13 ADDED		
					4	VA		APPROVED FOR CONSTRUCTION		
					3	VA		REDRAWN - ISSUED FOR APPROVAL		

SHT NO C4106

DWG NO ELN 2169

PLATFORM NORTH

CRANE CM8

CV2A CV2B CV2C

CM13 FUTURE

CM13 CM3

CQ1A CQ1B CQ1C

CONTACTOR VALVES & METERING MANIFOLDS

FIREWALL

LAYDOWN AREA 4500 x 8400

2000 WIDE ACCESS WAY FOR 8T FORK LIFT TRUCK.

LAYDOWN AREA

HATCHWAY 5745 x 4225 CLEAR OPENING

CE2A CE2B CE2C

GENERATOR EXHAUST DUCTS

CRANE CM7

CQ5A & B

CSP-24 LP VENT STACK

TOP OF PLATE EL 116.556

BOOM REST FOR CM7

CQ7

BOOM REST FOR CM8

11000 (36'-1⅛") MODULE 01

11000 (36'-1⅛") MODULE 02

11000 (36'-1⅛") MODULE 03

11000 (36'-1⅛") MODULE 04

C4107

C4107

NOTES

1. PLATFORM REFERENCE ELEVATION 100.000 IS THE THEORETICAL TOP OF STEEL ELEVATION OF THE LOWER CHORD OF THE MAIN TRUSSES. 100.000 = +27.240 METRES ABOVE (L.A.T.)
2. DOTTED LINE INDICATES EQUIP. LOCATION DURING LIFTING OF MODULE.

DENOTES EQUIPMENT TO BE INSTALLED IN THE FINAL OFF SHORE LOCATION

DENOTES FORKLIFT TRUCK ACCESS WAY

EQUIPMENT Nº.	DESCRIPTION	ELEVATION
CV2A/B/C	GLYCOL CONTACTOR	SEE MAIN DECK
CE2A/B/C	GLYCOL AIR COOLER	UNDERSIDE BEAM EL. 116.556
CQ7	CENTRAL HYDRAULIC UNIT (CV42 & CP22)	UNDERSIDE BEAM E. 116.556
CQ1A/B/C	GLYCOL REGENERATION UNITS	UNDERSIDE BEAM EL. 116.556
	(CV16, CE4 & CH1)	
CQ8A&B	REMOTE CONTROL STATION FOR PIGS	UNDERSIDE BEAM EL. 116.556
	(CQ8B FUTURE)	
CM13	16" PIG LAUNCHER (TO NORWAY) (FUTURE)	—
CM3	32" PIG LAUNCHER (TO SCOTLAND)	℄ EL. 117.856
CM7	CRANE	TOP OF PEDESTAL ADAPT. EL. 125.606
CM8	CRANE	— " —
CQ5A&B	AIR COMP PACKAGE (CV35, CV36, CV37, CV90, CV41, CV43 CC1, CP18, CP19, CE5 & CE6)	UNDERSIDE BEAM EL. 116.556

REFERENCE DRGS:-

PLOT PLAN - MAIN DECK — C4105
PLOT PLAN - CELLAR DECK — C4108
PLOT PLAN - SECTION A-A — C4107

APPROVED

FOR CONSTRUCTION

22DEC1977

CUSTOMER APPROVAL

BY: [signature]
DATE 19.9.75

ENGINEERS APPROVAL

APPROVED [signature]
BY ON BEHALF OF HUDSON
DATE 18/9/75

REVISIONS	DATE	APP
CV42 & CP22 REVISED. CAT SHEET ACCESSWAY MODIFIED & REVISED	19.9.75	
CP19 CV43 & CP18 N/S	5.9.75	
APPROVED FOR CONSTRUCTION	19.8.75	
REDRAWN - RE-ISSUED FOR APPROVAL	3.7.75	

	BY	DATE
		7.6.75
		3.7.75
		3.7.75
		3.7.75
		3.7.75
		3.7.75

ELF-NORGE
FRIGG FIELD

TREATMENT/COMPRESSION PLATFORM No.2

NORTH SEA JOB 1-40-E2 WBS 104-01

McDERMOTT — HUDSON
LONDON — ENGLAND

DRAWN BY	SCALE	DATE	DWG NO
V ASHFORD	1 : 100	16-5-75	ELN 2169
DESIGNED BY V ASHFORD			SHEET NO C-4106

PLOT PLAN - UPPER DECK

A

FAB STDS REQ'D THIS SHT

	DESIGN	ELEC	INSTR	PIPING	STRUCT	NO	BY	DATE	REVISIONS
						10	DN	3-9-75	CM8 & 13 & 2 OFF BOLLARDS & CORA & LOCATED
						9	CJ	19-8-75	RELOCATION OF DAVIT BASE, BOOT, DRG SHT 4 CQ8A&B ADDED AS NOTED
						8	DN	27-5-75	LOCATIONS HOLDS REMOVED
						7	VA	5/12/74	CP VENT STACK RELOCATED. EXISTING HOLES REMOVED AND NOTE MADE.
						6	VA	19.8.75	CV42 & CP22 REVISED. CAT SHEET ACCESSWAY MODIFIED & REVISED
						5	JA	5.9.75	CP19 CV43 & CP18 N/S
						4	VA	19.8.75	APPROVED FOR CONSTRUCTION
						3	VA	3.7.75	REDRAWN - RE-ISSUED FOR APPROVAL

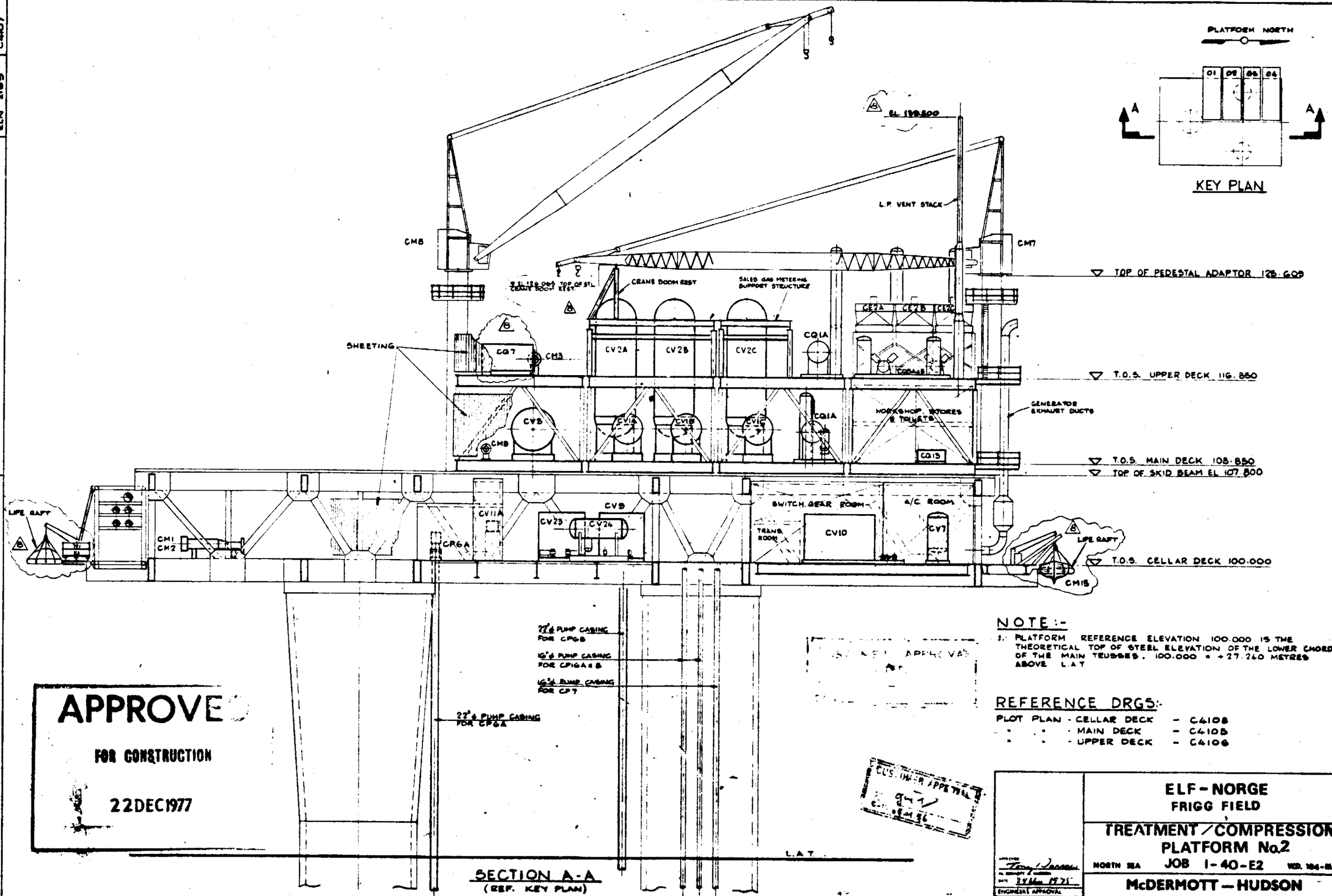

SECTION A-A
(REF. KEY PLAN)

NOTE:-

1. PLATFORM REFERENCE ELEVATION 100.000 IS THE THEORETICAL TOP OF STEEL ELEVATION OF THE LOWER CHORD OF THE MAIN TRUSSES. 100.000 = +27.240 METRES ABOVE L.A.T.

REFERENCE DRGS:-

PLOT PLAN - CELLAR DECK - C4108
" " - MAIN DECK - C4105
" " - UPPER DECK - C4106

APPROVED
FOR CONSTRUCTION
22DEC1977

CUSTOMER APPROVAL

ELF-NORGE
FRIGG FIELD

TREATMENT / COMPRESSION PLATFORM No.2

NORTH SEA JOB 1-40-E2 WD. 104-M.

McDERMOTT — HUDSON
LONDON — ENGLAND

DRAWN BY	SCALE	DATE	DWG NO
V. Ashford	1:150	18.7.75	ELN 2169
DESIGNED BY			SHEET NO
V. Ashford			C4107

PLOT PLAN — SECTION A-A

DWG NO ELN 2169 SHEET NO C4107

FAB STDS. REQ'D THIS SHT

DESIGN	ELEC	INSTR	PIPING	STRUCT	NO	BY	DATE	REVISIONS	DATE	APP
					A			SALES GAS METERING SUPPORT STRUCTURE ADDED. ELEV CM7 BOOM REST REVISED.		
					7	DW		CV10 RELOCATED		

DESIGN	ELEC	INSTR	PIPING	STRUCT	NO	BY	DATE	REVISIONS	DATE	APP
					6	VA		APPROVED FOR CONSTRUCTION		
					5	VA		CV9 CP16A & B RELOCATED		
					4	VA				
					3	VA		REDRAWN	1975	

SHEET NO C4108

DWG NO ELN 2169

PLATFORM NORTH

PIPE BRIDGE TO TP1

2500 WIDE FORK LIFT TRUCK ACCESS (TOP OF PLATE EL 100.000)

LIFE RAFT

SHEETING

PIPE SUPPORT FRAME Nº 1

PANCAKE 05

PANCAKE 06

PANCAKE 07

PANCAKE 08

PANCAKE 09

PANCAKE 10

PANCAKE 11

PANCAKE 12

PANCAKE 13

INST. INTERFACE ROOM

ELECTRICAL & INSTRUMENT LAYDOWN AREAS

GENERATOR EXHAUSTS

MECHANICAL LAYDOWN AREA

GENERATION PACKAGE CQ3

CM1

CM2

PIPE SUPPORT FRAME Nº 2

VALVE MANIFOLD

CV5

CV4A & B

CV6

CV7

CV8

CV11A & B

CV11C

CV11B

AIR RECVR CV34B

CV3B

CV23

CV9

CV24

CV10

CV-71

CV-7

CV11A

CV34A AIR RECVR

CM5

CM4

CM15

CM17A

CM17B

(FUTURE) CM5

(FUTURE) CM4

FUTURE 20" FROM HEIMDALL

FUTURE 16" TO NORWAY

4 Nº FUTURE SEAWATER PUMPS

COLUMN Nº 5

COLUMN Nº 1

COLUMN Nº 3

22" PIG CASING FOR FUTURE FIRE PUMP

FUTURE 18" FROM EAST FRIGG

16" PIG CASING FOR FUTURE PUMPS

TEMPORARY SHEETING

2000 WIDE (UNLESS OTHERWISE NOTED) ACCESS WAY FOR 5T FORK LIFT TRUCK. (TOP OF PLATE EL 100.012)

4 Nº FUTURE SEAWATER PUMPS

26" WET GAS FROM DP2

8" MUD TO DP2

12" J" TUBE FOR ELEC. CABLES

22" PIG CASING FUTURE PUMP

32" SALES GAS TO SCOTLAND

4" CONDENSATE FROM DP2

26" WET GAS FROM DP2

EQUIPMENT Nº	DESCRIPTION	ELEVATION
CV4A & B	COALESCER	℄ EL 101·350
CV5	OIL SKIMMER	℄ EL 102·106
CV6	FUEL GAS SCRUBBER	BTM TANGENT EL 100·1770
CV7	L.P. VENT SCRUBBER	BTM TANGENT EL 101·008
CV9	GLYCOL STORAGE TANK	U/SIDE SHELL EL 100·008
CV10	DIESEL STORAGE TANK	U/SIDE SHELL EL 100·008
CV11A & B	DIESEL DAY TANK (FIRE PUMP HOUSE)	U/SIDE SHELL EL 108·988
CV13	SUMP CAISSON	℄ LEVEL OF VALVE EL 99·988 ℄ OUTLET EL 100·440
CV21	DIESEL FILTER	U/SIDE SHELL EL 100·008
CV23	METHANOL STORAGE TANK	℄ EL 102·780
CV24	H.P. RELIEF SCRUBBER	℄ INLET/OUTLET EL 101·500
CV31	GLYCOL CHARCOAL FILTER	U/SIDE SHELL EL 102·008
CV33	CONDENSATE RECYCLE TANK	COLUMN 5
CV38	CONDENSATE STORAGE TANK	℄ SUCT & DISCH EL 100·893 ℄ SUCT/DISCH EL 100·440
CP1A & B	CONDENSATE BOOSTER PUMPS	℄ SUCTION EL 100·348
CP2A, B & C	COND. RETURN PUMPS (CV29)	P OF P DISCH EL 100·1648 ℄ DISCHARGE EL 100·440
CP3	SUMP PUMP	℄ SUCT & DISCH EL 100·408
CP6A & B	FIREWATER PUMP (CV11 & AIR RECV)	℄ SUCT EL 100·813
CP7	WASHDOWN PUMP	P OF P DISCH EL 100·917
CP8A & B	DIESEL PUMP	℄ SUCT & DISCH EL 100·512
CP9A & B	SLOPS OIL PUMPS (CV30)	P OF P DISCH EL 100·707
CP15A & B	CONDENSATE RECYCLE PUMPS	℄ DISCHARGE EL 100·648
CP12A & B	METHANOL INJECTION PUMPS (CV32)	℄ SUCT & DISCH EL 100·512
CP13A & B	GLYCOL FILL PUMPS	P OF P DISCH EL 100·707
CP14A & B	GLYCOL INJECTION PUMPS	℄ DISCHARGE EL 100·648
CP16A & B	WATER CURTAIN PUMP	℄ SUCT & DISCH EL 100·512
CP17A & B	METHANOL TRANSFER PUMPS	COLUMN Nº 5
CP20	CONDENSATE STORAGE PUMP	COLUMN Nº 5
CP21	OILY WATER PUMP	—
CQ3	TURBINE GENERATOR PACKAGE (CQ4 & CQ5)	
CV44	AIR RECEIVER (GEN. PACKAGE)	℄ EL 101·848
CV34A & B	AIR RECEIVER (FIRE PUMP HOUSE)	
CQ12 A & B	FIRE PUMP HOUSE VENT/PRESS. PACKAGE	—
CM1	26" PIG RECEIVER (GAS FROM DP2)	℄ EL 101·498
CM2	26" PIG RECEIVER (GAS FROM DP2)	℄ EL 101·613
CM4	20" PIG RECEIVER (FROM HEIMDALL FUTURE)	
CM5	18" PIG RECEIVER (FROM EAST FRIGG FUTURE)	
CM15	OPEN LAUNCH	
CM17A & B	CONDENSATE BURNER BOOMS	—
CE5	FUEL GAS EXCHANGER	℄ EL 101·075
CV18A, B & C	TURBINE GAS DEMISTERS	TOP OF CVS EL 104·088

REFERENCE DRGS:-

PLOT PLAN - MAIN DECK — C4105
PLOT PLAN - UPPER DECK — C4106
PLOT PLAN - SECTION A-A — C4107

NOTES :-

1. PLATFORM REFERENCE EL 100·000 IS THE THEORETICAL TOP OF STEEL ELEVATION OF THE LOWER CHORD OF THE MAIN TRUSSES, 100·000 = 27·240 METRES ABOVE (L.A.T)
2. ▨ DENOTES FORKLIFT TRUCK ACCESS WAY
3. DOTTED LINE INDICATES EQUIPMENT LOCATION DURING LIFTING OF PANCAKE

APPROVED FOR CONSTRUCTION 22DEC1977

CUSTOMER APPROVAL BY: DATE: 18.9.75

ENGINEER'S APPROVAL BY: DATE: 18/9/75

ELF-NORGE.
FRIGG FIELD

TREATMENT/COMPRESSION PLATFORM No.2

NORTH SEA JOB 1-40-E2

McDERMOTT — HUDSON
LONDON — ENGLAND

DRAWN BY	SCALE	DATE	DWG NO
V. ASHFORD	1 : 100	22.5.75	ELN 2169
DESIGNED BY V. ASHFORD			SHEET NO C 4108

PLOT PLAN - CELLAR DECK

A

PAD STDS REQ'D THIS SHT

DESIGN	ELEC	INSTR	PIPING	STRUCT	NO	BY	DATE	REVISIONS	DATE	APP
					7					
					6					
					5					
					4	VA				
					3	VA				
					2	VA				
					1	VA				
					0	VA				

DWG NO ELN 2169 | SHEET NO C4109

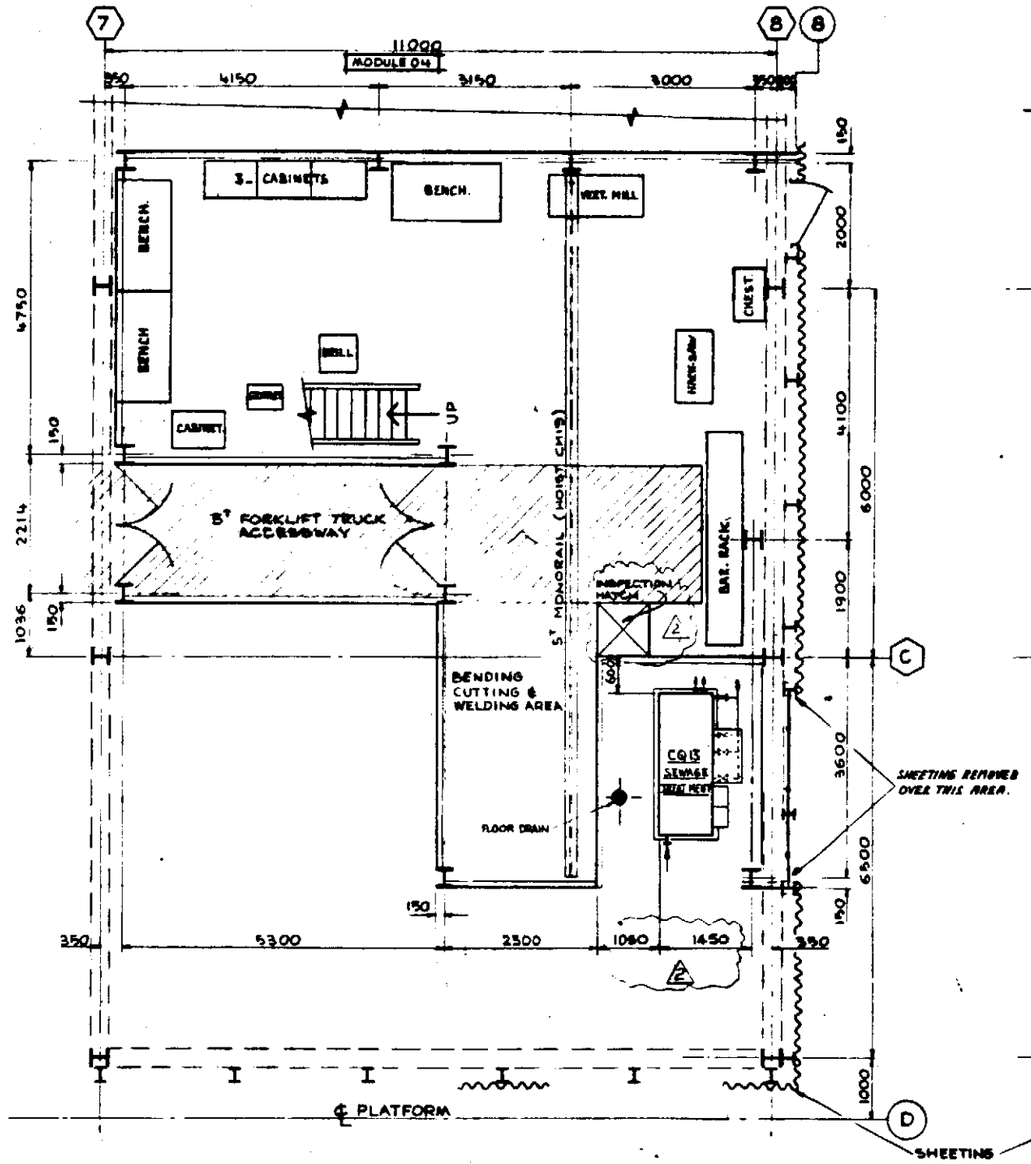

WORKSHOP LAYOUT — MAIN DECK — T.O.R. EL. 108·858

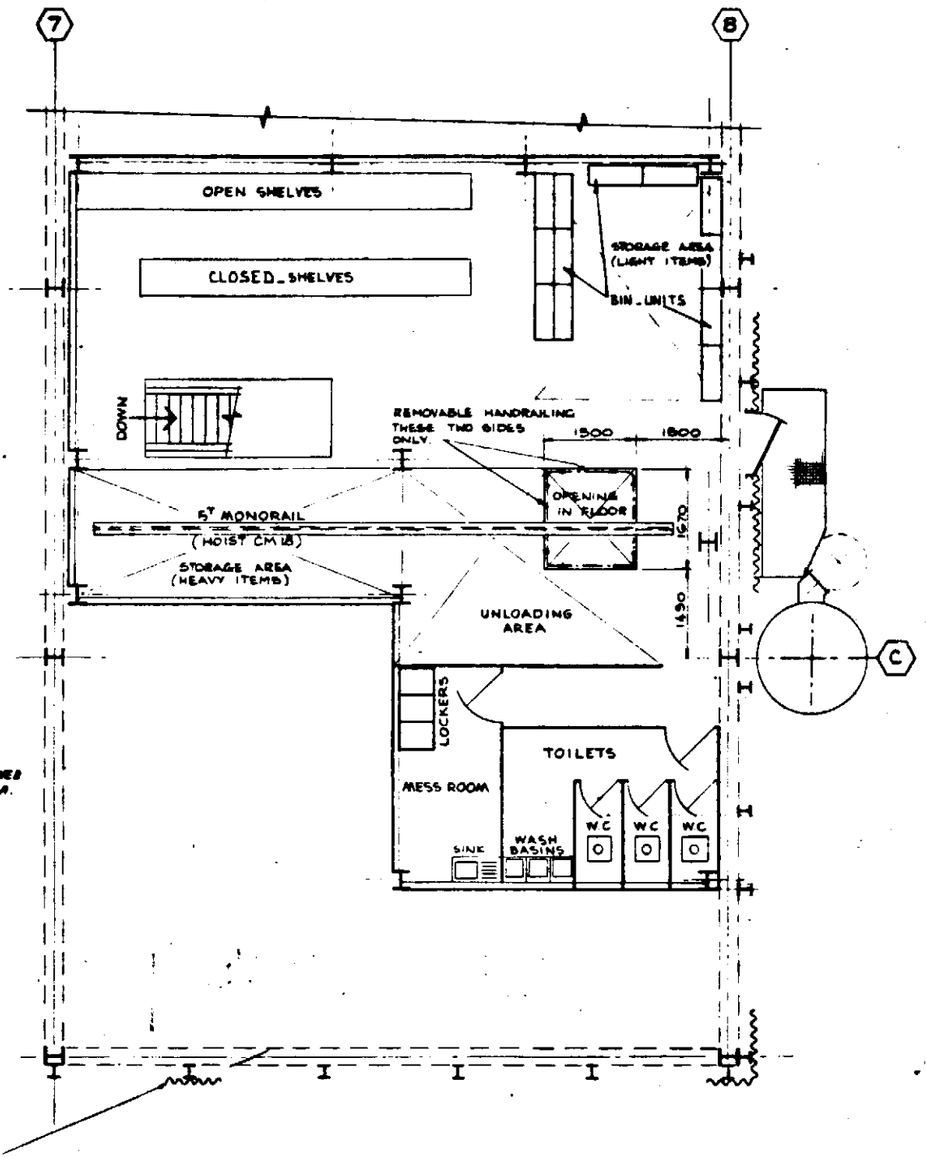

STORES LAYOUT — MEZZANINE LEVEL — T.O.R. EL. 112·358
(OVERALL DIMENSIONS AS WORKSHOP)

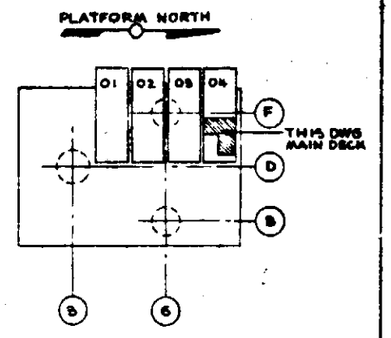

KEY PLAN

REFERENCE DRAWINGS

PLOT PLAN - MAIN DECK — C4105

NOTES

1. ALL WALLS IN TOILET AREA TO BE COVERED WITH STAINLESS STEEL SHEETING.
2. W.C.'s TO BE 'ARAB TYPE'
3. MESS ROOM TO BE PAINTED

APPROVED
FOR CONSTRUCTION
22 DEC 1977

HOLDS

2 POSITION VENTILATION EQUIP.

FAB. STDS REQ'D THIS SHT

DESIGN	ELEC	INSTR	PIPING	STRUCT	NO	BY	DATE	REVISIONS	DATE	APP

DESIGN	ELEC	INSTR	PIPING	STRUCT	NO	BY	DATE	REVISIONS	DATE	APP
		RS			2	DW				
		RS			1			CQ13 SEWAGE TREATMENT ADDED		
		MH			0	TBC		ISSUED FOR CONSTRUCTION		
		MH			A	PJP		ISSUED FOR CLIENT APPROVAL		

CUSTOMER APPROVAL
BY:
DATE: 5-11-75

APPROVED
DATE 22 Nov. 1975
ENGINEERS APPROVAL

ELF-NORGE
FRIGG FIELD

TREATMENT / COMPRESSION PLATFORM No.2
NORTH SEA JOB 1-40-E2

McDERMOTT — HUDSON
LONDON — ENGLAND

DRAWN BY	SCALE	DATE	DWG NO
PJP	1:50	10-9-75	ELN 2169
DESIGNED BY V.A			SHEET NO C4109

PLOT PLAN — WORKSHOP & STORES MODULE 04

General Description of the Platforms

2.2 General Description of the TCP2 Platform

The concrete structure of the TCP2 platform was designed as a Condeep type structure and consists of a caisson, formed by 19 cylindrical cells constructed on a hexagonal raft from which rise the three tapering columns. It was built by the Norwegian Contractors consortium at Andalsnes, Norway, and during construction 53,000 cubic metres of reinforced and prestressed concrete was used. It was completed in early 1977.

The steel deck ('support frame') was fabricated at Stord, Norway by Aker to a design by Kvearner and weighs 4900 tonnes. This was installed on the concrete during Spring 1977 at Andalsnes. Due to the flotation characteristics of the concrete structure it was possible to install the modules at an in-shore location (at Andalsnes) prior to tow-out to Frigg. The modules comprise nine flat deck units (or 'pancakes') located within the support frame and four modules which rest on top of it at the north west corner. They were fabricated at Orkanger by the Franco-Norwegian partnership Spie-Vigor and weigh approximately 8000 tonnes, bringing the total weight of the TCP2 platform to 306,000 tonnes.

With the exception of the mud unit which is installed only on TP1, the equipment provided for the treatment of gas and condensates and for the service facilities are similar to those of TP1, i.e. 3 drying lines for the gas, a 32" pipeline for the export of gas and condensates, production of electricity for TCP2, DP2 and if necessary for TP1 and QP.

Recompression of the gas will be necessary when pressure at the well head becomes inadequate after a certain period of production. Therefore space has been provided for the future installation of a compression package to recompress the total gas production of the field.

This installation may require a total power consumption of 200,000 h.p.

A bridge links TCP2 with TP1 which is itself connected by bridge to QP.

3

GENERAL DATA

Climatic and Sea Data

3.1 Climatic and Sea Data

For details of the climatic and sea data please refer to the report by A.H. Glenn and Associates reproduced in section 3.1 of Volume 1 of QP Job Book.

4

PRINCIPLES OF DESIGN

Principles Of Electrical, Instrument And Mechanical, Design.

TCP2 JOB BOOK

VOLUME 1 SECTION 4

PRINCIPLES OF DESIGN

4.1.1 Principles of Electrical Design

During normal operating conditions the primary power source is provided at 5.5 KV by three 3.5 MVA generators on TP1 and by three 1.75 MVA generators on TCP2. The number of generators being run at any time will be a function of power requirements and maintenance, allowance being made for one machine out of each set of three being down at any one time.

The 5.5 KV electrical supply is a ring system linking the high voltage switchboards on TP1, TCP2 and QP, and hence there are two routes for power to be supplied to each platform. The reason for this is to reduce the probability of loss of 5.5 KV power at any platform. For example, if power generation is taking place on TP1 only, and a fault were to develop in the TP1/QP link, power could still be supplied to QP via TCP2.

The treatment complex also provides primary power for CDP1 and DP2 by means of submarine cables from QP and TCP2 respectively.

In the event of complete loss of 5.5 KV generation, an emergency generation package located on QP will automatically start up. These generators supply power at 380v directly to the 380v motor control centres on TP1, TCP2 and QP. CDP1 and DP2 have their own emergency supplies.

On the following pages are summaries of the power requirements under normal operating conditions for the whole field and the treatment complex under emergency conditions.

McDERMOTT - HUDSON
LONDON
ENGLAND
LOAD DATA COLLECTION SHEET

PROJECT No. 2169/2111/8
REVISION No.
SHEET 2 OF 16 (10-9-76)

	TP1	QP	DP1	PHASE 1 TOTAL	TCP2	DP2	FIELD TOT		
Continuous Load (A) in KW	1390	1014	1107	3511	1303	434	5248		
Standby Load (B) in KW	932	125	500*	1557	767	300 *	2624		
Intermittent Load (C) in KW	550	475	336*	1361	642	200 *	2203		
Minimum Run in KVA (D) (A/P.F.)	1544	1127	1277	3947	1448	510	6991		
Maximum Run in KVA (E) (A+C)/(P.F.)	2155	1654	1677	5485	2161	745	8392		
Maximum Run in KVA (F) Rationalised (A+KC)/(P.F.)	1944	1323	1490	4757	2018	596			
Connected KVA (G) (A+B+C)/(P.F.)	3191	1793	2281	5265	3013	1037	11315		
Available Supply (H) in KVA	←	7000	→	7000	←	3500	→ 10500		
Plant Utilisation Min. Run (D/H)	0.22	0.16	0.18	0.56	0.41	0.14	0.55		
Plant Utilisation Max. Run (E/H)	0.3	0.24	0.24	0.78	0.61	0.21	0.82		
Plant Utilisation Max. Run (F/H)	0.25	0.19	0.19	0.63	0.57	0.17	0.74		

LEGEND
P.F. = 0.9
K = 0·8 " " OF UTILISATION.
* = ESTIMATED

	APPROVED	DATE
ELEC.	[illegible]	2/12/75
MECH.	[illegible]	27/12/75
CLIENT	[illegible]	27/12/75

McDERMOTT - HUDSON
LONDON ENGLAND
LOAD DATA COLLECTION SHEET

PROJECT No. 2110/2111/2169
REVISION No. 8
SHEET 1 OF 16 (10.9.76)

	TP1 EMERG 5.5	TP1 EMERG (380)	QP EMERG	TOT PHASE 1	TCP2 EMERG 5.5	COMPLEX TOTAL			
Continuous Load in KW (A)	190	100	811	1101	142.5	1243.5			
Standby Load in KW (B)	102	-	60	162	111	273			
Intermittent Load in KW (C)	100	22	224	346	79	425			
Minimum Run in KVA (A/P.F.) (D)	237.5	125	901	1263	178	1441			
Maximum Run in KVA (A+C)/(P.F.) (E)	365	152	1150	1667	277	1944			
Maximum Run in KVA Rationalised (A+KC)/(P.F.) (F)	273	130	920	1323	257	1580			
Connected KVA (A+B+C)/(P.F.) (G)	490	177	1216	1883	416	2299			
Available Supply in KVA (H)				1250					
Plant Utilisation Min. Run (D/H)	0.18	0.10	0.72	1.00	0.14	1.14			
Plant Utilisation Max. Run (E/H)	0.3	0.12	0.92	1.34	0.22	1.56			
Plant Utilisation Max. Run (F/H)	0.17	0.10	0.73	1.05	0.2	1.26			

LEGEND
P.F. = 0.9
K = 0.8 COEFF OF UTILISATION

PHASE 1 = TP1 + QP.

APPROVED		DATE
SLECT.	[signature]	2/12/75
PROJ.	[signature]	2/12/75
CLIENT	[signature]	2.12.75

4.1.1.1 Alternators, Generator Package

The Treatment and Compression Platform No. 2 is equipped with three 1.75 MVA gas turbine driven alternators located in pancake 08. Each alternator is rated at 1750 KVA at 0.8 power factor, 5500 volt, 50 Hz, 3 phase, at 1500 rpm. The prime mover for each generator is a Kongsberg gas turbine type Viking KG 2-3C developing 2000 H.P. at an output shaft speed of 1500 rpm. The starting of the generators is effected by gas starter motors as is the stand-by lubrication system.

4.1.1.1.1 Generator Earthing System

Earthing of the system is by permanently connected 17 OHMS 190 amp resistors between the neutral of each generator and earth. The valve of 17 OHMS was chosen as a compromise between, limiting the possible flow of third harmonic currents circulating between the generators on the distribution system and the need to have adequate earth fault current to operate the protection relays, in particular the relationship of setting of the circulating current protection on the ring main feeders to the earth fault current available from one generator necessitating the use of special ratio current transformers on the ring main circuits. The earth fault current contribution of each generator is limited to less than 190 amps.

4.1.1.1.2 Generator Controls

Generator Control Console - The following functions are available on the generator main control console.

	Push Button	Indicator	Switch
Local - remote			X
Emergency stop	X		
Raise speed	X		
Lower speed	X		
Raise volts	X		
Lower volts	X		
Line volts		X	
Ammeter		X	
Automatic temp. scanner		X	
Power factor meter		X	
Temperature indicator		X	
Frequency meter		X	
Start	X		
Stop	X		
Fault trip alarm		X	
Fault pre-warning alarm		X	

The following alarm and shutdowns are indicated on the annunciator panel provided with each turbine control panel. Alarm cancel push buttons are provided that cancel the audible alarm, lights are only extinguished when the fault is cleared.

	Lamp	Alarm	Shutdown
High exhaust temperature		X	X
High lubricating oil temp.		X	X
Low lubricating oil pressure		X	X
Flame out			X
One speed pickup failed		X	
Both speed pickup failed			X
Low gas fuel pressure		X	

	Lamp	Alarm	Shutdown
Scrubber high liquid level			X
High turbine vibration		X	X
Low lube oil level			X
Blow in door open		X	
Emergency stop			X
Generator high bearing temp.		X	X
Pickup failure exh. temp.			X
Pickup failure vibration			X
Generator winding high temp.		X	X
Battery failure		X	
Ventilation failure		X	
Overspeed I			X
Overspeed II			X
Purge fan on air supply		X	
11000 rpm		X	
Auto		X	
Available for start		X	
Ignition failure		X	
1907 reg. in min. fos.		X	
Sequence timer on		X	
Ignition on		X	
Aux. lube oil pump running		X	
Lube oil pump on standby air		X	

4.1.1.2 5.5 KV Switchgear

The 5.5 kV switchboard is a Whipp and Bourne sheet steel, fully interlocked, air insulated marine pattern switchboard. It is divided into three sections designated 'A', 'B' and 'C'. From sections 'A' and 'C' the main 380V distribution is fed via two 1 MVA transformers. Bus section 'A' also supplies 5.5 kV to TP1 and bus section 'C' provides high voltage supplies to Drilling Platform No. 2 and Quarters Platform.

4.1.1.3 380 Volt System

Transformers T4 and T5 are 1000 kVA 5500/380 volt Askerel filled transformers located in the transformer room on pancake 09 on the cellar deck.

Both have a Delta/Star configuration with a brought out neutral on the low voltage side, and are connected between the 5.5 kV switchboard and the 380 volt motor control centre.

The 380 volt motor control centre is a sheet steel fully interlocked marine pattern switchboard. The bus bars are split into two sections 'A' and 'B', interconnected by an air circuit breaker and are rated at 2500 amps.

The following is a list of the loads of each bus section:

Bus Section 'A'

CP1A	Condensate Booster Pump 'A'
CP1B	Condensate Booster Pump 'B'
CP2A	Condensate Return Pump 'A'
CP2B	Condensate Return Pump 'B'
CP2C	Condensate Return Pump 'C'
CP12A	Methanol Injection Pump 'A'
CP12B	Methanol Injection Pump 'B'
CP17A	Methanol Transfer Pump 'A'
CP17B	Methanol Transfer Pump 'B'
CP13A	Glycol Fill Pump 'A'
CP13B	Glycol Fill Pump 'B'
CP8A	Diesel Transfer Pump 'A'
CP8B	Diesel Transfer Pump 'B'
CP9A	Slops Oil pump 'A'
CP9B	Slops Oil pump 'B'
CP10A	Glycol pump 'A'
CP10B	Glycol pump 'B'
CP10C	Glycol pump 'C'
CP10D	Glycol pump 'D'
CP10E	Glycol pump 'E'
CP10F	Glycol pump 'F'
CP7	Washdown pump
CP20	Condensate storage pump
CP16A	Water Curtain Pump 'A'
CP16B	Water Curtain Pump 'B'
CP22A	Hydraulic Oil Pump 'A'
CP22B	Hydraulic OIl pump 'B'

CP15A	Condensate Recycle Pump 'A'
CP15B	Condensate Recycle Pump 'B'
CP21	Oily Water Pump
CC1A	Instrument and Utility Air Compressor 'A'
CC1B	Instrument and Utility Air Compressor 'B'
CQ13	Sewage Treater
B48	Syminex Charger/invertor
CE2A	Glycol Air Cooler Fan 'A'
CE2B	Glycol Air Cooler Fan 'B'
CE2C	Glycol Air Cooler Fan 'C'
	Ballast Cyclinder Outflow Pump 'A'
	Ballast Cyclinder Outflow Pump 'B'
	Ballast Cyclinder Outflow Pump 'C'
CP3	Waste Oil Sump Pump
CM15	Open Launch Hoist
CM14	Covered Lifeboat Hoist
	Fuel Module Vent Fan TA4
	Fuel Module Vent Fan TA5
	Fuel Module Vent Fan TA6
	Column 1 M.D.U. Breaker No.1
	Column 1 M.D.U. Breaker No.2

Bus Section 'B'

MTV2A	Trace Heating Gas Analyser Line 'A'
MTV2B	Trace Heating Gas Analyser Line 'B'
MTV2C	Trace Heating Gas Analyser Line 'C'
TA4	CACA Fan
TA5	CACA Fan
TA6	CACA Fan
TA4	CACA Fan
TA5	CACA Fan
TA6	CACA Fan
	Air Conditioning Supply Fan 'A'
	Air Conditioning Supply Fan 'B'
	General Area Pressurisation Fan 'A'
	General Area Pressurisation Fan 'B'

- cont -

Generator Room Pressurisation and Air Conditioning Damper Supply 'A'

Generator Room Pressurisation and Air Conditioning Damper Supply 'B'

Lube Oil Heater TA4

Lube Oil Heater TA5

Lube Oil Heater TA6

Anticondensation Heater TA4

Anticondensation Heater TA5

Anticondensation Heater TA6

Transformer Room Pressurisation Fan

Switchgear and Instrument Room Refrigeration Compressor

Glycol Trace Heating Train 'A'

Glycol Trace Heating Train 'B'

Glycol Trace Heating Train 'C'

Glycol Jacket Heater 'A'

Glycol Jacket Heater 'B'

Glycol Jacket Heater 'C'

Main Inlet Preheater

Main Inlet Preheater

Welding Outlets Nos 1A & 1B

Welding Outlets Nos 2A & 2B

Welding Outlets Nos 3A & 3B

Welding Outlets Nos 4A & 4B

Welding Outlets Nos 5A & 5B

Welding Outlets Nos 6A & 6B

Welding Outlet No 7A

Welding Outlets Nos 8A & 8B

Welding Outlets Nos 9A & 9B

Generator Area Ventilation Panel Supply

Workshop & Stores Ventilation Panel Supply

MCC & Interface Room Ventilation Panel Supply

Cabling & HV Room Ventilation Panel Supply

Battery Room Ventilation Panel Supply

Fire Pump House No. 1 Ventilation Panel Supply

Fire Pump House No. 2 Ventilation Panel Supply

24 Volt d.c. No-Break System

- cont -

DB301 Maintained Lighting & 24V Socket Outlets
DB302 Lighting Distribution Board
DB303 Small Power (Socket Outlets)
DB304 Battery Distribution Board
DB305 Lighting Distribution & 220V Socket Outlets - Generator Package
DB307 Workshop & Stores Distribution Board
DB308 Emergency Supply Level TCP2
DB311 Instruments 220V Distribution Board Interface room

4.1.1.4 Control Console

This has been designed and installed to provide central control facility for the generation and distribution of power on TCP2. The unit comprised a mimic showing an alarm light for each distribution circuit. Faults are indicated by the illumination of the relevant light and sounding of the warning hooter. Alarm/Cancel push buttons are provided that cancel the audible alarm. The light is only extinguished when the fault has cleared.

The control console comprises of the following sections:

Section 1 for control of QP
Section 2 for control of TP1
Section 3 for control of TCP2

4.1.1.5 Lighting

Lighting circuits are fed from the 220v 50 Hz system. Normal indoor lighting is rapid start fluorescent. Normal outdoor lighting is fluorescent and floodlight. Lighting systems are split into three categories:

(a) Normal lighting, supplied from a distribution board connected to the main power system.

(b) Emergency lighting, supplied from a distribution board connected to the emergency power system. The emergency system includes lifeboat lighting, boat landing lighting and crane supplies.

(c) Emergency maintained lighting, supplied from the same distribution board as (b) but each unit shall be supplied as a self-contained emergency unit complete with rechargeable batteries and automatic changeover facilities.

4.1.1.6 Emergency Power

Emergency power is available from the Quarters Platform for the operation of essential lighting, pump, compressors, and pressurisation unit.

4.1.1.7 Navigation Aids

Navigation aids are divided into 2 sections: (a) visual and (b) audible. All the equipment is manufactured by Wallace Tiernan.

Visual navigation aids on TP1 consist of 2 white lights (15 mile and 10 mile lights) and four 3 mile red lights.

The system is interconnected with TP1 and TCP2 and the interconnecting bridges have red lights positioned at their centres. Electrical power of 220 volts 50 Hz single phase is from a power control unit located on QP with back up power from a 24 HR diesel generator supply.

The lights are initiated by photo electric cells located on QP or by the manual override switch in the QP control room.

When the lights are switched on, the power control unit will emit a morse code letter 'U' to all the connected platforms thus ensuring the lights operate in unison.

On failure of the 15 mile lights, the standby 10 mile white light will automatically come on, being fed with power from the control unit on QP, and an alarm registered on the QP safety panel.

The main fog horn is fed by a 220 volt supply from a control panel located on QP which also feeds TP1 and TCP2 and ensures all foghorns operate in unison. The main foghorn has a range of 2 sea miles and is located at the S.W. end of the platform. The control panel is fed from the same 1000 ampere-hour battery as the red and white standby lights. Initiation of the foghorn is manual from the QP radio room.

The standby foghorns have a range of $\frac{1}{2}$ a sea mile and are supplied with 220v 50 Hz with 24 Hr diesel generator back up. On failure of one or more of the main foghorns on QP, TP1 and TCP2 platforms the standby $\frac{1}{2}$ mile foghorns will automatically be energised and an alarm given in the Quarters Platform Control room on the safety panel.

All the standby foghorns are fed via a pulse generator which switches them on and off in unison giving the morse code letter 'U'.

4.1.1.8 Hazardous Areas

Hazardous classification of area of Treatment & Compression Platform No. 2 is in accordance with the Institute of Petroleum Code of Safe Practice Parts 1 and 8.

The area classifications are:

Non-Hazardous area: An area in which explosive mixtures are not expected to be present in quantities such as to require special precautions for the construction and use of electrical apparatus.

Hazardous Area: An area in which explosive mixtures are, or may be expected to be, present in quantities such as to require special precautions for the construction and use of electrical apparatus.

Hazardous areas are divided into three zones classified in order of decreasing probability of the presence of an explosive mixture.

Zone 0: An explosive mixture is continuously present or present for long periods.

Zone 1: An explosive mixture is likely occur in normal operation, but is not likely to be present for long periods.

Zone 2: An explosive mixture is not likely to occur in normal operation, and if it occurs it will only exist for a short time.

Treatment Platform No. 2 has the following Zone 1 areas:

(a) Around the three turbine exhausts a volume outlined by three metres in all directions from the opening of the exhaust.

(b) Around the two flare stacks CM17A and CM17B, a volume outlined by three metres in all directions from the upper limit of the stack.

(c) Around the L.P. vent stack a volume outlined by three metres in all directions from the upper limit of the stack.

Treatment Platform 2 has the following Zone 2 areas:

(a) Main deck in total with the exception of the workshop which is a pressurised area, the pressure being 12.00mm w.g.

(b) Upper deck in total, area outlined to the north by CQ1C and the vent stack, to the east by future compressor connections and blind flanges to the south by CM3 and CQ7 and finally the west by CV2A B and C.

(c) Cellar deck, in total with the exception of the generation/distribution package consisting of battery room, generator room, air conditioning room, high and low voltage switchgear rooms which are all pressurised. On loss of pressure, manual shutdown is initiated and the area becomes a Zone 1 area. The battery room is normally a safe area due to pressurisation. On loss of normal pressurisation, which will be detected by a duct mounted flowswitch, an auxiliary system supplied from emergency distribution board DB 308 starts automatically. On complete loss of both pressurisation systems the battery room becomes a Zone 1 area.

4.1.2 Principles of Instrument Design

The instrumentation facilities are designed to monitor and control process requirements for economical gas production with in-built safety systems protecting personnel, equipment and the environment.

The treatment platforms are designed such that the process areas will be unmanned during normal operation, the control and monitoring functions being carried out from the field control room on the Quarters Platform.

4.1.2.1 Field Instrumentation

The instrumentation within the process treatment areas has been designed wherever possible to be pneumatically operated. Where this has not been practical and electrical units have been used, they are either of the intrinsically safe variety or are enclosed in housings approved for the particular hazard classification.

In addition to being automatically or remotely operated there is provision for local control for use during the start-up phase or when faults or malfunction require intervention during normal working.

All the process control and signalling is routed to an interface room on the treatment platform prior to being transmitted to QP. This interface area contains pneumatic to electrical signal convertors together with racked equipment for other facilities such as emergency shut down, fire and gas detection, indication and recording of process measurements and control air distribution, alarms and telephone and public address system. The telemetry marshalling cabinets and the back-up power supply equipment are also located in the interface rooms.

4.1.1.2 Telemetry

All data, alarm and control information is transmitted from TP1, TCP2, CDP1 and DP2 to QP, and vice versa, via the 'CETT' telemetry system. This system is effectively four parts, one for each platform. Each inter platform connection comprises a multi-channel link transmitting the information as electrical digital data on a time-shared basis. Each source of data being 'scanned' by the telemetry link, in rotation, once every two minutes.

Communication between QP and TP1 or TCP2 is via the connecting bridges.

4.1.2.3 Emergency Shutdown System

The emergency shutdown system is a dual operating system. Shutdown of all non-safety equipment can be automatically or manually triggered. The systems which remain operating after shutdown include fire and gas detection systems, communications systems, navigational aids, internal and external emergency lighting. The fire pump start also functions on initiation of emergency shutdown.

The system is designed on a number of levels with the ability for each platform to protect its own equipment but interlinked with all the other platforms to permit the safe and co-ordinated shutdown of the whole field if necessary.

The levels of emergency shutdown are as follows:

First Level - Manual shutdown of the field (QP, CDP1, DP2, TP1 and TCP2), without decompression, by push button from the QP control room.

Second Level - Manual shutdown and decompression of individual platforms by push button from QP control room or the platform affected.

Third Level - Shutdown by local push buttons on individual platforms, or from QP, without decompression.

Automatic shutdown of platforms after fire or gas detection. Electrical supplies in these areas are then automatically isolated except for emergency services.

Fourth Level - Shutdown by local or remote on QP push button of one or all of the streams of gas treatment. Automatic shutdown of one or all of the gas streams by local pressure switches.

Fifth Level - Selective process shutdown, detection of abnormal process conditons.

4.1.2.4 P.A. & Alarm System

The P.A. and alarm system is manufactured by Brodrene Steen-Hansen of Norway, model number PEGFA Mark 25, 000A1,2,4/2500 - 3 x 26 - SV, the output of which is 2500 watts - 1500 watts for QP and TP1 platforms and 1000 watts for TCP2 platform.

The Public Address is based on a common call or voice paging loudspeaker system, with a number of microphone inputs connected to the amplifier panels located on the Quarters Platform.

REFERENCE
DATE 10 FEB 1978

CMS-MSD-1
PUSH BUTTONS No 1 (IN CONTROL ROOM ON QP)
FIELD SHUTDOWN ELECTRICAL SHUTDOWN NO DE-COMPRESSION

CMS-13
TCP-2 PUSH BUTTONS (INTERFACE ROOM)
SHUTDOWN TCP-2 & DP-2 WITH DE-COMPRESSION

SHUT DOWN TP-2

No 5
PUSH BUTTON ON QP (IN CONTROL ROOM)

PUSH BUTTON CMS-12 (IN CONTROL ROOM) ON Q.P
SHUTDOWN DP-2 & TCP-2 WITH DE-COMPRESSION

1ST LEVEL
2ND LEVEL
3RD LEVEL
4TH LEVEL
5TH LEVEL
6TH LEVEL

TCP2 GAS DETECTION PROCESS 60% LEL
COINCIDENCE OPERATION

TCP-2 GAS DETECTION ABOVE CANTOL, REGEN, FIREWALL AND CE-2A & CE-2B
COINCIDENCE OPERATION

OPEN DELUGE VALVE XV-CM6-5

TCP2 FIRE DETECTION PROCESS AREA

OPEN DELUGE VALVE IN ZONE OF FIRE DET.

CMS ESD-1 — PUSH BUTTON IN INTERFACE ROOM
CMS ESD-4 — PUSH BUTTON BY BRIDGE
CMS ESD-3 — PUSH BUTTON BY LIFE BOAT
CMS ESD-2 — PUSH BUTTON BY ESCAPE CRAFT
CMS ESD-5 — PUSH BUTTON IN M.C.C. ROOM
CMS ESD-6 — PUSH BUTTON ON QP
TCP-2 PLATFORM ESD. NO DE-COMPRESSION

DISCRETE FIRE PUMPS START

FIRE PUMPS START QP, TP-1 & TCP-2 (TP1)(CM6)(TCP2)(CM1&CM2)

CMS 3 — QP CONTROL ROOM
CMS 2 — TCP-2 INTERFACE ROOM
PUSH BUTTON STOP STREAM 'A'
PSL CV1A 2A
PSL CV2A 22A
PX/PSH CV2A-5 (H)
CMS 15 — AUTHORISE STREAM 'A' SEE NOTE 9

CMS 6 — QP CONTROL ROOM
CMS 5 — TCP-2 INTERFACE ROOM
PUSH BUTTON STOP STREAM 'B'
PSL CV1B 2A
PSL CV2B 22A
PX/PSH CV2B-5 (H)
CMS 16 — AUTHORISE STREAM 'B' SEE NOTE 9

CMS 9 — QP CONTROL ROOM
CMS 8 — TCP-2 INTERFACE ROOM
PUSH BUTTON STOP STREAM 'C'
PSL CV1C 2A
PSL CV2C 22A
PX/PSH CV2C-5 (H)
CMS 17 — AUTHORISE STREAM 'C' SEE NOTE 9

CONTROL FUNCTION 'HIGH'
MC CM3-1
MC CV2A-1
LSLL CV2A-5A
LSHH CM3A-3A
MC CM13-1
MC M3-1
LSLL CM3-7A
LSHH CV1A-8A
SEE NOTE 6
AND
LSHH CV1A-8A

CONTROL FUNCTION 'HIGH'
MC CM3-1
MC CV2B-1
LSLL CV2B-5A
LSHH CM3B-3A
MC CM13-1
MC M3-1
LSLL CM3-7A
LSHH CV1B-8A
SEE NOTE 6
AND
LSHH CV1B-8A

CONTROL FUNCTION 'HIGH'
MC CV2C-1
MC CM3-1
LSLL CM3-7A
LSLL CV2C-5A
LSHH CM6-3A
MC CM13-1
MC M3-1
SEE NOTE 6
AND
LSHH CV1C-8A

TO TP1 GROUP 'V' BRIDGE LINE SHUTDOWN (B-1)(B-2)(B-3)(TCP2-1)(M-2)(B-7)
CMS 20 — AUTHORISE GROUP 'U' SEE NOTE 9
CMS M3-4D — Q.P
CMS CM8-4E — FIELD MOUNTED
STOP PIG LAUNCH
CMS 21 — AUTHORISE GROUP 'V' SEE NOTE 9
FROM TP-1 SEE NOTE 7

PXL CM5-2
PXH CM5-1
PXL CM14-2
PXH CM14-1
PXL CM13-2A
PXH CM13-2B
PXH CM13-3
PXL M4-3
AND
PX CM1-1 (L)(H)
PX M1-3 (L)(H)
PX CM2-1 (L)(H)
PX M2-3 (L)(H)
PXL CM13-2A
PXH CM13-2B
SEE NOTE 6

ESDV CM5-2
ESDV CM1-1
ESDV CM2-1
VALVE PUSH CLOSED
ESDV CM3-1
ESDV CM5-1
ESDV CM6-1
ESDV CM13-1

TELEMETERED SIGNAL SHUTDOWN DP-2 OUTLET VALVE (ONSHORE FROM DP-2)
VIA CM1 FROM DP-2 LINE 'A'
VIA CM2 FROM DP-2 LINE 'B'
STOP CM-3 PIG LAUNCH & SALES GAS TO SCOTLAND
SHUTDOWN PUMPS CP1A, CP1B, CP2A, CP2B & CP2C

GROUP 'U'

CP1A/1B Nos CE2A SHUTDOWN FUEL GAS HEADER ESDV-CM1-1 CLOSES RECIRCULATION UNIT 'A' SHUTDOWN.
Separator 'A' Gas Inlet.
Gas From Stream 'A' To Sales Gas Header.
H.P. Gas To Cantonese 'A'.
Separator 'A' L.P. Gas Outlet
Separator 'A' Intermediate Drum
Separator 'A' Intermediate Drum
Cancel Condensate Rich Glycol Outlet.
CP2A/2B Nos CE2B SHUTDOWN FUEL GAS HEADER ESDV-CM1-2 CLOSES RECIRCULATION UNIT 'B' SHUTDOWN.
Separator 'B' - Gas Inlet.
Gas From Stream 'B' To Sales Gas Header.
H.P. Gas To Cantonese 'B'.
Separator 'B' L.P. Gas Outlet
Separator 'B' Intermediate Drum
Separator 'B' Intermediate Drum
Cancel Condensate Rich Glycol Outlet.
CP2C/D Nos CE2-C SHUTDOWN FUEL GAS HEADER ESDV-CM1-3 CLOSES RECIRCULATION UNIT 'C' SHUTDOWN.
Separator 'C' Gas Inlet.
Gas From Stream 'C' To Sales Gas Header.
H.P. Gas To Cantonese 'C'.
Separator 'C' L.P. Gas Outlet
Separator 'C' Intermediate Drum
Separator 'C' Intermediate Drum
Cancel Condensate Rich Glycol Outlet.
DEV. GAS FROM EAST FRIGG.
DEV. GAS FROM HEIMDALL.
SALES GAS TO NORWAY.

GROUP 'A'
GROUP 'B'
GROUP 'C'
GROUP 'U' FUTURE

ESDV CV1A-1
ESDV CV2A-4
ESDV CV2A-1
ESDV CV1A-4
ESDV CM3-2
ESDV CM1-2
ESDV CM2-2
ESDV CM3-3
ESDV CM2-3
ESDV CV1B-1
ESDV CV2B-4
ESDV CV2B-1
ESDV CV1B-4
ESDV CM3-4
ESDV CM1-3
ESDV CM2-4
ESDV CM3-5
ESDV CM2-5
ESDV CV1C-1
ESDV CV2C-4
ESDV CV2C-1
ESDV CV1C-4
ESDV CM3-6
ESDV CM1-4
ESDV CM2-6
ESDV CM3-7
ESDV CM2-7
ESDV CM5-1
ESDV CM6-1
ESDV CM13-1

NOTES
1. FOR CONTINUATION OF SHUTDOWN LOGIC SYSTEM SEE DRG. Nos ELN 2169 - C7002 & C7003.
2. THESE DRGS TO BE READ IN CONJUNCTION WITH SHUTDOWN LOGIC FOR TP1 DRG. Nos ELN 2110-785 PAGES 1, 2 & 3.
3. THERE ARE FIVE LEVELS OF SHUTDOWN, 1, 2 & 3 ARE SAFETY LEVELS. 4 & 5 ARE PROCESS SHUTDOWN LEVELS.
4. FOR LIST OF NON ESSENTIAL SUPPLIES, SEE ELECTRICAL LOAD DATA SHEETS.
5. PUSH BUTTONS & INSTS. SHOWN WITH DOUBLE LINES ARE LOCATED ON TP1 OR QP.
6. MC-M3-1 TO BE MANUALLY SWITCHED IN WHEN GAS IS FLOWING FROM TCP-2 TO TP-1.
7. IF TCP-2 CONDENSATE IS BEING INJECTED INTO TP1 PIPELINE TO SCOTLAND, THEN A CONTROL SIGNAL MUST BE MANUALLY CONNECTED SO THAT IF VALVE "ESDV-M3-1" (GAS TO SCOTLAND) CLOSES PUMPS CP1A, CP1B, CP2A, B & C ARE STOPPED.
8. HIGH OR LOW PRESSURE AT INTERMEDIATE PLATFORM IS TELEMETERED TO TCP-2 TO CLOSE "ESDV-CM3-1"; STOP CM-3 PIG LAUNCH & STOP PUMPS, CP1A, CP1B, CP2A, CP2B & CP2C.
9. EACH STREAM/GROUP SHUTDOWN HAS AN ASSOCIATED "AUTHORISE" PUSH BUTTON ON QP WHICH MUST BE OPERATED TO ALLOW RE-OPENING OF A VALVE AFTER SHUTDOWN.

LEGEND
- EMERGENCY SHUTDOWN VALVE (VALVE OPEN)
- EMERGENCY SHUTDOWN VALVE (VALVE CLOSED)
- MANUAL INITIATION
- SELECTOR SWITCH (LOCKABLE TYPE) LOCATED ON MAIN CONTROL PANEL.
- PUSH BUTTON

REFERENCE DRGS.
SHUTDOWN LOGIC DIAGRAMS — ELN 2110 - SHT 785 PAGES 1, 2 & 3.
ELECTRICAL LOAD DATA SHEETS. — ELN 2110 HOLD

MATCHLINE FOR CONTINUATION SEE ELN 2169-C7002

FAB. STDS. REQ'D. THIS SHT

DESIGN	ELEC.	INSTR.	PIPING	PROCESS	NO.	BY	DATE
			–	–	5	RG	13-10-76
RHZ	WB	MH	–	–	4	EH	1-4-76

REVISIONS	DATE	APP.
PUSH BUTTONS (2) TO INSTALL AT CHECKOUT OF TRUSTEE TEST TO BE USE FOR CONTROL & SHUTDOWN PERFORMANCE TEST.	20/10	
SELECTOR SW. FOR STREAMS A, B, C DELETED FUEL GAS TO BE USED FOR TP1 & TCP2 SHUTDOWN	1/6/76	
DIAGRAMS RE-DRAWN FOR CLARITY. REFERENCE TO ELECTRICAL SHUTDOWN LOGIC TEXT.	–	–
PUSH BUTTONS (2) & INSTS. SHOWN WITH DOUBLE LINES ARE LOCATED ON TP1 OR QP. NOTES 1, 2, 3, 4, 5 & 6 ADDED. PREVIOUS NOTES 1 TO 6 DELETED.	–	–

DESIGN	ELEC.	INSTR.	PIPING	PROCESS	NO.	BY	DATE
	WB	MH		TO	3		22-1-76
				–	7	EH	8 DEC 76
RHZ		MH			6	RG	29-11-76

REVISIONS	DATE	APP.
CONDENSATE INJECTION SERVICE ADDED. DIRECT TRANSFER TO TRANSFER SERVICE. GAS DEHYDRATION CONTROL STREAM 'A' VALVE NO. 2 METERING LEAK VALVE, CONDENSATE INJECTION ADDED. AUTHORISE BUTTONS FOR STREAMS A, B & C AND GROUP 'U' VALVE. — UNITS 'A' & 'B' ADDED. CLOSING TIME 3 SECS. — SHUT DOWN TIMES ADDED. SEE ALSO DRAWING ELN 2169-C7003	19/1/76	
	2/3/76	

CUSTOMER APPROVAL
BY:
DATE: 05.08.76

APPROVED Tom Damon
for McDERMOTT - HUDSON
DATE: May 5 1978
ENGINEERS APPROVAL
JOE EARLEY

	BY	DATE
PROJECT	RSD	1/10/75
STRUCTURAL	—	—
PIPELINES	TO	5/8/75
MECHANICAL	MWK	1-3-76
ELECTRICAL	WB	1-4-76
INSTRUMENT	MH	21-3-76
GAS SALES	EH2	5-5-76

ELF - NORGE
FRIGG FIELD
TREATMENT / COMPRESSION PLATFORM No 2
NORTH SEA JOB 1-40-E2 W.D. 104-M.
McDERMOTT — HUDSON
LONDON — ENGLAND

DRAWN BY	SCALE	DATE	DRG. No.
C. DRAY	NONE	26 MAY 75	ELN 2169
DESIGNED BY: EH			SHEET NO. C7001

SHUTDOWN LOGIC DIAGRAM (PROCESS

NOTES

1. FOR GENERAL NOTES AND LEGEND SEE DRG. No ELN 2169-C 7001.
2. CV3 WILL ONLY PRESSURE RELIEVE ON A 2ND LEVEL BLOWDOWN SIGNAL PROVIDED THERE IS A LOW PRESSURE SIGNAL FROM PT-CV3-7.
3. LEVEL SWITCHES LSHH-CV38-4 & LSL CV38-1 HAVE 2 DUPLICATE SWITCHES (TAGGED B&D) PERMANENTLY CONNECTED IN SERIES TO ENSURE OPERATION, ON FAILURE OF ONE OF THE SWITCHES.

REFERENCE

10 FEB 1978

DATE

MATCHLINE - FOR CONTINUATION SEE DRG. ELN 2169-C 7003.

NORTH LINE - FOR CONTINUATION SEE ELN 2169-C 7001

1ST LEVEL
2ND LEVEL
3RD LEVEL
4TH LEVEL
5TH LEVEL

FROM TR-1 SHUTDOWN LEVELS 1, 2 & 3

10 SEC. TO 10 MIN. DELAY

ADJUSTABLE TO ALLOW HYDRAULIC SHUT-IN ESD VALVES TO CLOSE BEFORE DECOMPRESSION.

PT CV3-7

AND

SEE NOTE 2

PY CV2C-6 (4)

FROM TR-1 2ND LEVEL SHUTDOWN

CH8-17 CH8-27

QP SHUT DOWN CONDENSATE TO CV-38

TCP-2 IN FACE ROOM

SEE NOTE 3

LSHH CV38-4A/B
LSHH CV38-2A
LSHH CV38-4A/B
LSHH CV38-3A
LSL CV33-3A
LSL CV38-1A/B

LCV CV33-8
LCV CV33-7
LCV CV38-1
LCV CV38-2

CONDENSATE TO CV-38 FROM TP-1 OR CV-33

CONDENSATE TO CV-38 FROM CV-33

CONDENSATE FROM CV-38 TO CV-3 OR BURNER

CONDENSATE RECYCLE TO/FROM CV-38

ESDV CB-7
ESDV CB-1
ESDV CB-2
ESDV CV2C-2 & 4
ESDV CB-3
ESDV CH1-2

ESDV CV1B-5
ESDV CV1B-4
ESDV CV2B-8
ESDV CV1B-5
ESDV CV1B-6
ESDV CV2B-8
ESDV CV1C-5
ESDV CV1C-6
ESDV CV2B-8
ESDV CV2A-3
ESDV CV2B-3
ESDV CV2E-3
ESDV CV1C-7
ESDV CH1-2
ESDV CV2-1
ESDV CH1-3
ESDV CH2-3
ESDV CV2E7
ESDV CV2C-6

ESDV CB-5
ESDV CB-4
ESDV CB-6
ESDV CH1-4

CONDENSATE TO/FROM TP1 (LP)
WET L.P. GAS FROM TP1
WET H.P. GAS TO TP1
DRY GAS TO/FROM TP1
CONDENSATE TO/FROM TP1 (HP)
WET GAS TO/FROM TP1

GROUP 'V'

COMPRESSOR SUCTION TRAIN MAIN PRESSURE RELIEF.
SPARE 'A' L.P. GAS TO FUTURE COMPRESSOR - PRESSURE RELIEF.
SPARE 'A' L.P. GAS TO COMPRESSOR 'A' PRESSURE RELIEF.
SPARE 'A' H.P. GAS TO COMPRESSOR 'A' PRESSURE RELIEF.
SPARE 'B' L.P. GAS TO FUTURE COMPRESSOR - PRESSURE RELIEF.
SPARE 'B' H.P. GAS TO COMPRESSOR 'B' PRESSURE RELIEF.
SPARE 'C' L.P. GAS TO FUTURE COMPRESSOR - PRESSURE RELIEF.
SPARE 'C' H.P. GAS TO COMPRESSOR 'C' PRESSURE RELIEF.
SPARE 'C' H.P. GAS TO COMPRESSOR 'C' PRESSURE RELIEF.
CANCEL COMPRESSOR - PRESSURE RELIEF.
CANCEL COMPRESSOR - PRESSURE RELIEF.
CANCEL COMPRESSOR - PRESSURE RELIEF.
SEPARATORS INLET HEADER POSSIBLE RELIEF.
FUTURE GAS COMPRESSOR INLET HEADER PRESSURE RELIEF.
FUTURE GAS COMPRESSOR OUTLET HEADER PRESSURE RELIEF.
WET GAS TO/FROM TP1 PRESSURE RELIEF.
SEPARATORS INLET HEADER PRESSURE RELIEF.
BOTTOM SURGE GAS HEADER PRESSURE RELIEF.
DRY GAS TO/FROM TP1 PRESSURE RELIEF.

GROUP 'W'

WET L.P. GAS FROM TP1 PRESSURE RELIEF.
WET H.P. GAS TO TP1 PRESSURE RELIEF.
DRY GAS TO/FROM TP1 PRESSURE RELIEF.
WET GAS TO/FROM TP1 PRESSURE RELIEF.

GROUP 'X'

DESIGN	ELEC.	INSTR.	PIPING	PROCESS	NO	BY	DATE	REVISIONS
					7	DP	22 NOV 77	ADDED: CH5-14 & CH8-27
					6	DP	9 MAY 77	SERIES WAS PARALLEL (NOTE 3)
					5	RG	23 SEP 76	ESDV CV2C-7 WAS TO ESDV-CB-6 WAS -3
					4	E.H.	11 APR 76	P.V. TO P.C. & MATCHLINE ADDED TITLE REVISED
					3		26-1-76	CONDENSATE SYSTEM REVISED ALSO ELEC. FUNCTIONS TO BE RECORD TO NEW SHT
					2	JT	18-9-75	Note 2 Added, Instr Tag No's Revised
					1	CD	12-7-75	APPROVED FOR CONSTRUCTION
					0	CD	28-5-75	ISSUED FOR CLIENT APPROVAL

FAB. STDS. REQ'D. THIS SHT

CUSTOMER APPROVAL
BY:
DATE: 05.08.75

APPROVED
DATE: Aug 5 1975
ENGINEERS APPROVAL

DESIGNED	BY	DATE
PROJECT	ROY	1.8.75
STRUCTURAL		
PIPING		1.8.75
INSTRUMENT		1.8.75
ELECTRICAL		1.8.75
INSTRUMENT	DH	28.7.75
TAG CHECK	RHZ	5.8.75
PROP. CHECK		

ELF - NORGE
FRIGG FIELD

TREATMENT / COMPRESSION PLATFORM No.2

NORTH SEA JOB 1-40-E2 W.D. 104-M.

McDERMOTT - HUDSON
LONDON - ENGLAND

DRAWN BY	SCALE	DATE	DWG NO
C. DALY	NONE	1st MAY 1975	ELN 2169
DESIGNED BY			SHEET NO C 7002

SHUTDOWN LOGIC DIAGRAM (PROCESS)

4

SHEET NO. C7003

ELN 2169

MATCHLINE FOR CONTINUATION SEE DRG. No ELN 2169-C7002

1st LEVEL

2nd LEVEL

3rd LEVEL

4th LEVEL

5th LEVEL

ISOLATE 3.3KV. RING ACB's

GAS DETECTION IN COMMON VENT INLET 60% LEL

CLOSE MAIN A/C. INLET DAMPER No AD1

AIR CONDITIONING ROOM

BATTERY ROOM

TRANSFORMER ROOM

INSTRUMENT INTERFACE ROOM.

EMERGENCY EQUIPMENT ROOM

M.C.C. ROOM

CABLING AREA

AIR CONDITIONING ROOM

SWITCH GEAR ROOM.

GENERATOR ROOM

S/D GEN. TURBINE HOOD VENT FANS & CLOSE MAIN DAMPERS & GEN. ROOM DAMPERS.

DAMPER Nos AD1, 5, 6 & 8

GAS DETECTION IN AIR COOLED CONDENSER INLET 60% LEL

GAS DETECTION IN EMERGENCY INLET 60% LEL

FIRE DETECTION IN ROOM

FIRE DETECTION IN ROOM

GAS DETECTION IN TRANS VENT INLET 60%

FIRE DETECTION

GAS DETECTION IN EMERG. STANDBY INLET

FIRE DETECTION

FIRE DETECTION

FIRE DETECTION

FIRE DETECTION

FIRE DETECTION

FIRE DETECTION UNDER TURBINE HOOD

FIRE DETECTION UNDER TURBINE HOOD

FIRE DETECTION UNDER TURBINE HOOD

FIRE DETECTION GENERATOR ROOM

TA4 TA5 TA6 SHUTDOWN TURBINES ON LOSS OF AIR FLOW

TRIP AIR COOLED CONDENSER MOTOR, TRIP REFRIDGERANT COMPRESSOR MOTOR & CLOSE DAMPERS

DAMPER Nos AD4 & 45.

TRIP EMERGENCY EXTRACT FAN & CLOSE EMERGENCY DAMPERS.

DAMPER Nos ED2 & 3.

S/D FANS CLOSE DAMPERS-START EMERGENCY EXTRACT FAN ON GAS DETECTION ONLY.

DAMPER Nos AD28, 29, 30, 31 & 32

S/D FANS & CLOSE DAMPERS.

DAMPER Nos AD25, 26 & 27.

RELEASE HALON

SEE NOTE 2 TYPICAL FOR ALL VALVES

SEE NOTE 2

TIME DELAY

RELEASE HALON

CLOSE FIRE DAMPERS

DAMPER Nos FDP1 & 2

CLOSE FIRE DAMPERS

DAMPER Nos FDP3 & 4

CLOSE FIRE DAMPERS

DAMPER Nos FDP5 & 6

S/D GENERATOR ROOM DAMPERS

DAMPER Nos AD5, 6 & 8.

GAS AT 60% LEL UNDER TURBINE HOOD

GAS AT 60% LEL UNDER TURBINE HOOD

GAS AT 60% LEL IN FUEL MODULE VENT DUCT

GAS AT 60% LEL IN FUEL MODULE VENT DUCT

GAS AT 60% LEL IN ELEC. MODULE VENT DUCT

TRIP 3 FIRE DAMPERS TO INTERFACE ROOM

DAMPER Nos FDP8, 9 & 10.

GAS AT 15% LEL IN TURBINE INLET T4

GAS AT 15% LEL IN TURBINE INLET T5

GAS AT 15% LEL IN TURBINE INLET T6

S/D COMMON AIR CONDITIONING FANS CLOSE DAMPERS START EMERGENCY VENT FAN FOR EMERGENCY EQUIPMENT ROOM

DAMPER Nos AD7, 9, 10, 11, 12, 13, 14, 15, 16, 17, 18, 19, 20, 21, 22, 23, 24, 45 & 46.

TRIP EMERGENCY VENT FAN FOR EMERGENCY EQUIPMENT ROOM

TRIP EMERGENCY EQUIPMENT ROOM FIRE DAMPERS.

DAMPER Nos FDP11 & 12.

TRIP BATTERY ROOM FIRE DAMPERS.

DAMPER No FDP7.

TRIP ALL BATTERY CHARGERS

ANY 2 OUT OF 3 CAUSES SHUTDOWN OF ALL THREE TURBINES

STOP TURBINE T4

STOP TURBINE T5

STOP TURBINE T6

GAS DETECTION IN VENT INLET 60% LEL

FIRE DETECTION INSIDE BUILDING

GAS DETECTION IN VENT INLET 60% LEL

FIRE DETECTION INSIDE BUILDING

GAS DETECTION IN VENT INLET 60% LEL

FIRE DETECTION INSIDE BUILDING

SHUTDOWN FANS & CLOSE DAMPERS IN FIREPUMPHOUSE No.1 (PUMPCPG4)

DAMPER Nos AD 40 & 41

SHUTDOWN FANS & CLOSE DAMPERS IN FIREPUMPHOUSE No.2 (PUMPCPG5)

DAMPER Nos AD 42 & 43

SHUTDOWN FANS & CLOSE DAMPERS IN WORKSHOP STORES MESS ROOM & TOILETS. CLOSE FIRE DAMPER

DAMPER Nos AD 47, 48, 49, 50, 51 & FDP13.

PRESSURE LOSS

PRESSURE LOSS

PRESSURE LOSS

ISOLATE NON ESSENTIAL ELECTRICAL SUPPLIES IN FIREPUMPHOUSE No.1 (LOCATED IN PROCESS AREA)

ISOLATE NON ESSENTIAL ELECTRICAL SUPPLIES IN FIREPUMPHOUSE No.2 (LOCATED IN PROCESS AREA)

ISOLATE NON ESSENTIAL ELECTRICAL SUPPLIES IN WORKSHOP & STORES (LOCATED IN PROCESS AREA)

ISOLATE NON ESSENTIAL ELECTRICAL SUPPLIES IN PROCESS AREA (SEE NOTE 3)

DIESEL GENERATOR START-UP OCCURS ONLY WHEN 380V POWER IS LOST IN BOTH TP1 & TP2. REFERENCE DRAWING ELN 2169-C6003

REFERENCE

DATE 10 FEB 1978

NOTES

1. FOR GENERAL NOTES, LEGEND & REFERENCE DRGS. SEE DRG. No ELN-2169-C7001.
2. ALL HALON RELEASE SOLENOID VALVES HAVE A BUILT IN TIME DELAY TO ALLOW THE FANS TO STOP & DAMPERS TO CLOSE. IN ADDITION THE M.C.C. ROOM SOLENOID VALVE HAS FURTHER DELAY TO ALLOW PERSONNEL EVACUATION. SEE FIRE & GAS LAYOUTS FOR OTHER MANUAL RELEASES.
3. ALL ELECTRICAL SUPPLIES IN PROCESS AREA TO BE ISOLATED EXCEPT FOR THE FOLLOWING:-
   a) ALARM SYSTEMS
   b) PUBLIC ADDRESS SYSTEMS
   c) LIGHTING & NAVIGATION AIDS
   d) SHUTDOWN SYSTEM
   e) TELEPHONE SYSTEM
   f) GAS DETECTION SYSTEM
   g) FIRE DETECTION SYSTEM
   h) TELEMETRY SYSTEM.
4. AD — AUTOMATIC DAMPER
   ED — EMERGENCY AUTOMATIC DAMPER
   FDP — FIRE DAMPER.

FAB. STDS. REQ'D. THIS SHT	DESIGN	ELEC.	INSTR.	PIPING	STRUCT	NO.	BY	DATE	REVISIONS	DATE	APP.

All microphone inputs will broadcast over the public address system however ranking of the inputs is provided to prevent more than one entry.

Alarm signals are broadcast over the whole of the Public Address System on all speakers and on all platforms simultaneously.

The alarm signals are as follows:

(a) Muster Alarm - consisting of a continuous signal

(b) Fire Alarm - consisting of an intermittent signal of one second duration with a one second interval in between

The above signals are at 400 Hz and are square fronted signals.

(c) Abandon Alarm - this is given by a verbal command over the P.A. system after the Muster Alarm.

The Fire Alarm is initiated automatically by either the fire or gas detection systems on any platform. Manual operation is also available on the Quarters Platform Control Desk and by fire alarm buttons.

The P.A. system is normally fed from a maintained 220 volt essential supply with a 24 hour diesel generator back-up. On loss of the 220 volt supply, the P.A. system is fed from a battery/ invertor supply. The battery has the capacity to maintain the P.A. system at full power output for a further half hour.

4.1.2.5 Telephone System

An internal telephone system is used for communication between the various platforms. In this system there are 58 telephones on the Quarters Platform, 15 telephones on Treatment Platform No. 1, 14 telephones on TCP2, and 17 telephones on Drilling Platform No. 1, and 17 telephones on Drilling Platform No. 2.

These telephones are mainly for direct communication between platforms. However, it is also possible to call to Norway on these telephones.

4.1.3 Principles of Design Process

The main functions of production platform TCP2 are to:

a) Dehydrate the natural gas supplied from Drilling Platform No. 2 DP2 and send it to Scotland via a sub-sea line.

b) Dehydrate the condensate from DP2 and send it to Scotland.

c) Provide a gathering station for Frigg Field gas and two possible future Total Oil Marine gas fields.

d) Provide space for future Total Oil Marine compression facilities.

e) Act as the principal supplier or electrical power for TCP2 and DP2 via interconnecting cables. This system is further interlinked on a ring main principle to TP1, QP and CDP1.

4.1.3.1 Process Description

Wet gas from Drilling Platform No. 2 enters TCP2 through pig receivers CM1 and/or CM2 into a 26" manifold. From this manifold, gas can be directed to any of the FWKO Separators, CV1A, CV1B or CV1C where gas and free liquid are separated. These separators, together with three glycol contactors, from three parallel streams through which the gas is processed. Two of these streams are for normal use with the third serving as a spare. Each Separator and contactor is rated for 15×10^6 SCMD (529.65×10^6 SCFD).

Gas from each FWKO separator exits the vessel into separate 20" lines which later swage down to 18" and flow directly to the corresponding Glycol Contactor, CV2A, CV2B or CV2C. There is a compressor return 18" line for each stream into the inlet lines to V2A, B C. It is not anticipated to use the TCP2 compressors until the operating pressure in V2A, B C falls below 150 Bars.

Any liquid recovered in the FWKO Separator is released into a single 12" hydrocarbon dump header which goes to the Condensate Surge Tank V3.

The gas passes through the Glycol Contactors which treat the gas so that the existing stream has a water dew point of no greater than -5°C at 150 bars (21°F at 2175 PSIA). Triethylene glycol, which is used to treat the gas, flows from each contactor back to separate glycol regeneration system (CQ1, A B C) where it is regenerated for further use. Gas exits the Glycol Contactors in separate 18" lines which are individually metered. After the gas is metered, it flows through a set of pressure reset flow control valves arranged in parallel which control the pressure through each stream. The gas from each stream then flows into a common 32" sales gas header which passes through pig launcher CM3 and enters the pipeline to St. Fergus, Scotland.

Condensate Surge Tank, CV3 receives any condensate produced from the FWKO Separators and also receives the condensate produced on Drilling Platform No. 2. From this tank, the condensate is pumped through Coalescer CV4 to remove any water from the condensate and then back into the sales gas line leaving the platform. This is a BS and W monitor following the coalescer which will cause the condensate to be re-cycled back into the condensate Surge Tank should

the water content be too high. In the event of surges entering the Condensate Surge Tank, CV3, a high level switch will open an outlet to the Condensate Storage Tank, V33. From here the condensate can either be recycled back to the Condensate Surge Tank, burnt via Condensate Burners M17A & B, or sent to the Condensate Storage Tank CV38.

Other facilities provided include:

a) L.P. vent system with scrubber V7 and inverted gas seal discharging into a 75ft. high vent stack.

b) H.P. relief system, complete with scrubber TCP2 H.P. relief system (with scrubber) connects into the TP1 relief system, whence a common line discharges to a flare stack located 1510ft. away from TP1.

c) Methanol Storage and pumps for injection into Scottish sales gas subsea-line if hydrate formation becomes a problem.

d) General utility systems - diesel, glycol, air drainage.

4.1.4 Principles of Mechanical Design

The basis of mechanical design was the information relating to vessels, pumps etc., initially obtained from the Process Flow Diagrams. Therefore, the following codes and regulations were used in the design of the equipment listed below:

Pumps	- API standard 610 'Centrifugal Pumps for General Refinery Services'
Pressure Vessels	- British Standard 1515
Pipework	- ANS 1 B31.3 petroleum refinery piping ANS 1 B31.8 gas transmission and distribution of piping system
Thermal Insulation	- British Standard code of practice CP3005: 1965
Fire Pumps	- N.F.P.A. 20 - installation of centrifugal pumps

All the equipment was designed in strict accordance with these standards and codes of practice together with the additional requirements of the relevant certifying authority.

Emphasis was placed on maximum reliability, ease of maintenance and compactness. All equipment was designed to be exposed to a severe salt water atmosphere, 100% humidity, air temperature of -15°C to 32°C and maximum wind speeds of 129 knots.

4.1.4.1 Fire Water System

The fire water pumps which a re located on pancake 07 and on the cellar deck area, can be activated automatically or manually. The pump is automatically started by the fire detectors located througout TCP2 or by fire detectors located on platforms TP1 and QP.

Manual start is initiated from the control room on QP and from any fire alarm button on QP, TP1 or TCP2. Besides these remote starting locations, manual start push buttons (one for electric start, and one for pneumatic) are located behind a break glass window for emergency use. Any button starts all fire water pumps on QP, TP1 and TPC2. A failsafe pneumatic system is tied into the activation system for fire water pump engine start. Pneumatic lines complete with volume bottles are linked between the Quarters Platform and Treatment Platforms. Once a start signal has been initiated from any of the remote locations a sequence start is activated on the engine. An automatic electric start sequence of 6 attemps of 15 seconds duration will occur and if this fails to start the engine, an automatic sequence using nitrogen of 6 attemps of 15 seconds duration occurs. Should both sequences fail, an alarm and annunicator point will be activated in the control room. All fire water pumps feed into a common fire water ring main.

The fire water pumps are rated at 7570 l/min at 9.63 Bars. Abs. (2000 GPM at 125 Psig) at the pump head.

The fire water systems and washdown system (see section 4.1.4.2) are interconnected with a check valve such that the washdown system can operate on its own or as part of the fire water system. Fire monitors, fire hose reels, and washdown hose reels are positioned throughout the platform and a fire at any location can be fought by at least two of these fire-fighting positions.

4.1.4.2 Washdown System

For general washdown around the platform a washdown pump and hose reels have been provided. The washdown pump is rated at 1892 l/min at 9.63 Bars Abs. (500 U.S. G.P.M. at 125 Psig) at the pump head and driven by a 75 KW electric motor.

A start/stop button is located at each of the 19 hose reel stations for manual operation of the pump.

These hose reels are primarily for washdown but also will receive water from the fire water system in case of emergency (see section 4.1.4.1).

Interconnections between Platforms

4.2.1 Process Interconnections

The platforms on the Frigg Field are inter-linked to provide a high degree of operational flexibility. TCP2 is linked via subsea lines to DP2 and Scotland, and via a bridge to TP1. These links are as follows:

1) DP2
   Wet Gas Supply Line
   Condensate Supply
   H.P. Mud

2) Scotland
   Main Sales Line

3) TP1 via Bridge
   Inlet Wet Gas Lines.
   Outlet By gas Headers
   Treated Condensate

Utilities Interconnections

TCP2 utilities systems are connected via the bridge to TP1. These connections are as follows:

Methanol, Diesel Oil, Fuel Gas, Glycol, Air, Relief, Fresh & Firewater Systems.

Utilities Interconnections

Electrical Interconnections

4.2.2 Electrical Interconnections

The TP1 - TCP2 bridge carries the following electrical supplies:

(a) 5.5 kV cables - the cables for the TP1/TCP2 and QP/TCP2 legs of the H.V. ring circuit - see section 4.1.1

(b) 380 volt cable - for the supply of the emergency life support systems on TCP2 from the QP emergency generators

(c) Nav. Aids Cabling - As described under section 4.1.1.7

Instrument Interconnections

4.2.3 Instrument Interconnection

The platform Q.P. control room is the central control point for the entire Frigg Field complex. The centre will provide control data processing for TP-1, TCP-2, CDP1 and DP-2. All process data is recorded on the telemecanique computer system for either transmittal to U.K. or Norway. The computer also provides process control functions to TP-1 and TCP-2.

The main control panel houses the mimic display for all process functions taking place on TP-1 and TCP-2, plus fire and gas detection displays and power generation displays. Data, alarm and control transmission is via the 'CETT' telemetry system.

Operating data for CDP1 and DP-2 is also displayed and recorded on panels adjacent to the appropriate treatment platform mimic. The control desk is sited facing the main control panel and houses indicators displaying 32" sea line gas characteristics, well selector buttons, CRT graphic display computer addressed read outs.

The emergency shutdown pushbutton cabinet is located to the rear of the control desk and is telemetry linked to TP-1 - DP-1 - TCP-2 and DP-2 providing remote shutdown facilities to the complex.

Communication

4.2.4 Communication

An internal telephone system is used for communication between the various platforms. It is also possible to call to Norway on these telephones and a direct link via the tropospheric scatter system to the United Kingdom, tied into the U.K. public telephone exchange (Aberdeen).

The P.A. and Alarm Control Panel and Amplifier racks are located in the Q.P. Telex Room adjacent to the Control Room.

The P.A. Alarm System is manufactured by Brodene Steen - Hansen of Norway, model number PEGFA Mark 25,000A1, 2, 4/2500 - 3 x 26 - SV, the output of which is 2500 watts - 1500 watts for Q.P. and TP-1 platforms and 1000 watts for TCP-2 platform.

The public address is based on a common call or voice paging loudspeaker system. All microphone inputs will broadcast over the public address system, however, ranking of the inputs is provided to prevent more than one entry.

Alarm signals are broadcast over the whole of the public address system on all speakers simultaneously.

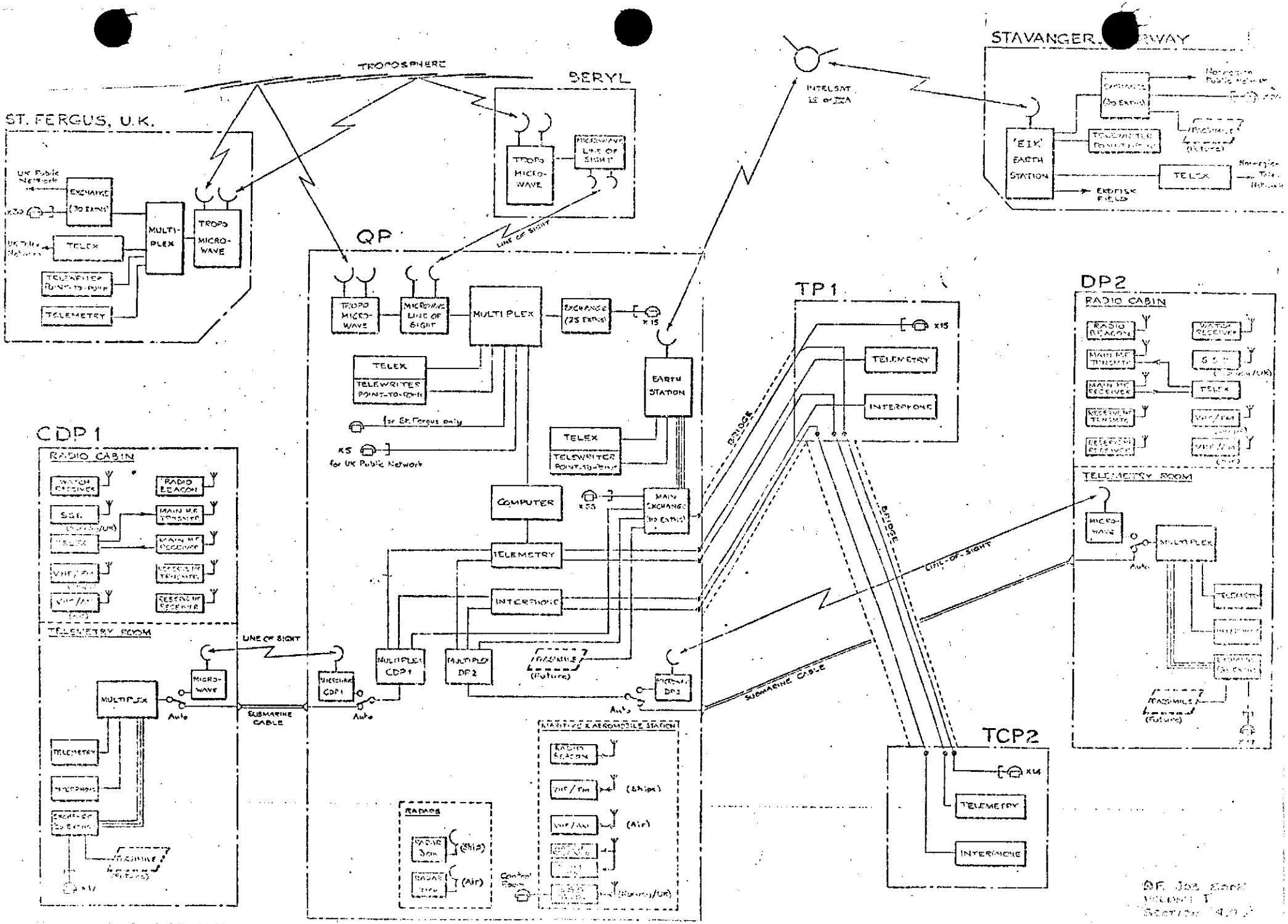

TROPOSPHERE
BERYL
ST. FERGUS, U.K.
STAVANGER, NORWAY
INTELSAT
'EIK' EARTH STATION
TELEX
EKOFISK FIELD
TROPO MICRO-WAVE
MICROWAVE LINE OF SIGHT
LINE OF SIGHT
QP
TROPO MICRO-WAVE
MICROWAVE LINE OF SIGHT
MULTIPLEX
EXCHANGE (25 EXTNS)
x15
TELEX
TELEWRITER POINT-TO-POINT
for St. Fergus only
x5
for UK Public Network
EARTH STATION
TELEX
TELEWRITER POINT-TO-POINT
COMPUTER
x55
MAIN EXCHANGE (110 EXTNS)
TELEMETRY
INTERPHONE
MULTIPLEX CDP1
MULTIPLEX DP2
PASSIMILE (Future)
MICROWAVE DP2
Auto
SUBMARINE CABLE
MARITIME & AEROMOBILE STATION
RADIO BEACON
VHF/FM
(Ships)
VHF/AM
(Air)
RADARS
RADAR 3cm
(Ship)
RADAR 3cm
(Air)
Control Room
TP1
x15
TELEMETRY
INTERPHONE
BRIDGE
BRIDGE
LINE-OF-SIGHT
SUBMARINE CABLE
TCP2
x14
TELEMETRY
INTERPHONE
DP2
RADIO CABIN
RADIO BEACON
WATCH RECEIVER
MAIN MF TRANSMTR
MAIN MF RECEIVER
TELEX
RESERVE MF TRANSMTR
RESERVE MF RECEIVER
VHF/FM
VHF/AM
TELEMETRY ROOM
MICRO-WAVE
MULTIPLEX
Auto
TELEMETRY
INTERPHONE
EXCHANGE (30 EXTNS)
PASSIMILE (Future)
CDP1
RADIO CABIN
WATCH RECEIVER
RADIO BEACON
SSB
MAIN MF TRANSMTR
TELEX
MAIN MF RECEIVER
VHF/FM
RESERVE MF TRANSMTR
VHF/AM
RESERVE MF RECEIVER
TELEMETRY ROOM
LINE OF SIGHT
MICRO-WAVE
MULTIPLEX
Auto
SUBMARINE CABLE
TELEMETRY
INTERPHONE
EXCHANGE (30 EXTNS)
PASSIMILE (Future)
x17

Main P and ID's

DWG. NO. ELN 2169 | SHEET NO. C4038

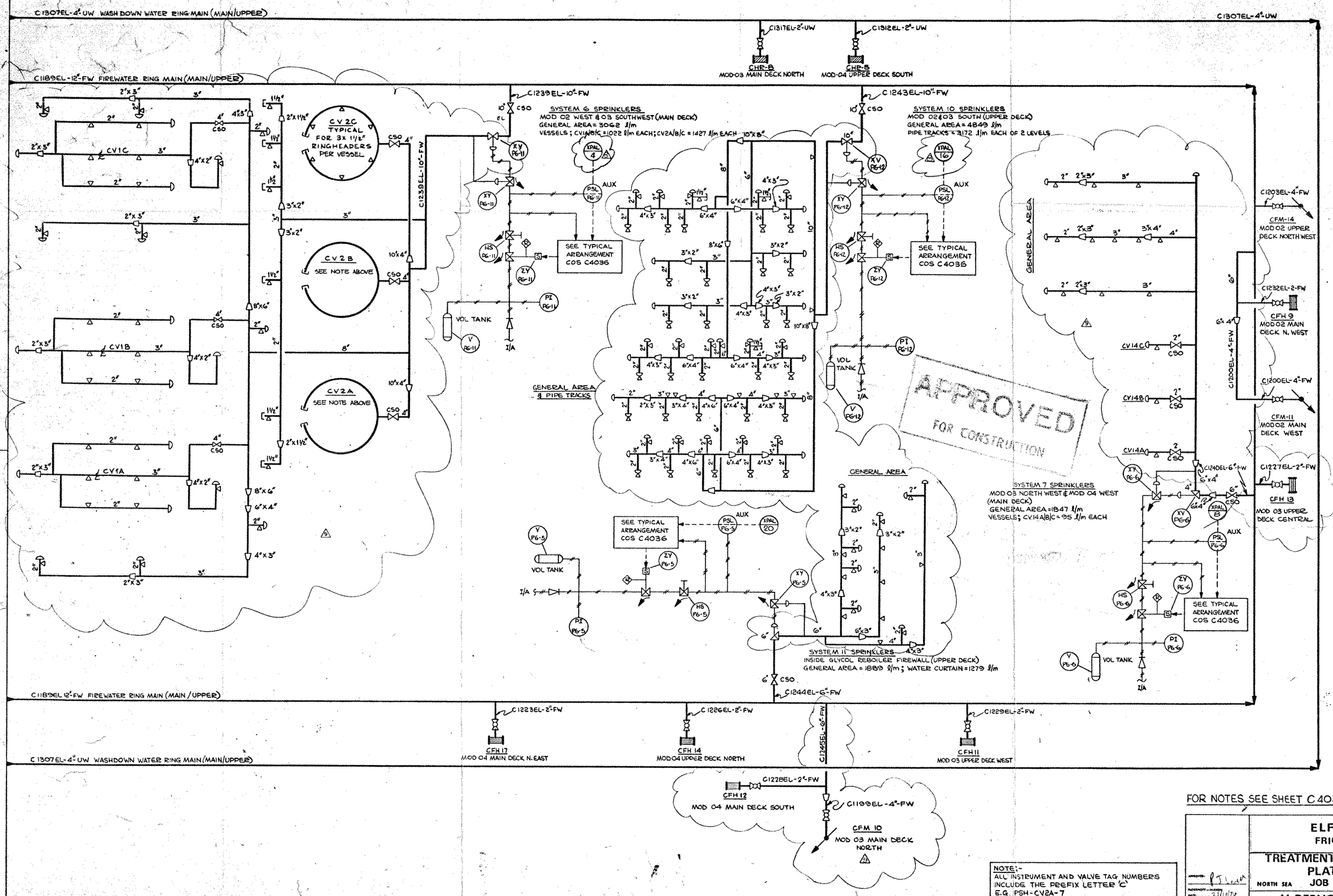

FOR NOTES SEE SHEET C4036

NOTE:-
ALL INSTRUMENT AND VALVE TAG NUMBERS INCLUDE THE PREFIX LETTER 'C'
E.G. PSH-CV2A-7

NO.	BY	DATE	REVISIONS	DATE	APP.
7	DL	23-9-76	REDRAWN FROM ELN2169-C4022&23	21/10	
6	JGY	9-4-76	SEE REVISION LIST		
5	JGY	28-11-75	RE-APPROVED FOR CONSTRUCTION		
4	BW	24-10-75	RE-ISSUED FOR CLIENT APPROVAL		
9	MS	12/8/77	SEE REVISION LIST	8-9-77	
8	JP	27/4/77	SEE REVISION LIST		

CUSTOMER APPROVAL
BY: [signature]
DATE: 24.10.76

ELF-NORGE
FRIGG FIELD

TREATMENT / COMPRESSION PLATFORM No.2
NORTH SEA JOB 1-40-E2 W.D. 104-M.

McDERMOTT — HUDSON
LONDON — ENGLAND

	BY	DATE
PROJECT		21/10
STRUCTURAL		
PROCESS		18 OCT 76
MECHANICAL		17.10.76
ELECTRICAL		21.10.76
INSTRUMENT		21.10.76
FAB. CHECK		
PROP. CHECK		

APPROVED: [signature]
McDERMOTT — HUDSON
DATE: 21/10/76
ENGINEERS APPROVAL

DRAWN BY	SCALE	DATE	DWG NO.
D. LOWES		12TH SEPT 76	ELN 2169
DESIGNED BY			SHEET NO.
[signature]			C4038

WASHDOWN AND FIREWATER UTILITY FLOWSHEET MAIN AND UPPER DECKS

DWG. NO. ELN 2169 | SHEET NO. C4037

C1188EL-12"-FW FIREWATER CROSSOVER FROM CELLAR RING MAIN

TO FUTURE TREATMENT AREA

C1307EL-4"-UW WASH DOWN WATER RING MAIN (MAIN/UPPER)

C1189EL-12"-FW FIREWATER RING MAIN (MAIN/UPPER)

C1318EL-2"-UW — CHR-4 MOD-01 UPPER DECK WEST

C1319EL-2"-UW — CHR-6 MOD-02 MAIN DECK WEST

C120BEL-6"-FW

CFH-8 MOD 01 MAIN DECK WEST

C1234EL-2"-FW

C1318EL-2"-UW — CHR-9 MOD-01 MAIN DECK SOUTH

C1233EL-8"-FW

C1201EL-4"-FW — CFM-12 MOD-01 MAIN DECK SOUTH-WEST

C1306EL-4"-UW WASHDOWN WATER CROSS-OVER FROM CELLAR RING MAIN

SYSTEM 5 SPRINKLERS
MODULE 01 WEST (MAIN DECK)
GENERAL AREA = 1987 ℓ/m
VESSELS; CV3=1525 ℓ/m; CM9=68 ℓ/m

XPAL 2 — PSL P6-7 AUX — SEE TYPICAL ARRANGEMENT COS C4036

V P6-7 VOL TANK — I/A

ZY P6-7 — S — R — HS P6-7 — PZ P6-7

XY P6-7

C1230EL-6-FW

C1204EL-4"-FW — CFM-13 MOD-01 UPPER DECK WEST

C1231EL-2"-FW — CFH-10 MOD-01 UPPER DECK-WEST

C1209EL-6"-FW

C1202EL-4"-FW — CFM-15 MOD-01 MAIN DECK SOUTH

C1223EL-6"-FW

CM9 — CV3 — GENERAL AREA

MAIN & UPPER DECKS

SEE TYPICAL ARRANGEMENT COS C4036

V P6-14 VOL TANK — I/A — PI P6-14

ZY P6-14 — S — R — HS P6-14

PSL P6-14 AUX

XV P6-14

CFM-7 MOD-01 UPPER DECK EAST

CFH-18 MOD-01 UPPER DECK EAST — C1221EL-2"-FW

C1205EL-4"-FW

C1241EL-8"-FW

SYSTEM 8 SPRINKLERS
MODULES 01/02/03/04 EAST (MAIN DECK)
GENERAL AREA = 2093 ℓ/m
PIPE TRACK = 3346 ℓ/m

SYSTEM 9 SPRINKLERS
MODULE 01 EAST (UPPER DECK)
GENERAL AREA = 1064 ℓ/m
VESSEL CM3 = 458 ℓ/m

C1242EL-6"-FW

4" FUTURE CONN FOR CM15 & GENERAL AREA

CM3 — GENERAL AREA — PIPE TRACK — GENERAL AREA

XV P6-8 — XPAL 14 — PSL P6-8 AUX — SEE TYPICAL ARRANGEMENT COS C4036

HS P6-8 — ZY P6-8 — S — R

PI P6-8 — VOL TANK — V P6-8 — I/A

CFH-15 MOD 02 MAIN DECK EAST

C5P-30C FOAM UNIT — FOAM LIQUID

CFH-16 MOD. 02 UPPER DECK CENTRAL — C1224EL-2"-FW

C1225EL-2"-FW

C1344EL-4"-UW — TO FUTURE COMPRESSION AREA

C1119EL-12"-FW FIREWATER RING MAIN (MAIN/UPPER)

C1197EL-4"-FW — C1198EL-4"-FW

CHR-7 MOD 02 UPPER DECK SOUTH — C1314EL-2"-UW

CFM-8 MOD 02 MAIN DECK EAST — C1235EL-12"-FW

CFM-9 MOD 03 MAIN DECK EAST

C1307EL-4"-UW WASHDOWN WATER RING MAIN (MAIN/UPPER)

C1188EL-12"-FW FIREWATER CROSS-OVER FROM CELLAR RING MAIN

C1306EL-4"-UW WASHDOWN WATER CROSS-OVER FROM CELLAR RING MAIN

C1101EL-10"-FW — FROM FIREWATER PUMP CP6A COS C4021

TO FUTURE COMPRESSION AREA

FOR NOTES SEE SHEET C4036

APPROVED FOR CONSTRUCTION

2 NOV 1977

FAIL. STDS. REQ'D. THIS SHT.

NO.	BY	DATE	REVISIONS
9	MS	11/8/77	SEE REVISION LIST
8	JF	2/2/77	SEE REVISION LIST
7	DL	23 9 76	RE-DRAWN FROM ELN 2169 4022 & 4025
6	JGV	9-4-76	SEE RE-VISION LIST
5	JGV	28-11-75	RE-APPROVED FOR CONSTRUCTION
4	GW	24-10-75	RE-ISSUED FOR CLIENT APPROVAL

CUSTOMER APPROVAL BY ____ DATE 21.10.76

APPROVED ____ PRODUCTION — DUNBAR DATE: 21/10/76

ENGINEERS APPROVAL

	BY	DATE
PROJECT	[illegible]	21/10/76
STRUCTURAL		
PROCESS	L.R.S.	18/10/76
MECHANICAL	[illegible]	19/10/76
ELECTRICAL	[illegible]	20/10/76
INSTRUMENT	[illegible]	20/10/76
P&R CHECK		
PROJ. CHECK		

ELF – NORGE
FRIGG FIELD
TREATMENT / COMPRESSION PLATFORM No.2
NORTH SEA JOB 1-40-E2 W.D. 104-M.
McDERMOTT – HUDSON
LONDON – ENGLAND

DRAWN BY	SCALE	DATE	DWG NO.
D. LOWES	NONE	11TH SEPT' 76	ELN 2169
DESIGNED BY N.R. Wamsley		ZONE NO. 00	SHEET NO. C4037

WASHDOWN AND FIREWATER UTILITY FLOWSHEET MAIN AND UPPER DECKS

DWG. NO. ELN 2169 | SHEET NO. C4036

C1188EL-12"-FW — FIREWATER CROSSOVER TO MAIN / UPPER RINGMAIN — C1188EL-12"-FW

C1302EL-4"-UW — WASHDOWN WATER RING MAIN (CELLAR)

C1105EL-12"-FW — FIREWATER RING MAIN (CELLAR) — C1105EL-12"-FW

CFM-3 PANCAKE 07 SOUTH

C1192EL-4"-FW

C1196EL4"-FW

CFM-6 PANCAKE 07 N. EAST

C1218EL-2"-FW

CFH-6 PANCAKE 07 N.WEST

C1236EL-10-FW 10"

SYSTEM 2 SPRINKLERS
P/C 06,07, PSF-1 (PART)
GENERAL AREA = 5068 ℓ/m
PIPE TRACKS = 3740 ℓ/m
VESSELS CV4A/B = 2271 ℓ/m each
CV33 = 538 ℓ/m

CV4A

CV4B

CV33

MAIN DECK PANCAKES 06 & 07 & STEEL FLOOR AREA

SUPPORT FRAME Nº 2

TO ZY-P6-1 C0S C4021

FIREWATER PUMP PNEUMATIC START RELAY PANEL C0S C4021

FIRE ALARM BUTTONS ONE AT EACH MONITOR, FIREHOSE REEL & AT STRATEGIC PLACES

HEAT DETECTION
SMOKE ——
INFRA-RED – – –
ULTRA-VIOLET – · –

ESD CABINET FIREWATER PUMP START SYSTEM

QP ESD PANEL C0S ELN2111-B402

GAS DETECTORS LOCATED AT LIKELY SOURCES OF GAS THROUGHOUT THE PLATFORM

GAS DETECTION AT 60%LEL

TYPICAL ARRANGEMENT

C1306EL-4"-UW — WASHDOWN WATER CROSS-OVER TO MAIN / UPPER RING MAIN

C1308EL-2"-UW

CHR-1 PANCAKE 06 S.WEST

C1301EL-6"-UW

FROM WASHDOWN PUMP CP7 C0S C4021

FROM FIREWATER PUMP CP6B C0S C4021

C1303EL-10"-FW

CFM-4 STEEL FLOOR AREA N.WEST

C1194EL-4"-FW

C5P-38C FOAM UNIT

FOAM LIQUID

C1219EL-2"-FW

CFH-5 STEEL FLOOR AREA N. WEST

GENERAL AREA

PIPE TRACK

CV9 & CV23

SEE TYPICAL ARRANGEMENT ON THIS SHEET

C1237EL-8"-FW

C1310EL-2"-UW

CHR-3 STEEL FLOOR AREA NORTH

SYSTEM 3 SPRINKLERS
STEEL FLOOR AREA EAST
GENERAL AREA = 1628 ℓ/m
PIPE TRACKS = 1083 ℓ/m
VESSELS CV9 = 1412 ℓ/m
CV23 = 1412 ℓ/m

FIREWATER RING MAIN (CELLAR)

C1105EL-12"-FW

CFH-4 PANCAKE 09 NORTH

C1120EL-6"-FW

C1220EL-2"-FW

C1196EL-4"-FW

CFM-5 STEEL FLOOR AREA N. EAST

CV10

WASHDOWN WATER RING MAIN (CELLAR)

C1183EL-12"-FW

C1305EL-4"-UW

C1228EL-6"-FW

GENERAL AREA

SYSTEM 4 SPRINKLERS
PANCAKE 09 NORTH
GENERAL AREA = 1268 ℓ/m
VESSEL CV10 = 1412 ℓ/m

HOLD:
1. BROWN & ROOT CONNECTIONS.

CFH-3 STEEL FLOOR AREA S.EAST

C5P-38C FOAM UNIT

FOAM LIQUID

C1213EL-2"-FW

CFM-1 STEEL FLOOR AREA S.EAST

TO FUTURE COMPRESSION AREA

CFH-2 PANCAKE 06 EAST

C1214EL-2"-FW

TO FUTURE TREATMENT AREA

TO FUTURE COMPRESSION AREA

SUPPORT FRAME Nº 2

CM-1

CM-2

4"BF

C1212EL-10-FW

C1207EL-6"-FW

C0S

SEE TYPICAL ARRANGEMENT ON THIS SHEET

SYSTEM 1 SPRINKLERS
P/C 05, PSF-2, PSF-1 (PART)
GENERAL AREA = 3668 ℓ/m
PIPE TRACKS = 2267 ℓ/m
VESSELS CM1 = 352 ℓ/m
CM2 = 352 ℓ/m

CFM-1 PANCAKE 05 NORTH WEST

C1191 EL-4"-FW

CFM-2 PANCAKE 05 SOUTH WEST

C1309EL-2"-UW

CHR-2 PANCAKE 07 EAST

C1217EL-2"-FW

CFH-7 BRIDGE

FIXED POINT

TO/FROM FIREWATER RINGMAIN 1160 EL-12"-FW ON TP1 C0S ELN 2110 A416 SH1 2OF2

TCP2 TP-1

C1179EL 1236EL

C1183EL-12"-FW

FIREWATER CROSS OVER TO MAIN/UPPER RING MAIN

WASHDOWN WATER CROSS OVER TO MAIN/UPPER RING MAIN

NOTES:
1. ALL FIRE MONITORS ARE 1325 ℓ/m (350 USGPM) EACH.
2. ALL HOSE REELS ARE 379 ℓ/m (100 USGPM) AND 31M (100') LONG.
3. LOCATE EACH DELUGE VALVE AND IT'S PNEUMATIC VALVES ADJACENT TO AREA BEING SPRAYED ON THE SAME LEVEL.
4. EACH VESSEL SPRAY SYSTEM IS DESIGNED AT A FLOW DENSITY OF 10.2 ℓ/m/m².
5. EACH GENERAL AREA SPRAY SYSTEM IS DESIGNED AT A FLOW DENSITY OF 8.15 ℓ/m/m².
6. EACH PIPE TRACK SYSTEM IS DESIGNED AT A FLOW DENSITY OF 8.15 ℓ/m/m² MINIMUM. (BASED ON NFPA 15)
7. THE FIREWATER SPRAY CURTAIN ON THE TWO SEAWARD SIDES OF THE GLYCOL REBOILER AREA (UPPER DECK) IS DESIGNED AT A FLOW DENSITY OF 14.2 ℓ/m/m².

NOTE:
ALL INSTRUMENTS AND VALVE TAG NUMBERS INCLUDE THE PREFIX LETTER 'C' EG. PSH-CV2A-7.

APPROVED FOR CONSTRUCTION

2 NOV 1977

CUSTOMER APPROVAL BY: DATE 21.10.76

FAB. STDS. REQ'D. THIS SHT.	DESIGN	ELEC.	INSTR.	PIPING	STRUCT.	NO.	BY	DATE	REVISIONS
						9	UL	21/6/77	SEE REVISION LIST
						8	UP	23/6/77	SEE REVISION LIST
						7	JL	23-9-76	REDRAWN FROM ELN 2169 A0726
						6	JGY	9-4-76	SEE REVISION LIST
						5	JGY	28-11-75	RE-APPROVED FOR CONSTRUCTION
						4	BW	24-10-75	RE-ISSUED FOR CLIENT APPROVAL

APPROVED: P.S.L.W.
McDERMOTT – HUDSON
DATE: 4.11.77

ENGINEERS APPROVAL

	BY	DATE
PROJECT		
STRUCTURAL		
PROCESS		
MECHANICAL		
ELECTRICAL		
INSTRUMENT		
PIPE CHECK		
PROF. CHECK		

ELF – NORGE
FRIGG FIELD
TREATMENT / COMPRESSION PLATFORM No.2
NORTH SEA JOB 1-40-E2 WD. 104-M.
McDERMOTT – HUDSON
LONDON – ENGLAND

DRAWN BY	SCALE	DATE	DWG NO.
J.LUDOLF	NONE	12 SEPT. 1976	ELN 2169
DESIGNED BY		ZONE NO	SHEET NO.
A.B.WORSFOLD		00	C4036

WASHDOWN AND FIREWATER UTILITY FLOWSHEET CELLAR DECK

DWG NO. ELN 2169 SHEET NO. C4032

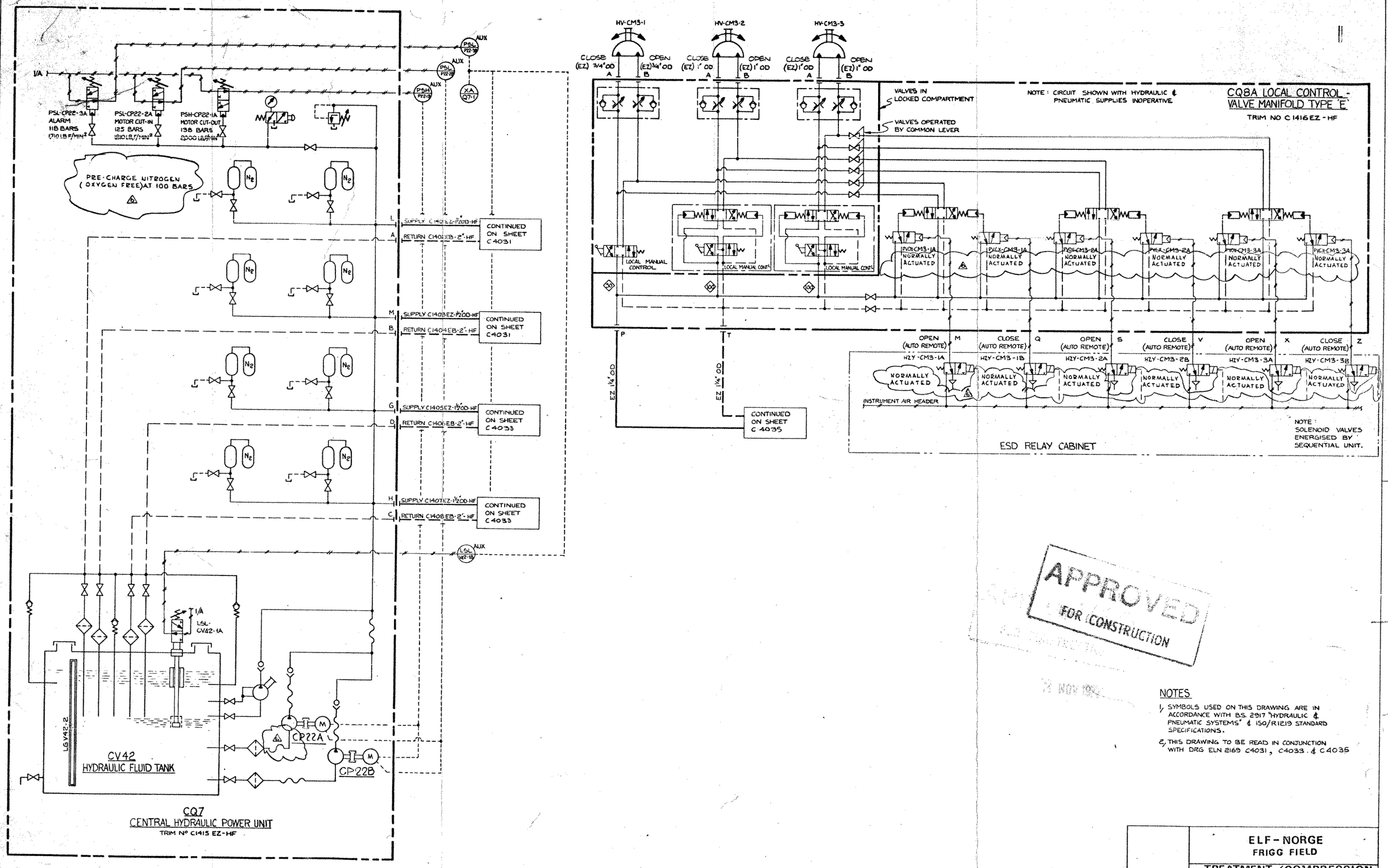

APPROVED FOR CONSTRUCTION

NOTES

1. SYMBOLS USED ON THIS DRAWING ARE IN ACCORDANCE WITH B.S. 2917 "HYDRAULIC & PNEUMATIC SYSTEMS" & ISO/R1219 STANDARD SPECIFICATIONS.
2. THIS DRAWING TO BE READ IN CONJUNCTION WITH DRG ELN 2169 C4031, C4033 & C4035

NOTE

ALL VALVE & INSTRUMENT TAG Nos INCLUDE THE PREFIX LETTER 'C' EG ESDV-CV2A-1

DESIGN	ELEC	INSTR	PIPING	STRUCT	NO	BY	DATE	REVISIONS	DATE	APP
					6	MS	19.8.77	SEE REVISION LIST	8-9-77	
					5	JP	29/2/77	SEE REVISION LIST		

DESIGN	ELEC	INSTR	PIPING	STRUCT	NO	BY	DATE	REVISIONS	DATE	APP
					4	JL	23.9.76	SEE REVISION LIST	21/10	
					3	BW	3-4-76	SEE REVISION LIST	20/4	
					2	GM	29-11-75	APPROVED FOR CONSTRUCTION	3/12	
					1	GM	31-10-75	ISSUED FOR CLIENT APPROVAL	3/11/75	

FAB. STDS. REQ'D. THIS SHT

APPROVED: Tony Dawson, McDERMOTT – HUDSON, DATE 5/11/75

ENGINEERS APPROVAL

	BY	DATE
PROJECT		3.11.75
STRUCTURAL		
PROCESS		3-11-75
MECHANICAL		31/10/75
ELECTRICAL		31/10/75
INSTRUMENT	MH	31/10/75
APP. CHECK		
PROP. CHECK		

CUSTOMER APPROVAL

BY: [signature]

DATE: 05.12.75

ELF-NORGE
FRIGG FIELD

TREATMENT / COMPRESSION PLATFORM No.2

NORTH SEA JOB 1-40-E2 W.D. 104-M.

McDERMOTT – HUDSON
LONDON – ENGLAND

DRAWN BY	SCALE	DATE	DWG NO
G. MEAGER	NONE	31ST OCT '75	ELN 2169
DESIGNED BY T. CURTIS		ZONE 00	SHEET NO C 4032

HYDRAULIC SYSTEM FLOWSHEET CQ7 / CQ8A

DWG. NO. ELN 2169 | SHEET NO. C 4031

LOCAL ACCUMULATOR STATION Nº11
VESSEL TRIM Nº C 1427 EZ
PRECHARGE NITROGEN (O2 - FREE) AT 100 BARS
TYPICAL FOR 5 ACCUMULATORS AND 5 BACKUP BOTTLES

LOCAL ACCUMULATOR STATION Nº9
VESSEL TRIM Nº C1425 EZ
PRECHARGE NITROGEN (O2 FREE) AT 100 BARS
TYPICAL FOR 3 ACCUMULATORS AND 3 BACKUP BOTTLES

LOCAL ACCUMULATOR STATION Nº8
VESSEL TRIM Nº C1424 EZ
PRECHARGE NITROGEN (O2 FREE) AT 100 BARS
TYPICAL FOR 3 ACCUMULATORS AND 3 BACKUP BOTTLES

LOCAL ACCUMULATOR STATION Nº14
VESSEL TRIM Nº C1430 EZ
1 ACCUMULATOR ONLY

LOCAL ACCUMULATOR STATION Nº10
VESSEL TRIM Nº C1426 EZ
PRECHARGE NITROGEN (O2 - FREE) AT 100 BARS
TYPICAL FOR 5 ACCUMULATORS AND 5 BACKUP BOTTLES

LOCAL ACCUMULATOR STATION Nº6
VESSEL TRIM Nº C1422 EZ
PRECHARGE NITROGEN (O2-FREE) AT 100 BARS
TYPICAL FOR 3 ACCUMULATORS AND 3 BACKUP BOTTLES

(EZ) 3/4" OD

SEE DETAIL 5 CONTROL TYPE B ESDV-V8A-4
SEE DETAIL 5 CONTROL TYPE B ESDV-V28-4
SEE DETAIL 5 CONTROL TYPE B ESDV-V8C-4
SEE DETAIL 5 CONTROL TYPE B ESDV-V1C-1
SEE DETAIL 5 CONTROL TYPE B ESDV-V1C-3
SEE DETAIL 5 CONTROL TYPE B ESDV-V1C-2
SEE DETAIL 5 CONTROL TYPE B ESDV-V2C-2

TO/FROM CENTRAL HYDRAULIC UNIT CQ7 COS C4038

C1401 EZ 1/2 OD-HF SUPPLY
C1402 EB-2"-HF RETURN
C1402EB-2"OD HF
C1401EZ 1" OD-HF

SEE DETAIL 3 CONTROL TYPE C HV-V1A-3
SEE DETAIL 3 CONTROL TYPE C HV-V1B-3
SEE DETAIL 3 CONTROL TYPE C HV-V1C-3
SEE DETAIL 3 CONTROL TYPE C HV-V2C-2
SEE DETAIL 3 CONTROL TYPE C HV-V2C-1
SEE DETAIL 3 CONTROL TYPE C HV-V2B-2
SEE DETAIL 3 CONTROL TYPE C HV-V2B-1
SEE DETAIL 3 CONTROL TYPE C HC-V2A-2
SEE DETAIL 3 CONTROL TYPE C HC-V2A-1

EZ 1" OD-HF

SEE DETAIL 5 CONTROL TYPE 'B' ESDV-V2C-1
SEE DETAIL 5 CONTROL TYPE 'B' ESDV-V1C-4
SEE DETAIL 5 CONTROL TYPE 'B' ESDV-V1B-2
SEE DETAIL 5 CONTROL TYPE 'B' ESDV-V1B-3
SEE DETAIL 5 CONTROL TYPE 'B' ESDV-V1B-1

TO/FROM CENTRAL HYDRAULIC UNIT CQ7 COS C 4038

C1403EZ-1 1/2" OD HF SUPPLY
C1404EB-2"-HF RETURN

EZ 3/4" OD-HF
EZ 1" OD-HF

SEE DETAIL 3 CONTROL TYPE C HV-V1C-1
SEE DETAIL 3 CONTROL TYPE C HV-V1C-4
SEE DETAIL 3 CONTROL TYPE C HV-V1B-4
SEE DETAIL 3 CONTROL TYPE C HV-V1B-1

SEE DETAIL 6 CONTROL TYPE F HV-V2A-4
SEE DETAIL 6 CONTROL TYPE F HV-V2A-5
SEE DETAIL 6 CONTROL TYPE F HV-V2A-6
SEE DETAIL 6 CONTROL TYPE F HV-V2B-4
SEE DETAIL 6 CONTROL TYPE F HV-V2B-5
SEE DETAIL 6 CONTROL TYPE F HV-V2B-6
SEE DETAIL 6 CONTROL TYPE F HV-V2C-4
SEE DETAIL 6 CONTROL TYPE F HV-V2C-5
SEE DETAIL 6 CONTROL TYPE F HV-V2C-6

APPROVED FOR CONSTRUCTION

2 NON VISIT

NOTES
1, SYMBOLS USED ON THIS DRAWING ARE IN ACCORDANCE WITH BS 2917 "HYDRAULIC AND PNEUMATIC SYSTEMS" & ISO/R1219 STANDARD SPECIFICATIONS.
2, THIS DRAWING TO BE READ IN CONJUCTION WITH DWG. Nº C4032, C4033 & C4035
3, AIR BLEEDS TO BE LOCATE AT HIGH POINTS OF SYSTEM BY SITE
4 ◇ DENOTES FLOW RATE IN LITRES/MIN

NOTE
ALL VALVE TAG NOS INCLUDE THE PREFIX LETTER 'C' EG ESDV-CV2A-1

CUSTOMER APPROVAL
BY:
DATE 21.10.76

NO	BY	DATE	REVISIONS	DATE	APP.
6	JP	23.9.77	SEE REVISION LIST	8-9-77	
5	RB	22.9.76	SEE REVISION LIST A.F.C.	21/10	
4	DL	1-7-76	REDRAWN REISSUED ON PINK PRINT		

FAB. STDS. REQ'D. THIS SHT

ELF - NORGE
FRIGG FIELD
TREATMENT / COMPRESSION PLATFORM No.2
NORTH SEA JOB 1-40-E2 WD. 104-M.
McDERMOTT — HUDSON
LONDON — ENGLAND

	BY	DATE
APPROVED		
Mc DERMOTT — HUDSON		
DATE 21.10.76		
ENGINEERS APPROVAL		
PROJECT		21/10
STRUCTURAL		
PROCESS		
MECHANICAL		
ELECTRICAL		
INSTRUMENT		
P&M CHECK		
P&CW CHECK		

DRAWN BY	SCALE	DATE	DWG NO
D. LOWES	NONE	1ST JULY 1976	ELN 2169
DESIGNED BY		ZONE NO	SHEET NO
T. CURTIS		00	C 4031

HYDRAULIC SYSTEMS FLOWSHEET

DWG NO. ELN 2169 | SHEET NO. C 4029

CSP24
INVERTED LIGHT GAS SEAL AND LP VENT STACK

FROM CV16C STRIPPING COLUMN VENT COS C 4018
C 418EA-8"-V
FROM CV16B STRIPPING COLUMN VENT COS C 4017
C 416EA-8"-V
FROM CV16A STRIPPING COLUMN VENT COS C 4016
C 413EA-8"-V
FROM MOISTURE ANALYSERS MT-CV2A,B,C-1 & DT-CV2A,B,C-1 & AX CV1A,B,C-1 COS C4010
BY INSTRUMENTS
C 470EA-8"-V
LP VENT HEADER
SLOPE
FROM TURBINE GENERATOR GAS STARTER MOTORS COS C 4028
C 459EA-4"-V
C 462EA-4"-V
C 463EA-3"-V
C 451EA-6"-V
FUEL GAS FOR PURGING VIA LINE BS1EF-3"-FG COS C 4005
C 1705EA-2"-FG
LOCATE ADJACENT TO CSP 24
¾" LOW POINT DRAINS (TYP)
EF
EA
C 881-EF-2"FG
8"×12"
12"
CSP24
LG SP24-1
LC SP24-2
(VF)
2"
14"×18"
C 454BEA-2"-DR
TO PROCESS DRAINAGE SYSTEM SUB-HEADER C 1457EA-4"-DR COS C 4025

FROM CONDENSATE SEPARATOR CV14C PSV-V14C-2/3 & PCV-V14C-4 COS C 4018
C 418EA-3"-V
FROM CV17C GLYCOL SURGE TANK 2" BREATHER COS C 4018
C 436EA-2"-V
C 469 EA-8"-V
FROM CONDENSATE SEPARATOR CV14B PSV-V14B-2/3 & PCV-V14B-4 COS C 4017
C 415EA-3"-V
FROM CV17B GLYCOL SURGE TANK 2" BREATHER COS C 4017
C 435EA-2"-V
C 468EA-8"-V
FROM CONDENSATE SEPARATOR CV14A PSV-V14A-2/3 & PCV-V14A-4 COS C 4016
C 412EA-3"-V
FROM CV17A GLYCOL SURGE TANK 2" BREATHER COS C 4016
C 434EA-2"-V
C 467EA-8"-V
LP VENT HEADER
C 401EA-14"-V
C 401EA-14"-V
LP VENT HEADER

APPROVED FOR CONSTRUCTION

FROM CM3 PIG RECEIVER PSV-M3-2 & 2" VENT COS C 4012
C 404EA-2"-V
FROM CV5 OIL SKIMMER PSV-V5-4 VIA LINE C 473EA-6"-V COS C 4014
C 441 SEA-6"-V
FROM CV5 OIL SKIMMER PSV-V5-5 VIA LINE C 474EA-6"-V COS C 4014
C 409EA-8"-V
FROM CV33 CONDENSATE TANK PSV-33-5 COS C 4014
C 439EA-6"-V
C 465EA-6"-V
FROM CONDENSATE STORAGE CV38 PSV-V38-8 COS C 4015
FROM CE3 FUEL GAS HEAT EXCHANGER PSV CE3-1 & CE3-2 COS C 4012
C 481EA-3"-V
FROM COALESCER CV4A PSE-V4-10 COS C4013
C 406EA-2"-V
C 440EA-6"-V
FROM CONDENSATE STORAGE CV 38 PSV-V38-7 COS C 4015
C 409EA-8"-V
SLOPE
FROM MOISTURE ANALYSER MT-CM3-1 COS C4011
BY INSTRUMENTS
FROM MOISTURE ANALYSER MT-CM13-1(FUTURE) COS C4011
FROM CV4A COALESCER PSV-V4A-4/5 VIA C 475 EB-2"-V COS C4014
C 407EA-2"-V
C 476EA-4"-V
SLOPE
FROM CV6 FUEL GAS SCRUBBER PSV-V6-10/11 COS C 4012
C 402EA-3"-V
FROM CV5 OIL SKIMMER PCV-V5-8 COS C 4014
C 408EA-2"-V
FROM CV3 SURGE VESSEL PSV-V3-5/6 COS C 4013
C 405EA-6"-V
FROM GAS DEMISTERS VIA PSV'S-V18A,B & C-1 CV18 A,B & C COS C 4028
C 444EA-4"-V
FROM CQ3 GENERATOR FUEL MODULES COS C 4028
C 450EA-2"-V
FUTURE B.F CONN
C 401EA-14"-V
LP VENT HEADER
SLOPE
L.P. VENT HEADER
C 401EA-14"-V
C 480EA-2"-V
C 479EA-2"-V
FROM COALESCER CV4B PSE-V4-12 COS C4013
FROM COALESCER CV4B PSV-V4B-4/5 COS C4014
SLOPE
C 421EA-14"-V
SLOPE

LAH V7-4
LSH V7-4B
LG V7-1
LSH V7-4A
PI V7-1
CV7
LG V7-3
LC V7-2
LCV V7-2
2"x1"
FC
1" SAMPLE CONN
C 550EA-¾"-DR
C 558EA-2"-DR
C 558EA-2"-DR
TO PROCESS DRAINAGE SYSTEM SUB HDR C1457EA-4"DR COS C 4025

CV7
LP VENT SCRUBBER
CAPACITY 1·3×10⁶ CMD (46×10⁶CFD) MAX
SIZE 1829 ID x 3428 T-T (6'0 ID x 8'-0" T-T)
DESIGN: 4·46 BARS ABS (64 7PSIA) @ 100°C (212°F)
OPERATING: 1·01 BARS ABS (14·7 PSIA) @ 100°C (212°F)
VESSEL TRIM Nº C 420EA-V
INSULATION: 50mm (2") CALCIUM SILICATE - BOTTOM HALF ONLY.

NOTE ALL TAILPIPES SUBHEADERS & HEADERS TO SLOPE CONTINUOUSLY TO CV7 OR CSP 24 AS INDICATED

NOTE
ALL VALVE & INSTRUMENT TAG Nos INCLUDE THE PREFIX LETTER 'C' EG. PSV-CV3-5/6

FAB. STDS REQ'D THIS SHT	DESIGN	ELEC	INSTR	PIPING	STRUCT	NO	BY	DATE	REVISIONS	DATE	APP
						4	RB	29-8-77	SEE REVISION LIST	1-9-77	
						3	LS	24-2-77	SEE REVISION LIST.		
						2	LS	23-9-76	SEE REVISION LIST AFC	21/10	
						1	JP	12-8-76	ISSUED FOR CLIENT APPROVAL	29/9	
						0	JP	10-3-76	PRELIMINARY ISSUE.		

CUSTOMER APPROVAL BY DATE 21.10.76

APPROVED: Tom Parsons for McDERMOTT - HUDSON DATE 12 April 76

ENGINEERS APPROVAL	BY	DATE
PROJECT		28.4.76
STRUCTURAL		
PROCESS		14.12.76
MECHANICAL		14.4.76
ELECTRICAL		26.4.76
INSTRUMENT		26.4.76
SUB CHECK		
PROJ. CHECK		

ELF - NORGE
FRIGG FIELD
TREATMENT / COMPRESSION PLATFORM No.2
NORTH SEA JOB 1-40-E2 W.D. 104-M.
McDERMOTT — HUDSON
LONDON — ENGLAND

DRAWN BY	SCALE	DATE	DWG NO
J. PARKER	NONE	17 MARCH 76	ELN 2169
DESIGNED BY J HOLDING			SHEET NO C 4029

PIPING AND INSTRUMENT DIAGRAM L.P. VENT SYSTEM

DWG. NO. ELN 2169 | SHEET NO. C 4028

CV18A,B & C
TURBINE GAS DEMISTERS

CQ4
FIRE DETECTION E EXTINGUISHING SYSTEM (HALON TYPE)

CQ9
AIR CONDITIONING UNIT

CV44
AIR RECEIVER
915 I/D X 1675 T-T (3'-0" I/D X 5'-6" T-T)
DESIGN 185 PSIG/115°F (12.4 BARA/46°C)
VESSEL TRIM N° C1076EU

CQ3
GAS TURBINE GENERATOR PACKAGE
1·75 M.V.A EACH (3 OFF)

FROM FUEL GAS HEADER COS C4018-P

C874EA-4"-FG

FUEL GAS SUPPLY HEADER

C446EA-4"-V

TO LP VENT HEADER C401EA-14"-V COS C4029

C447EA-3"-V

C449EA-4"-V

C448EA-3"-V

C451EA-6"-V COS C4023

C450EA-3"-V

TO LP VENT SUB HEADER C451EA-6"-V COS C4023

INSTRUMENT INTERFACE ROOM

C856EA-3"-FG

C857EA-3"-FG

C858EA-3"-FG

CV18A

CV18B

CV18C

C860EA-12"-P

C861EA-1"-P

C862EA-12"-P

C863EA-1"-P

C864EA-12"-P

C865EA-1"-P

TO TURBINE SHUTDOWN

CQ-3
GENERATOR BUILDING

CQ4

CQ9

CABLING ROOM

C1004EK-1½"-IA

INSTRUMENT AIR FROM C1004EK-2"-IA COS C4034

C225EA-2"-P

TO CONDENSATE SLOPS HEADER COS C4015

C1651EK-3"-PW-I

POTABLE WATER FROM TP1 HEADER 1551EK-3"-PW COS ELN 2110-A416

FIXED POINT

C1303EU-3"-UW-I

FROM UTILITY WATER HEADER C1303EU-3"-UW-I COS C4020

C1304EU-1"-UW-I

C1655EK-1"-PW-I

TO CP15A&B COS C4014

TO COMPRESSION AREA

1" WORKSHOP

C1305EA-1"-DR

C1306EA-1"-DR

C1307EA-1"-DR

C1308EA-2"-DR

C549EA-2"-DR

TO PROCESS DRAINAGE SYSTEM C549EA-2"-DR COS C4025

C1534EA-6"-DR

C1535EA-6"-DR

C1536EA-6"-DR

TO DECK DRAINAGE SYSTEM SUB-HDR C1482EA-6"-DR COS C4026

C545EU-2"-V

TO ATMOS

CV44

C1507EU-1"-DR

TO DRAINAGE SYSTEMS COS C4026

C1062EU-1"-PA

PLANT AIR FROM C1051 EU-3"-PA COS C4034

C1063EU-1"-PA

C1064EU-2"-PA

C1061EU-2"-PA

C1066EU-1"-PA

C1071EU-1"-PA

C1070EU-1"-PA

C1069EU-1"-PA

C1068EU-1"-PA

C1067EU-1"-PA

TURBINE VENT INLET FIRE DAMPER

TURBINE VENT OUTLET FIRE DAMPER

GENERATOR COOLER DUCT

FILTER HOUSING

FUEL MODULE

GAS STARTER MOTORS

GEAR BOX

LUBE OIL RESEVOIR

AUXILIARY LUBE OIL PUMP

SUMP

DRAINS

TA-4

TA-5

TA-6

FROM FIRE DETECTION WITHIN CQ3

TO DECK

LOCATE OUTSIDE IN WELL VENTILATED AREA AWAY FROM PERSONNEL (TYPICAL)

HOLD FOR DETAILS OF AIR MOTOR DAMPERS & SOLENOID VALVE

C456EA-2"-V

C457EA-2"-V

C458EA-2"-V

C455EA-1"-DR

C1069EU-1"-PA

C1070EU-1"-PA

C1071EU-1"-PA

C1066EU-1"-PA

C1061EU-2"-PA

ZS V44-3 — POSITION ON AIR FAILURE

PSV V44-1

PSV V44-2

PSV V44-3

PSV V44-4

PSV V44-5

PSL V44-3

PI V44-1

PI V44-2

PI V44-4

PI V44-5

ZL V44-3A

ZL V44-3B

ZL V44-4A

ZL V44-4B

ZS V44-3

PAH

PS

5×7·87M³ STAND BY NITROGEN BOTTLES FOR PURGE FANS

9×7·87M³ STAND BY NITROGEN BOTTLES FOR AUX LUBE OIL PUMP

HOLDS
1. ON ALL INSTRUMENT TAG NUMBERS WITHIN PACKAGE CQ3

NOTE:-
ALL INSTRUMENT AND VALVE TAG N°S INCLUDE THE PREFIX LETTER 'C'
EG:- PSH-CV2A-1

APPROVED
FOR CONSTRUCTION

DESIGN	ELEC.	INSTR.	PIPING	STRUCT	NO.	BY	DATE	REVISIONS
					4	RBD	8-9-77	SEE REVISION LIST
					3	DL	24-2-77	SEE REVISION LIST
					2	RB	24-5-76	SEE REVISION LIST. AFC.
					1	JD	16-4-76	ISSUED FOR CLIENT APPROVAL
					0	JD	22-3-76	PRELIMINARY ISSUE

FAB. STDS. REQ'D. THIS SHT

CUSTOMER APPROVAL BY: DATE 21.10.76

ENGINEERS APPROVAL — DATE 23 April 76

ELF - NORGE
FRIGG FIELD
TREATMENT / COMPRESSION PLATFORM No.2
NORTH SEA JOB 1-40-E2 WD. 104-M.
McDERMOTT - HUDSON
LONDON - ENGLAND

DRAWN BY	SCALE	DATE	DWG NO.
J.W.DEAN	NONE	22ND MARCH '76	ELN 2169
DESIGNED BY J. HOLDING		ZONE N° 00	SHEET NO. C 4028

PIPING AND INSTRUMENT DIAGRAM
ELECTRICAL GENERATION SYSTEM

DWG. NO ELN 2168 | SHT. NO C4027

CV24

H.P. RELIEF SCRUBBER

CAPACITY 40x10⁶ SCMD (1412·4 x 10⁶ SCFD) MAX.
SIZE
DESIGN 59·29 BARS (845 PSIG) & -55°C (-66°F)
OPERATING MAX 55·77 BARS (794 PSIG) @ -10°C (50°F)
VESSEL TRIM N8 C3351ECX-P

FROM CSP-SC1 & PSV-M1-7 AT CM1 PIG RECEIVER C.O.S. C4005 — C348ECX-8"-R

FROM ESDV-B3 AT WET LP GAS FROM TP1 C171EF-26"-P C.O.S. C4007 — C342ECX-2"-R

SUB HEADER

FROM ESDV-B-6 AT 3/2" DRY GAS LINE C130EE-3/2"-P C.O.S. C4009 — C344ECX-2"-R

FROM ESDV-B-4 AT WET HP GAS FROM TP1 C174EF-24"-P C.O.S. C4007 — C343ECX-2"-R

FROM ESDV-M1-4 AT WET GAS TO/FROM TP1 C110EF-26"-P C.O.S. C4005 — C341ECX-2"-R

C305ECX-2"-R — FROM CM1 PIG RECEIVER C.O.S. C4005

FROM CSP-SC2 AT CM 2 PIG RECEIVER C.O.S. C4005 — C350ECX-8"-R

C306ECX-2"-R — FROM CM2 PIG RECEIVER C.O.S. C4005

FROM PSV-M2-7 AT CM2 PIG RECEIVER C.O.S. C4005 — C359ECX-2"R

C345ECX-8"-R

C357ECX-10"-R — SUB-HEADER

FROM ESDV-V1C-7 INLET GAS LINE C101EF-26"-P C.O.S. C4005 — C320ECX-2"-R

SUB HEADER

C319ECX-2"-R — FROM ESDV-M2-3 AT INLET GAS HEADER C112EF-20"-P C.O.S. C4006

C303ECX-2"-R — FROM ESDV-M1-3 AT WET GAS TO/FROM TP1 C111EF-26"-P C.O.S. C4005

C356ECX-8"-R

FROM PCV-V3-4 AT CV3 C337EB-10"-R C.O.S. C4013 — C346ECX-12"-R

FROM CV2A GLYCOL CONTACTOR C126EF-18"-P C.O.S. C4008 — C326ECX-2"-R

FROM FWKO CV1A SEPARATOR C.O.S. C4006 — C353ECX-12"-R SUB HEADER

FROM CV2B GLYCOL CONTACTOR C125EF-18"-P C.O.S. C4008 — C325ECX-2"-R

FROM FWKO CV1B SEPARATOR C.O.S. C4006 — C354ECX-12"-R SUB HEADER

FROM CV2C GLYCOL CONTACTOR C124EF-18"-P C.O.S. C4008 — C324ECX-2"-R

FROM FWKO CV1C SEPARATOR C.O.S. C4006 — C355ECX-12"-R SUB HEADER

C1701ECX-2"-FG

C301ECX-24"-R — H.P. RELIEF HEADER

PURGE GAS FROM FUEL GAS LINE C870EA-3"-FG C.O.S. C4016 — C1710EA-2"-FG

PCV V24-5 — FIC — FI V24-3 — ED — ECX

C352ECX-8"-R — FROM SCOTTISH SALES GAS METERING C.O.S C4010

10" SPARE CONNECTION FOR FUTURE CM4 & 5

FROM FUTURE COMPRESSION AREA — FLANGED 24" — SLOPE

C339ECX-24"-R — C50 — SLOPE

AUX — FSH V24-4B — FAH V24-4 — FSH V24-4 — PSE V24-4 — FE V24-4

FQI V24-1 — AUX FE V24-1B — AUX FE V24-1A — AUX FIT V24-1B — AUX FIT V24-1A — FE V24-1B — FE V24-1A — BF — BF

SLOPE — PI V24-3 — PY V24-3 — AUX — C — PT V24-3 — PSH V24-3 — AUX — PAH V24-3 — LAH V24-3 — LSH V24-4B — LSH V24-3 — PI V24-3 — PI V24-1 — LSH V24-3A — LSH V24-3 — AUX — SLOPE

CV24

C340ECX-24"-R — SLOPE — C50 — LSH V24-4A — LC V24-3 — LG V24-5 — G — G — C50 — SLOPE

LSL V24-4A — LG V24-4 — 3/4" — DRAIN — ECX EA — CSP 26 — T — LSL V24-4B — LAL V24-4 — AUX — LSL V24-7 — LG V24-7 — LC V24-1 — EF ECX — C366EF-3/4"-R — DRAIN FUTURE METHANOL INJECTION

C218ECX-3"-P — C216ECX-3"-P — ECX EA

TO PROCESS DRAIN SYSTEM SUB-HDR C145TEA-4"-DR C.O.S. C4025

20"x24" REDUCER ENDS TO SUIT EC(20) & ECX(24) — 20"-300# RF WN. TO MATCH EC. TPI SPEC — LCV V24-2 — 3" — FC — 3" — LCV V24-1 — 1½" — 3" — FC — 3"

C340ECX-24"-R — ANCHOR — BRIDGE — ANCHOR — FIXED POINT C340ECX TYP2 — 38TEC (TP1) — VENT — VENT — CSP 26B — T — T — CSP 26 — 2" — 2" — 2" — 2" — ECX EA — EQ EA — C1501EA-2"-DR — C1501EA-2"-DR

TO PROCESS DRAIN SYSTEM SUB-HDR HOLD C.O.S. C4025 — TO PROCESS DRAIN SYSTEM SUB-HDR HOLD C.O.S. C4025 — TO TP1 H.P RELIEF HOLD LINE No C0541PRO-A19 — C534EA-3"-DR — TO PROCESS DRAIN SYSTEM SUB-HDR C1457 EA-4"-DR C.O.S. C4025 — TO PROCESS DRAIN SYSTEM SUB-HDR C1457 EA-4"-DR C.O.S. C4025

AUX — LSL V24-9B — LAL V24-9 — LCV V24-9 — 3" — 1½" — EA — ECX

FROM PSV-V1-2 AT L.P. GAS TO COMPRESSORS C172EF-26"-P C.O.S C4007 — C335ECX-2"-R

FROM ESDV-V2-1 AT H.P GAS FROM COMPRESSORS C173EF-24"-P C.O.S. C4007 — C336ECX-2"-R

FROM ESDV-V2C-6 AT DRY GAS TO/FROM T.P.1 C150EE-32"-P C.O.S. C4010 — C328ECX-2"-R

FROM ESDV-V2C-7 AT SCOTTISH SALE GAS HDR. C151EE-32"-P C.O.S C4010 — C329ECX-2"-R

FROM PSV-V2A-8 AT SCOTTISH SALES GAS HDR C191EE-32"-P C.O.S. C4011 — C331ECX-6"-R

FROM PSV-V2A-9 AT SCOTTISH SALES GAS HDR C191EE-32"-P C.O.S. C4011 — C332ECX-8"-R

FROM PSV-V2A-10 AT SCOTTISH SALES GAS HDR C191EE-32"-P C.O.S. C4011 — C333ECX-8"-R

FROM PSV-V2A-11 AT SCOTTISH SALES GAS HDR C191EE-32"-P C.O.S C4011 — C334ECX-8"-R

FROM CM3 SCOTTISH PIG LAUNCHER C.O.S C4011 — C350ECX-2"-R

H.P RELIEF HEADER — C301ECX-24"-R

SPARE 2" CONNECTION FOR FUTURE CM3 PIG LAUNCHER

NOTES:-
1. ALL LINES TO SLOPE TOWARDS CV24 PREFERRED 1/4" PER FOOT MIN SLOPE WHEREVER POSSIBLE.
2. HOLD FOR TIE-IN TO FUTURE COMPRESSION FACILITY.

NOTE:- ALL INSTRUMENT AND VALVE TAG NUMBERS INCLUDE THE PREFIX LETTER 'C' EG. PSH-CV2A-1

APPROVED FOR CONSTRUCTION

REVISIONS	DATE	APP.
6 L.S. 22/9/77 SEE REVISION LIST		
5 D.L. 23-2-77 SEE REVISION LIST	8-7-77	BC
4 J.L. 29.9.76 SEE REVISION LIST	21/10	JH
3 J.D. 9-4-76 SEE REVISION LIST	28/4	MH
2 J.G.Y. 28.11.75 APPROVED FOR CONSTRUCTION	5/12	MH
1 B.W. 29.10.75 ISSUED FOR CLIENT APPROVAL	3/11/75	MH
0 B.W. 25.8.75 PRELIMINARY		

FAB. STDS. REQ'D. THIS SHT

ELF-NORGE
FRIGG FIELD
TREATMENT/COMPRESSION PLATFORM No.2
NORTH SEA JOB 1-40-E2 W.D. 104-M.
McDERMOTT — HUDSON
LONDON — ENGLAND

APPROVED: Tony Dawson — McDERMOTT — HUDSON — DATE Mar. 4, 1977 — ENGINEERS APPROVAL

	BY	DATE
PROJECT	MH	2/12/75
STRUCTURAL		
PROCESS	MH	28/10/75
MECHANICAL		
ELECTRICAL		31/10/75
INSTRUMENT	MH	28/10/75
E&E CHECK		
PROJ. CHECK		

DRAWN BY B.W. WALKER | SCALE NONE | DATE 7th JULY '75 | DWG NO ELN 2169
CHECKED BY J. HOLDING | ZONE 00 | SHEET NO C4027
PIPING AND INSTRUMENT DIAGRAM H.P. RELIEF SYSTEM

DWG. NO. ELN 2169 | SHEET NO. C4026

UPPER DECK DRAINS

MAIN DECK DRAINS

MODULES 04 03 02 — MODULE 01 — C428EA-3"-V — C1495EA-8"-DR — C1497EA-8"-DR — C1496EA-6"-DR — RISER — C1499EA-8"-DR — SUB-HEADER — SLOPE — RP

MODULES 04 04 03 02 — MODULE 01 — C1536EA-6"-DR — C1537EA-6"-DR — C1498EA-8"-DR — C1529EA-8"-DR — C1499EA-8"-DR — 6x8

MODULES 03 04 — MODULES 02 01 — MODULES 03 04 — MODULES 02 01 — C429EA-3.5"-V — C1523EA-6"-DR — C1494EA-8"-DR — C1493EA-8"-DR — C1492EA-8"-DR — C1491EA-8"-DR — C1490EA-8"-DR — C1466EA-12"-DR

MODULES 02 01 — MODULE 03 — C1488EA-8"-DR — C1487EA-8"-DR — C1518EA-6"-DR

MODULES 03 04 — MODULES 02 01 — C1486EA-8"-DR — C1484EA-6"-DR — C1485EA-8-DR — C1484EA-8"-DR

C1484EA-8"-DR

STEEL DECK AREA — STEEL DECK AREA — PANCAKE 08 — DECK DRAINS FROM CQ3 COS C4028 — DRAINAGE FROM A/C ROOM PANCAKE 09 — PANCAKE 09

C1539EA-6"-DR — C1480EA-6"-DR — C1535EA-6"-DR — C1534EA-6"-DR — C1536EA-6"-DR — C1482EA-6"-DR — C1481EA-6"-DR — C1483EA-6"-DR — C1485EA-2"-DR — C1478EA-8"-DR — SUB-HEADER — SLOPE — RP

CELLAR DECK DRAINS

PANCAKE 05 — PANCAKE 06 — STEEL DECK AREA — PANCAKE 07

C1535EA-6"-DR — C1520EA-6"-DR — C1471EA-6"-DR — C1472EA-6"-DR — C1473EA-6"-DR — C1521EA-6"-DR — C1474EA-6"-DR — DRAINAGE FROM P15 A&B COS C4014 — C1480EA-2-DR — C1475EA-6"-DR — C1476EA-6"-DR — C1470EA-8"-DR — C1477EA-6"-DR — C1479EA-6"-DR — C1522EA-6"-DR — C1469EA-8"-DR — RISER — 8"x12" — C1466EA-12"-DR

LOCATE AT CV5 — LI V13-1 — PI P3-1 — 27A — TO CONDENSATE SLOPS HEADER COS. C4015 — C201EA-2"-P — VENT OVERBOARD C410EA-2"-V — 2"SAMP. CONN. — CELLAR DECK — CP3 — CV13 — McDH — K TECHNIP — C1538EA-10"-DR — FROM FUTURE PROCESS DRAINAGE (K TECHNIP) — C1531EA-6"-DR — SEAL LOOP — FROM FUTURE DECK DRAINAGE (K TECHNIP) — C1466EA-12"-DR — SEAL LOOP — 6x4" C1463EA-4"-DR — GENERAL PROCESS DRAINS COS C4025 — C1464EA-6"-DR — GENERAL PROCESS DRAINS C.O.S. C4025 — PUMP INTAKE TOP 1'-2" — 3.4m

HOLDS
1/ DRAINAGE FROM CV44 (COS C 4028)
3/ DRAINAGE BY BROWN & ROOT FROM PANCAKES 64 & 67 & FROM TEMPORARY HELIDECK.
4/ DRAINAGE FROM A/C ROOM.

APPROVED FOR CONSTRUCTION

2 NOV 1977

NOTES
1/ ALL HEADERS AND SUB-HEADERS TO HAVE FALL OF 1IN50 MINIMUM. UNLESS OTHERWISE INDICATED.
2/ TEES AND BLIND FLANGES SHOULD BE PLACED AT VARIOUS LOCATIONS FOR TIE IN TO FUTURE DRAINAGE

CP 3
WASTE OIL SUMP PUMP
95 C/MIN AT 57 BARS ΔP
25 USGPM AT 83 PSI ΔP

CV13
SUMP CAISSON
0·813M (32") DIA
VESSEL TRIM No C213EA-P

NOTE: ALL INSTRUMENT AND VALVE TAG NUMBERS INCLUDE THE PREFIX LETTER 'C'. EG. PSH - CV2A - 1

FAB. STDS. REQ'D. THIS SHT

DESIGN	ELEC	INSTR	PIPING	STRUCT	NO	BY	DATE	REVISIONS	DATE	APP.
					7	LS	18/8/77	SEE REVISION LIST		
					6	LS	24-2-77	SEE REVISION LIST		
					5	DL	9-11-76	SEE REVISION LIST		
					4	LS	23-7-76	SEE REVISION LIST		
					3	DL	9-4-76	SEE REVISION LIST	28/4	
					2	JGY	29-11-75	APPROVED FOR CONSTRUCTION	8/12	
					1	SAW	29-10-75	ISSUED FOR CLIENT APPROVAL	5/11	
					0	GM	23-9-75	PRELIMINARY.		

CUSTOMER APPROVAL — DATE 05.12.75

ENGINEERS APPROVAL — APPROVED: Tom Duncan — IN BEHALF OF McDERMOTT — DATE 4 NOV 1977

	BY	DATE
PROJECT		
STRUCTURAL		
PROCESS		
MECHANICAL		
ELECTRICAL		
INSTRUMENT		
TAB. CHKD.		
PROJ. CHKD.		

ELF - NORGE
FRIGG FIELD
TREATMENT / COMPRESSION PLATFORM No.2
NORTH SEA — JOB 1-40-E2 — WD. 104-M.
McDERMOTT — HUDSON
LONDON — ENGLAND

DRAWN BY G MEAGER — SCALE NONE — DATE 11TH AUG 75 — DWG NO ELN 2169
DESIGNED BY AB WORSFOLD — ZONE/M 00 — SHEET NO C4026
PIPING AND INSTRUMENT DIAGRAM DECK DRAINAGE SYSTEM

DWG. NO. ELN 2169 | SHEET NO. C4025

CQ13
SEWAGE TREATMENT PLANT

VENT OVERBOARD AWAY FROM AIR INLETS C444EU-3"-[illegible]-V

FROM T.C.P.2 TOILETS — C1503EU-4"-DR

CQ13

C1515EU-1½-DR

C1502EU-2"-DR

TREATED SEWAGE OVERBOARD

DRAINAGE FROM CV2C COS. C4008 — C513BEA-4"-DR

DRAINAGE FROM CV2B COS. C4008 — C511EA-4"-DR

DRAINAGE FROM CV2A COS. C4008 — C515EA-4"-DR

C1452EA-4"-DR SUB-HEADER SLOPE

C1452EA-4"-DR SUB-HEADER

DRAINAGE FROM CV5 COS. C4014 — C529EA-3"-DR, C528EA-2"-DR, C527EA-2"-DR

DRAINAGE FROM CV4A&B COS. C4014 — C526EA-2"-DR, C540EA-2"-DR

DRAINAGE FROM CM2 COS. C4005 — C523EA-2"-DR

DRAINAGE FROM CV33 COS C4014 — C1524EA-4"-DR

DRAINAGE FROM CM1 COS C4005 — C502EA-2"-DR

DRAINAGE FROM C340ECX-24"-R VIA CSP26&27 COS 4027 — C1500-2"-DR, 4"×2"

C1537EA-4"-DR

6"×4" SLOPE 6"×4" SUB-HEADER C1451EA-4"-DR

C1453EA-6"-DR SUB-HEADER

DRAINAGE FROM CV11B COS C4020 — C547EA-2"-DR, 12" SEAL

DRAINAGE FROM CV6 COS. C4012 — C523EA-2"-DR

DRAINAGE FROM CV11A COS. C4020 — C546EA-2"-DR, 12" SEAL

C1454EA-4"-DR SUB-HEADER

C1466EA-6"-DR

TO SUMP CAISSON CV13 VIA C1468EA-12"DR C.O.S. C4026

DRAINAGE FROM CV23 COS. C4012 — C532EA-4"-DR, C1532EA-4"-DR, C1533EA-4"-DR

DRAINAGE FROM CV24 COS. C4027 — C534EA-3"-DR, C535EA-3"-DR

C1456EA-4"-DR SUB HEADER SLOPE

C1457EA-4"-DR SUB-HEADER

DRAINAGE FROM CV9 COS. C4017 — C536EA-4"-DR, C533EA-4"-DR, C537EA-4"-DR

DRAINAGE FROM CV10 COS. C4020 — C1465EA-4"-DR, C1466EA-4"-DR, C1467EA-4"-DR

C1458EA-4"-DR SLOPE SUB-HEADER

C1459EA-4"-DR SLOPE SUB-HEADER

C1457EA-4"-DR SLOPE SUB HEADER

DRAINAGE FROM CSP 24 COS C4029 — C1548EA-2"-DR

DRAINAGE FROM CV7 COS. C4029 — C539EA-2"-DR

SLOPE SUB-HEADER

C1463EA-4"-DR RISER

DRAINAGE FROM CVIC COS. C4006 — C508EA-4"-DR, C509EA-4"-DR, C512EA-¾"-DR

DRAINAGE FROM CVIB COS. C4006 — C507EA-4"-DR, C511EA-¾"-DR

C509EA-4"-DR

SLOPE

DRAINAGE FROM CVIA COS. C4006 — C525EA-4"-DR, C510EA-¾"-DR

DRAINAGE FROM CV3 COS. C4013 — C530EA-4"-DR, C524EA-4"-DR

DRAINAGE FROM CM9 COS C4012 — C522EA-2"-DR

DRAINAGE FROM CM3 COS C4011 — C519EA-4"-DR

DRAINAGE FROM CM13 (FUTURE) COS C4011 — HOLD, 4" CONN

C1461EA-4"-DR SUB HEADER

SUB-HEADER C507EA-4"-DR SLOPE

C1463EA-4"-DR RISER

DRAINAGE FROM CVIA COS. C4006 — C504EA-4"-DR

DRAINAGE FROM CVIB COS. C4006 — C506EA-4"-DR

DRAINAGE FROM CQ3 COS 4028 — C549EA-2"-DR

SUB-HEADER C504EA-4"-DR SLOPE

C549EA-2"-DR

TO SUMP CAISSON CV13 VIA C1464EA-6"-DR C.O.S. C4026

HOLDS
1) CM5 (FUTURE)
2) CM4 (FUTURE)

NOTES
1. ALL HEADERS TO HAVE FALL OF 1 IN 50 MINIMUM. UNLESS OTHERWISE STATED.

NOTE:
ALL INSTRUMENTS AND VALVE TAG NOS INCLUDE THE PREFIX LETTER 'C' EG. PSH-CV2A-1

APPROVED FOR CONSTRUCTION
2 NOV 1977

FAB. STDS. REQ'D. THIS SHT.

DESIGN	ELEC.	INSTR.	PIPING	STRUCT.	NO.	BY	DATE	REVISIONS	DATE	APP.
					7	RB	18-8-77	SEE REVISION LIST		
					6	DL	22-2-77	SEE REVISION LIST		
					5	DL	18-11-76	SEE REVISION LIST		
					4	JS	21-9-76	SEE REVISION LIST		

DESIGN	ELEC.	INSTR.	PIPING	STRUCT.	NO.	BY	DATE	REVISIONS	DATE	APP.
					3	DL	9.4.76	SEE REVISION LIST	29/4	
					2	JGY	28-11-75	APPROVED FOR CONSTRUCTION	5/12	
					1	JGY	28-10-75	ISSUED FOR CLIENT APPROVAL	8/11/75	
					0	GM	15-9-75	PRELIMINARY.		

CUSTOMER APPROVAL
9.12.75

APPROVED for McDERMOTT — HUDSON
DATE Nov 4 1977
ENGINEERS APPROVAL

	BY	DATE
PROJECT		5/11/75
STRUCTURAL		
PROCESS	SEM	27.9.77
MECHANICAL	SCHUTZ	
ELECTRICAL	SUTCLIFFE	
INSTRUMENT	RCH	29/9/77
SUB. CHECK		
WORK CHECK		

ELF-NORGE
FRIGG FIELD

TREATMENT/COMPRESSION PLATFORM No.2
NORTH SEA JOB 1-40-E2 W.D. 104-M.

McDERMOTT — HUDSON
LONDON — ENGLAND

DRAWN BY	SCALE	DATE	DWG NO
G MEAGER	NONE	7TH AUG '75	ELN 2169
DESIGNED BY		ZONE No	SHEET NO.
A.B. WORSFOLD		00	C4025

PIPING AND INSTRUMENT DIAGRAM PROCESS DRAINAGE SYSTEM

A

DWG. NO. ELN 2169 | SHEET NO. C4021

CP7
WASHDOWN PUMP
1892 l/m AT 9.63 BARS ABS
(500 U.S. GPM AT 125 PSIG)
AT PUMP HEAD

CP6A & B
FIREWATER PUMPS
7570 l/m AT 9.63 BARS ABS
(2000 U.S. GPM AT 125 PSIG)
AT PUMP HEAD.

CQ12A&B
FIREWATER PUMP HOUSE VENTILATION PRESSURISATION PACKAGES

T.P.1 FIREWATER PUMP PNEUMATIC START RELAY PANEL

T.P.1 FIREWATER PUMP CONTROL PANEL C.O.S. ELN2110 A&B

QUARTERS PLATFORM CONTROL ROOM
START ONLY

Q.P. FIREWATER PUMP CONTROL PANEL C.O.S. ELN2111 B&D2

FIRE ALARM BUTTONS ONE AT EACH FIRE MONITOR & AT STRATEGIC PLACES

ESD CABINET FIREWATER PUMP START SYSTEM

FIRE PUMP START PNEUMATIC RELAY PANEL

INDIVIDUAL PNEUMATIC INPUTS FROM DELUGE SYSTEM C.O.S. C4036 & C4037 & C4038

VOL TANK

C1301EL-6"-UW

TO WASHDOWN WATER RINGMAIN C1302EL-4"-UW C.O.S. C4036

TO FIREWATER RINGMAIN C1189EL-12"-FW C.O.S. C4037

TO FIREWATER RINGMAIN C1105EL-12"-FW C.O.S. C4036

C1102EL-10"-FW

C1101EL-10"-FW

C1104EL-10"-FW

C1103EL-10"-FW

TRAP

OPEN DUMP TO SEA

TO ATMOS

C422EA-12"-V

C423EA-12"-V

CQ12A

CQ12B

TO/FROM DIESEL DAY TANK CV11A C.O.S. C4020

TO/FROM DIESEL DAY TANK CV11B C.O.S. C4020

C922EA-1"-DO

C923EA-1"-DO

C927EA-¾"-DO

C928EA-¾"-DO

PANEL

BATTERY CHARGER

BATTERIES

DIESEL

AIR START SYSTEM

COMBUSTION AIR C426EA-10"-V

COMBUSTION AIR C427EA-10"-V

REMOTE SWITCH - ONE AT EACH HOSEREEL.

100.008 M DL

LAT. 72.760 M. DL

EL: 60.500M DL

EL. 58.551 M DL

C540EL-2"-DR

C541EL-2"-DR

C471EU-3"-V

C472EU-3"-V

BIRD SCREEN

LOCATED INSIDE FIRE PUMP HSE.

LOCATED OUTSIDE FIRE PUMP HSE.

CP7

CP6A

CP6B

LOCATE CLOSE TO VESSEL

FROM PLANT AIR RINGMAIN C1060EU-3"-PA C.O.S. C4034

FROM PLANT AIR HEADER C1051EU-3"-PA C.O.S. C4034

C1051EU-1"-PA

C1058EU-1"-PA

VF

LOCATED INSIDE FIRE PUMPHOUSE

CV34A

CV34B

PSL - P6 - 9
PSL - P6 - 10
PSL - P6 - 18
PSL - P6 - 19
C.O.S. C4036

PSL - P6 - 7
PSL - P6 - 8
PSL - P6 - 14
C.O.S. C4037

PSL - P6 - 3
PSL - P6 - 6
PSL - P6 - 11
PSL - P6 - 12
C.O.S. C4038

NOTE:-
ALL INSTRUMENT AND VALVE TAG Nos INCLUDE THE PREFIX LETTER 'C'
EG P3H-CV2A-1

NOTE:
1) LOCATE OUTSIDE PUMP ROOM

APPROVED FOR CONSTRUCTION

FAB. STDS REQ'D THIS SHT.	DESIGN	STRUCT	PIPING	ELEC	MK	BY	DATE	REVISIONS	DATE	APP
					B	RB	22-8-77	SEE REVISION LIST	5-9-77	DL

DESIGN	STRUCT	PIPING	ELEC	MK	BY	DATE	REVISIONS	DATE	APP
				7	DL	22-2-77	SEE REVISION LIST		
				6	JD	23-9-76	SEE REVISION LIST		
				5	JD	19-4-76	SEE REVISION LIST		
				4	GM	8.10.75	SEE REVISION LIST		

DESIGN	STRUCT	PIPING	ELEC	MK	BY	DATE	REVISIONS	DATE	APP
				3	JSL	5-3-75	SEE REVISION LIST		
				2	JGY	2-12-74	APPROVED FOR CONSTRUCTION	2.12.74	
				1	CB	14/11/74	ISSUED FOR CLIENT APPROVAL		
				0		5th 10-74	PRELIMINARY		

CUSTOMER APPROVAL

ELF - NORGE
FRIGG FIELD
TREATMENT / COMPRESSION PLATFORM No.2
NORTH SEA JOB 1-40-E2 W.D. 104-M.
McDERMOTT - HUDSON
LONDON — ENGLAND

DRAWN BY	SCALE	DATE	DWG NO
M. WALLACE	NONE	3 OCT. 1974	ELN 2169
DESIGNED BY		REVISION	SHEET NO
A.B. WORSFOLD		00	C4021

UTILITY FLOWSHEET FIREWATER PUMPS

DWG NO. ELN 2169 | SHEET NO. C4020

CV 10
DIESEL STORAGE TANK
CAPACITY 100 M³ (26,412 US GALLS)
SIZE 7·3M(23-11")L x 3·5M(11-8")W x 4M(13-2")H
DESIGN 1·35 BARS ABS (5PSIG) @ 21°C (71°F)
OPERATING ATMOS. PRESS @ -9°C to +21°C (16°F to 71°F)
VESSEL TRIM No C9245A-DO

CP 8 A & B
DIESEL PUMPS
CAPACITY 113·6 ℓ/m AT 5·15 BARS ABS.
(30 USGPM AT 60 PSIG)

CV 21
DIESEL FILTER

CV 11 A&B
FIREWATER PUMPS DIESEL DAY TANKS
CAPACITY 1·62 m³ (428 USGALLS) EACH
VESSEL TRIM No C9226EA-DO
VESSEL TRIM No C9226EA-DO

CRANE CM7 — DAY TANK
CRANE CM8 — DAY TANK
C908EA-2"-DO
C911EA-2"-DO
FUTURE USERS COMPRESSION AREA
NOTE 1
C921 EA-2"-DO
NOTE SPARE
DIESEL OIL TO / FROM TPI COS ELN 2110 A414
FIXED POINT
BRIDGE
C903EA
851 EA (TPI)
CV21
C905 EA-2"-DO
C901EA-4"-DO
C902EA-4"-DO
C903EA-4"-DO
4"x2"
C905 EA-2"-DO
C908EA-2"-DO
VENT
C925EA-2"-V
CV11A
PART OF FIRE PUMP CP6A PACKAGE
C542EA-2"-DR
C543 EA-1"DR
C922EA-1"-DO
C927EA-¾"-DO
TO/FROM FIRE WATER PUMP CP6A COS A4021
C546 EA-2"-DR
TO PROCESS DRAINAGE SYSTEM SUB-HDR C1454EA-4"-DR COS C4025
C921EA-2"-DO
C909EA-2"-DO
CV11B
PART OF FIRE PUMP CP6B PACKAGE
C544 EA-2"-DR
C545 EA-1"-DR
C923EA-1"-DO
C928EA-¾"-DO
TO/FROM FIRE WATER PUMP CP6B COS A4021
C547 EA-2"-DR
TO PROCESS DRAINAGE SYSTEM SUB-HDR C1458EA-4"-DR COS C4025
UTILITY WATER TO ELECT. GEN. PACKAGE CP3 COS C4028
C1304EU-1"-UW-1
C1303EU-3"-UW-1
C1327EU-4"-UW-1
C1326EU-1"-UW-1
C1324EU-2"-UW-1
C1325EU-1"-UW-1
C1328EU-1"-UW-1
C1330EU-1"-UW-1
C1329EU-1"-UW-1
PANCAKE 06
C1303EU C1076EU
FIXED POINT
BRIDGE
UTILITY WATER FROM TP-1 HEADER 1076EU-3"-UW-1 COS ELN 2110-A414
C1343EU-1"-UW-1
C1342EU-1"-UW-1
C1341EU-1"-UW-1
MODULE 5
WORKSHOP
C1334EU-1"-UW-1
C1335EU-1"-UW-1
C1336EU-1"-UW-1
C1337EU-1"-UW-1
C1340EU-1"-UW-1
C1339EU-1"-UW-1
C1338EU-1"-UW-1
C1333EU-1"-UW-1
C1332EU-1"-UW-1
C1331EU-1"-UW-1
STEEL ELOCS 2 AREA
HP MUD FROM TP-1 COS 2110 A416
C 155150
C 155150-8"-M
BRIDGE
FIXED POINT
ZS WO-8
ZA WO-8
BY McDERMOTT HUDSON
BY OTHERS
B3/3 EO
B3/8 345 BARS
HP MUD TO DP2
C904EA-4"-DO
C906EA-4"-DO
VENT
C426EA-2"-V
VENT FILTER
PI VIO-2
PSV VIO-1
SEE NOTE 2
LT VIO-1B
LT VIO-1
LG VIO-2
LG VIO-3
LG VIO-4
CV IO
TI VIO-1
OVERFLOW
C1446EA-4"-DR
C1447EA-4"-DR
TO PROCESS DRAINAGE SYSTEM SUB-HDR C1455EA-4"-DR COS C4025
TO PROCESS DRAINAGE SYSTEM SUB-HDR C1459EA-4"-DR COS C4025
C919EA-2"-DO
C917EA-2"-DO
C918EA-2"-DO
C920EA-2"-DO
PI P8-1
PI P8-2
CP 8A
CP 8B
DRAIN POINT
SEE NOTE 4
LOADING STATION No 2
LOADING STATION No 1
BOAT LANDINGS
FROM TP-1 DIESEL PUMPS COS ELN 2110-A414
TCP-2 DIESEL OIL STORAGE PANEL No 2
TCP-2 DIESEL OIL STORAGE PANEL No 2 BY KVAERNER-TECHNIP
LT V11A-1
LAH V11A-1
LAL V11A-1
LG V11A2
SEE NOTE 2
LT V11B-1
LAH V11B-1
LAL V11B-1
LG V11B2
KLAXON
VA V11-1

UTILITY STATION	PLANT AIR	UTILITY WATER	LOCATION
CUS 1	C.1039EU-1"-PA	C.1326EU-1"-UW	PANCAKE 06
CUS 2	C.1075EU-1"-PA	C.1327EU-1"-UW	PANCAKE 06
CUS 3	C.1076EU-1"-PA	C.1328EU-1"-UW	PANCAKE 07
CUS 4	C.1077EU-1"-PA	C.1329EU-1"-UW	PANCAKE 07
CUS 5	C.1078EU-1"-PA	C.1330EU-1"-UW	PANCAKE 07
CUS 6	C.1079EU-1"-PA	C.1331EU-1"-UW	STL FLR AREA
CUS 7	C.1080EU-1"-PA	C.1332EU-1"-UW	STL FLR AREA
CUS 8	C.1081EU-1"-PA	C.1333EU-1"-UW	PANCAKE 05
CUS 9	C.1082EU-1"-PA	C.1334EU-1"-UW	MODULE 01
CUS 10	C.1083EU-1"-PA	C.1335EU-1"-UW	MODULE 02
CUS 11	C.1084EU-1"-PA	C.1336EU-1"-UW	MODULE 03
CUS 12	C.1085EU-1"-PA	C.1337EU-1"-UW	MODULE 03
CUS 13	C.1086EU-1"-PA	C.1338EU-1"-UW	MODULE 04
CUS 14	C.1087EU-1"-PA	C.1339EU-1"-UW	MODULE 01
CUS 15	C.1088EU-1"-PA	C.1340EU-1"-UW	MODULE 02
CUS 16	C.1089EU-1"-PA	C.1341EU-1"-UW	MODULE 03
CUS 17	C.1090EU-1"-PA	C.1342EU-1"-UW	MODULE 03
CUS 18	C.1091EU-1"-PA	C.1343EU-1"-UW	MODULE 04

SEE COS Nº C4034 FOR LOCATION OF PLANT AIR UTILITY STATIONS

APPROVED FOR CONSTRUCTION

NOTES :-
1. ALL FIRST BLOCK VALVES FROM EACH PLATFORM HEADER TO DIESEL USERS ARE TO BE LOCATED AS A VALVE MANIFOLD BY THEIR OWN PLATFORM LOCAL PANEL AND BY THEIR OWN PLATFORM DIESEL PUMP PUSH BUTTON
2. LOCATE ON DIESEL OIL STORAGE PANEL
3. THESE VALVES SHALL BE SPRING LOADED TO CLOSE & BE OPERABLE FROM OUTSIDE THE FIREWATER PUMP HOUSE
4. CHIKSAN FITTINGS TAGGED AS CSP 10D/1 & CSP 10D/2 SHALL BE FITTED TO LOADING STATIONS Nº1 & Nº2 RESPECTIVELY AT THE FLANGE ENDS. TEMPORARY CHIKSAN FITTINGS TAGGED AS CSP 10D/1 TEMP & CSP 10D/2 TEMP SHALL BE FITTED AS ABOVE FOR DIESEL LOADING DURING OFF SHORE HOOK-UP ONLY.

NOTE :-
ALL INSTRUMENT AND VALVE TAG Nºs INCLUDE THE PREFIX LETTER 'C' E.G. PSH-CV2A-1

FAB. STDS REQ'D. THIS SHT.

DESIGN	STRUCT	PIPING	ELEC	MK	BY	DATE	REVISIONS	DATE	APP
				8	LS	19/9/77	SEE REVISION LIST		
				7	DL	22·2·77	SEE REVISION LIST		
				6	JL	9·9·76	SEE REVISION LIST		
				5	JD	9·6·76	SEE REVISION LIST		
				4	JGV	8.7.75	SEE REVISION LIST		
				3	JB	5·3·75	SEE REVISION LIST		
				2	JJB	2·12·74	APPROVED FOR CONSTRUCTION	3·2·74	
				1	CB	11-11-74	ISSUED FOR CLIENT APPROVAL		
				0	CB	1.11.74	PRELIMINARY		

APPROVED
W. DERMOTT — HUDSON
DATE 2 DEC 74
ENGINEERS APPROVAL

	BY	DATE
PROJECT	DJ	11-11-74
STRUCTURAL		
PIPING		
MECHANICAL		
ELECTRICAL		
INSTRUMENT		
PUB. SPACE		
PROP. SPACE		

ELF - NORGE
FRIGG FIELD
TREATMENT / COMPRESSION PLATFORM No.2
NORTH SEA JOB 1-40-E2 WD. 104-M.
McDERMOTT - HUDSON
LONDON — ENGLAND

DRAWN BY	SCALE	DATE	DWG NO
WAKEHAM H.F.	NONE	31-OCT 74	ELN 2169
DESIGNED BY		ZONE No	SHEET NO
K.R. Wood		00	C4020

UTILITY FLOWSHEET
DIESEL OIL SYSTEM, & M.U.D. UTILITY WATER

DWG. NO ELN 2169 | SHEET NO. C4019

CQ5A&B
INSTRUMENT & UTILITY AIR COMPRESSOR PACKAGES

8·5 SCM/MIN AT 11·36 BARS ABS EACH
(300 SCFM AT 150 PSIG EACH
OPERATING DEWPOINT = -40°C (-40°F)

PAL Q5-10 — PSL Q5-10 AUX — AUX PSLL Q3-3 — PALL Q5-3

CV35A&B AIR INLET FILTERS
CP18A&B OIL LUBE PUMPS
CE6A&B INTERSTAGE AIR COOLERS
CC1A&B AIR COMPRESSORS
CV39A&B PULSATION DAMPENERS
CE5A&B AIR COOLERS
CP19A&B COOLING WATER PUMPS

CV36A&B AIR RECEIVERS
1·322 M I.D. x 2·134 M S/S EACH
(4'-4" I.D. x 7'-0" S/S EACH)
DESIGN: 12·38 BARS ABS (165 PSIG) @ 46°C (115°F)
OPERATING: 11·36 BARS ABS (150 PSIG) @ 46°C (115°F)

CV37A~D AIR DRIERS

KA Q5-9 — BIRD SCREEN — CSP 16C — C4328A-8"-V

COMBINED COMPRESSOR CONTROL PANEL (CONT BELOW)
INDIVIDUAL COMPRESSOR GAUGE PANEL
PI P1A-1 — TI E6A-1 — PI E6A-1 — TI E6A-2 — PI C1A-3

PV C1A-1 — PAL P18A-2 — PCV C1A-1 — PSL P18A-2 — FS C1A-1 — T — TCV E6A-3

CV35A — L.P. CYLINDER — CE6A — H.P. CYLINDER — CV39A

TO ATMOS PSV C1A-2 1½"x2" C.S.O. — PSV V39A-1 1"x2" C.S.O. — TI E5A-1

TAH E5A-6 — FAL C1A-1 — TSH E5A-6 — TAH E5A-4 — TSH E5A-4 — TI E5A-3 — TI E5A-4 — TI E5A-2

TO SKID DRAIN — COMPRESSOR CRANKSHAFT — WATER COOLING

CE5A — CP18A — CP19A — CC1A

TO/FROM COMPRESSOR LUBE SYSTEM

TO ATMOS PSV E5A-1 1"x2" C.S.O. — TO SKID DRAIN

3" — ½" — 3"

XA Q5-3 — BIRD SCREEN — CSP 16C — C4328A-8"-V

COMBINED COMPRESSOR CONTROL PANEL (CONT ABOVE)
INDIVIDUAL COMPRESSOR GAUGE PANEL
PI P1B-1 — TI E6B-1 — PI E6B-1 — TI E6B-2 — PI C1B-3

PY C1B-1 — PAL P18B-2 — PCV C1B-1 — PSL P18B-2 — FS C1B-1 — T — TCV E6B-3

CV35B — L.P. CYLINDER — CE6B — H.P. CYLINDER — CV39B

TO ATMOS PSV C1B-2 1½"x2" C.S.O. — PSV V39B-1 1"x2" C.S.O. — TI E5B-1

TAH E5B-6 — FAL C1B-1 — TSH E5B-6 — TAH E5B-4 — TSH E5B-4 — TI E5B-3 — TI E5B-4 — TI E5B-2

TO SKID DRAIN — COMPRESSOR CRANKSHAFT — WATER COOLING

CE5B — CP18B — CP19B — CC1B

TO/FROM COMPRESSOR LUBE SYSTEM

TO ATMOS PSV E5B-1 1"x2" C.S.O. — TO SKID DRAIN

3" — 3" — 3"

NOTE: ALL LOCAL BOARD MOUNTED INSTRUMENTS ARE LOCATED ON COMBINED COMPRESSOR CONTROL PANEL

TO ATMOS PSV V36A-2 1½"x2" C.S.O. — PI V36A-1 — CV36A — LG V36A-1 — TO SKID DRAIN
PSHL V36A-3 — PSHL V36B-3 — 3" — ½"
TO ATMOS PSV V36B-2 1½"x2" C.S.O. — PI V36B-1 — CV36B — LG V36B-1 — TO SKID DRAIN

CV41A MOISTURE PRE-FILTER — CV41B MOISTURE PRE-FILTER

TO ATMOS PSV V37A-6 — C.S.O. — PSV V37A-7 — DRIER CONTROL PANEL FOR CV37A&B
PV V37A-4 — PV V37B-4 — PSL V37A-2 — PDI V37B-2 — PV V37A-1 — PV V37B-1 — PI V37A-1 — PI V37B-1 — RO V37A-1 — PV V37A-3 — PI V37A-3
CV37A — TO ATMOS. — PI V37A-5 — PV V37A-5 — PY V37A-5 — PY V37A-8 — CV37B — RO V37A-2 — PV V37A-7 — CV43A DUST FILTER — PDI V43A-1
TO SKID DRAIN — 3" — MSH V37A-1

LOCATED ON COMPRESSOR CONTROL PANEL
TO ATMOS PSV V37C-6 — C.S.O. — PI V37-1 — PY V37C-4 — PV V37C-4 — PV V37D-4 — PY V37D-4 — PSL V37C-2 — PV V37C-3 — PV V37D-3 — PY V37C-3 — DRIER CONTROL PANEL FOR CV37C&D
PI V37C-1 — PV V37C-1 — PI V37D-1 — RO V37C-1 — CV37C — ATMOS. — PI V37C-5 — PV V37C-5 — PY V37C-5 — PY V37C-8 — CV37D — RO V37C-2 — PV V37C-7 — CV43B DUST FILTER — PDI V43B-1
TO SKID DRAIN — 3" — MSH V37C-1

PY V37D-5 — CSP 10J — 3" — 3" — EK — EU

PAL Q5-2 — PSL Q5-2 AUX — PI Q5-1 — PT Q5-2 — PCV Q5-8 — 3"x1½" — C1015EU-3"-PA — TO PLANT AIR HEADER COS. C4034

PAL Q5-4 — PSL Q5-4 AUX — PI Q5-3 — PT Q5-4 — PCV Q5-7 — PYX Q5-7 — PC Q5-7 — C1001EK-3"-TA — TO INSTRUMENT AIR HEADER COS C4034 — 3"x2" FO. 2x3 — PCV Q5-6 — PYX Q5-6 — PC Q5-6

SKID LIMIT

C5485A-8"-DR — TO DECK DRAINAGE SYSTEM SUB-HDRC14B3EA GT4 COS. C4026

NOTE: ALL INSTRUMENT AND VALVE TAG NO'S INCLUDE THE PREFIX LETTER 'C' EG. PSH-CV2A-1

APPROVED FOR CONSTRUCTION — 3 NOV 1975

CUSTOMER APPROVAL — 05.12.75

FAB. STDS. REQ'D. THIS SHT	DESIGN	ELEC.	INSTR.	PIPING	STRUCT.	NO.	BY	DATE	REVISIONS	DATE	APP.
						9	RB	19-8-77	SEE REVISION LIST	8-9-77	
						8	LS	22-2-77	SEE REVISION LIST		
						7	JL	23-9-76	SEE REVISION LIST	21/10	
						6	JD	2-12-76	SEE REVISION LIST	20/12	
						5	BW	29-11-75	RE-APPROVED FOR CONSTRUCTION	3/12	
						4	BW	18-9-75	RE-ISSUED FOR CLIENT APPROVAL	3/9	

APPROVED Tony Durrant — M. DIRECTOR — DATE Nov 4, 1975 — ENGINEERS APPROVAL

ELF - NORGE
FRIGG FIELD
TREATMENT / COMPRESSION PLATFORM No.2
NORTH SEA JOB 1-40-E2 WD. 104-M.
McDERMOTT - HUDSON
LONDON - ENGLAND

	BY	DATE
PROJECT		3/11
STRUCTURAL		
PIPING	MB	3-11-75
MECHANICAL	JDC	3-11-75
ELECTRICAL	MAC NO	3-11-75
INSTRUMENT	MH	3-11-75
TAG CHECK		
PROF. CHECK		

DRAWN BY B.V. WALKER — SCALE NONE — DATE 18TH SEPT '75 — DWG NO ELN 2169
DESIGNED BY A.B. NORSFOLD — ZONE NO 00 — SHEET NO C4019

PIPING AND INSTRUMENT DIAGRAM
INSTRUMENT AND UTILITY AIR COMPRESSOR PACKAGES

DWG NO. ELN 2169 | SHEET NO. C4018

CQ1C

GLYCOL REGENERATION UNIT

2·016 X 10⁶ KCAL/HR (8 X 10⁶ BTU/HR)

CE4C
REFLUX CONDENSER

CV16C
STRIPPING COLUMN

CH1C
GLYCOL REBOILER
INSUL:- CALCIUM SILICATE

CV14C
CONDENSATE SEPARATOR
INSUL: CALCIUM SILICATE

CV20C
CHARCOAL FILTER

CV15C
GLYCOL FILTER

CE1C 1&2
GLYCOL/GLYCOL EXCHANGERS
INSUL:- CALCIUM SILICATE

CV19E
PULSATION DAMPENERS
INSUL:- CALCIUM SILICATE

CV19F

CP10E

CP10F

CP10EF
GLYCOL PUMPS

CV17C
GLYCOL SURGE TANK
INSUL CALCIUM SILICATE

SKID Nº 1C

SKID Nº 3C

SKID Nº 2C

COLD FUEL GAS HEADER C856EG-4"-FG-II

FUEL GAS SUPPLY HEADER C867EA-4"-FG

COLD FUEL GAS HEADER C856EG-4"-FG-I

FUEL GAS SUPPLY HEADER C867EA-4"-FG

TO LP VENT SYSTEM HEADER C470EA-8"-V COS C4029

TO LP VENT SYSTEM SUB-HDR C469EA-8"-V COS C4029

TO LP VENT SYSTEM SUB HDR C469EA-8"-V COS C4029

COMMON MALFUNCTION ALARM

AUDIBLE ALARM

LOCAL CONTROL PANEL

STACK

PIPE TO VENT STACK

ZEUNER

2" PILOT

SAMPLE CONN

TO CV3B CONDENSATE RECYCLE TANK COS C4014

TO CONDENSATE STORAGE TANK CV3B COS C4015

TO CONDENSATE STORAGE TANK CV3B COS C4015

TO OIL SKIMMER CV3 COS C4014

TO SURGE TANK CV3 COS C4013

TO GAS TURBINE GENERATOR PACKAGE CQ3 COS C4028

TO CONDENSATE BURNERS CM17A&B COS C4015

TO LY-CV14C-3 FOR ESDV-V2C-2 COS C4008

TO/FROM GLYCOL CONTACTOR CV2C COS C4008

LEAN GLYCOL C551EF-3"-G-I

RICH GLYCOL C554EF-2"-G-I

GLYCOL SLOPS HDR C570EX-2"-G-II

GLYCOL FILL HEADER C582EX-4"-G

GLYCOL INJECTION HEADER C581EX-3"-G-I

GLYCOL DRAIN HEADER C572EX-4"-G

CONDENSATE SLOPS SUB HEADER C609EA-3"-P

ELECTRIC TRACE

DRAIN FOR ALL LEVEL INSTRUMENTS

FROM PSL-V1C-2 (COS C4007)
FROM PSL-V2C-27B (COS C4008)
FROM PSH-V2C-5 (COS C4010)

HEATING PAD AND ELECTRIC TRACING CONTROL FROM MCC.

NOTE:
ALL INSTRUMENT AND VALVE TAG NOS INCLUDE THE PREFIX LETTER 'C' E.G. PSV-CV2A-1.

APPROVED FOR CONSTRUCTION
- 8 NOV 1977

CUSTOMER APPROVAL

REVISIONS	DATE	APP.
7 WC 27-9-76 SEE REVISION LIST	21/10	
6 JP 2-4-76 SEE REVISION LIST	28/4	
5 BW 28-11-75 RE-APPROVED FOR CONSTRUCTION	5/12	
4 SAW 15.10.75 RE-ISSUED FOR CLIENT APPROVAL	5/11	
3 LS 8.8.77 SEE REVISION LIST		
2 LS 8.8.77 SEE REVISION LIST		
1 LS 22.2.77 SEE REVISION LIST		

FAB. STDS. REQ'D. THIS SHT.

ELF - NORGE
FRIGG FIELD

TREATMENT / COMPRESSION PLATFORM No.2
NORTH SEA JOB 1-40-E2 W.D. 104-M.

McDERMOTT — HUDSON
LONDON — ENGLAND

	BY	DATE
APPROVED: Tony Dawson		
for McDERMOTT — HUDSON		
DATE Nov. 4, 1975		
ENGINEERS APPROVAL		
PROJECT	PC	3/11
STRUCTURAL		
PROCESS	S.P.J	7.11.75
MECHANICAL	P.E.C	3.11.75
ELECTRICAL		
INSTRUMENT	RH	27.10.75
FAB. CHECK		
ERECTION CHECK		

DRAWN BY S.A. WOOLLEY | SCALE NONE | DATE 15TH OCT 75 | DWG NO ELN 2169
DESIGNED BY J. HOLDING | ZONE No 00 | SHEET NO C4018

PIPING AND INSTRUMENT DIAGRAM
GLYCOL REGENERATION UNIT

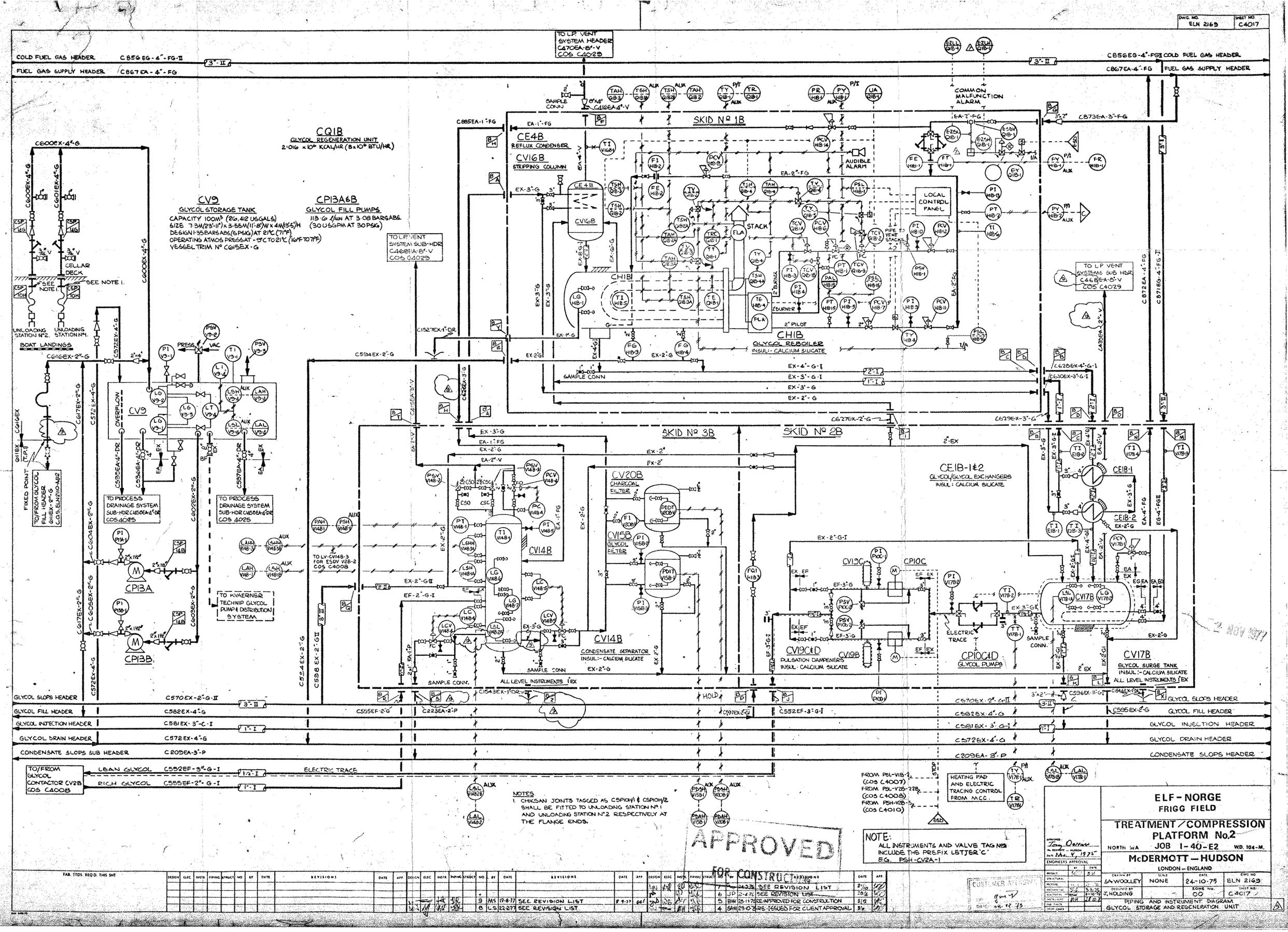
DWG. NO. ELN 2169
SHEET NO. C4017
COLD FUEL GAS HEADER C856EG-4"-FG-II
FUEL GAS SUPPLY HEADER C867EA-4"-FG
TO L.P. VENT SYSTEM HEADER C470EA-8"-V COS C4029
COMMON MALFUNCTION ALARM
SKID Nº 1B
CQ1B
GLYCOL REGENERATION UNIT
2·016 x 10⁶ KCAL/HR (8 x 10⁶ BTU/HR)
CE4B
REFLUX CONDENSER
CV16B
STRIPPING COLUMN
CV9
GLYCOL STORAGE TANK
CAPACITY 100M³ (26,412 USGALS)
SIZE 7·3M(23'-11") x 3·55M(11'-8")W x 4M(13'-5")H
DESIGN 1·35 BARS ABS (5 PSIG) AT 21°C (71°F)
OPERATING ATMOS PRESS AT -9°C TO 21°C (16°F TO 71°F)
VESSEL TRIM Nº C615EX-G
CP13A&B
GLYCOL FILL PUMPS
113·6 l/min AT 3·08 BARS ABS.
(30 USGPM AT 30 PSIG)
TO L.P. VENT SYSTEM SUB-HDR C468EA-8"-V COS C4029
CELLAR DECK
SEE NOTE 1.
UNLOADING STATION Nº2.
UNLOADING STATION Nº1.
BOAT LANDINGS
CHIB
GLYCOL REBOILER
INSUL:- CALCIUM SILICATE
LOCAL CONTROL PANEL
STACK
AUDIBLE ALARM
SAMPLE CONN
TO L.P. VENT SYSTEMS SUB HDR C468EA-8"-V COS C4029
SKID Nº 3B
SKID Nº 2B
CV20B
CHARCOAL FILTER
CV15B
GLYCOL FILTER
CV14B
CONDENSATE SEPARATOR
INSUL:- CALCIUM SILICATE
CE1B-1&2
GLYCOL/GLYCOL EXCHANGERS
INSUL: CALCIUM SILICATE
CV19C&D
PULSATION DAMPENERS
INSUL: CALCIUM SILICATE
CP10C&D
GLYCOL PUMPS
CV17B
GLYCOL SURGE TANK
INSUL:- CALCIUM SILICATE
ALL LEVEL INSTRUMENTS 1"EX
TO PROCESS DRAINAGE SYSTEM SUB-HDR C4058EA-4"-DR COS 4025
TO KVAERNER TECHNIP GLYCOL PUMP & DISTRIBUTION SYSTEM
TO LV-CV14B-3 FOR ESDV V28-2 COS C4008
FIXED POINT
TO/FROM GLYCOL FILL HEADER C611EX-2"-G C.O.S. ELN2110-A412
CP13A
CP13B
GLYCOL SLOPS HEADER C570EX-2"-G-II
GLYCOL FILL HEADER C582EX-4"-G
GLYCOL INJECTION HEADER C581EX-3"-C-I
GLYCOL DRAIN HEADER C572EX-4"-G
CONDENSATE SLOPS SUB HEADER C209EA-3"-P
TO/FROM GLYCOL CONTACTOR CV2B COS C4008
LEAN GLYCOL C552EF-3"-G-I
RICH GLYCOL C555EF-2"-G-I
ELECTRIC TRACE
HEATING PAD AND ELECTRIC TRACING CONTROL FROM MCC.
FROM PSL-V1B-2 (COS C4007)
FROM PSL-V2B-22B (COS C4008)
FROM PSH-V2B-5 (COS C4010)
NOTES
1. CHIKSAN JOINTS TAGGED AS CSP10H/1 & CSP10H/2 SHALL BE FITTED TO UNLOADING STATION Nº1 AND UNLOADING STATION Nº2 RESPECTIVELY AT THE FLANGE ENDS.
NOTE:
ALL INSTRUMENTS AND VALVE TAG Nºs INCLUDE THE PREFIX LETTER 'C'
EG. PSH-CV2A-1
APPROVED FOR CONSTRUCTION
ELF-NORGE
FRIGG FIELD
TREATMENT/COMPRESSION PLATFORM No.2
NORTH SEA JOB 1-40-E2 WD. 104-M.
McDERMOTT-HUDSON
LONDON-ENGLAND
DRAWN BY SA WOOLLEY
SCALE NONE
DATE 24-10-75
DWG NO ELN 2169
DESIGNED BY J. HOLDING
ZONE No. 00
SHEET NO. C4017
PIPING AND INSTRUMENT DIAGRAM
GLYCOL STORAGE AND REGENERATION UNIT
FAB. STDS. REQ'D. THIS SHT
REVISIONS
9 MS 19-8-77 SEE REVISION LIST
8 LS 22-2-77 SEE REVISION LIST
7 24-2-76 SEE REVISION LIST
6 JP 2-4-76 SEE REVISION LIST
5 BW 28-11-75 RE-APPROVED FOR CONSTRUCTION
4 SAW 23-10-75 RE-ISSUED FOR CLIENT APPROVAL
CUSTOMER APPROVAL

DWG NO ELN 2169 | SHEET NO C4016

CONTINUED FROM SHEET COS C4015

COLD FUEL GAS HEADER 3"-1 C856EG-4"-FG-1

TO LP VENT SYSTEM HEADER C4702EA-8"-V COS C4029

C413EA-8"-V

SAMPLE CONN. 2"DN 8"x4"

COLD FUEL GAS HEADER C856EG-4"-FG-1

FUEL GAS SUPPLY HEADER C807EA-4"-FG

COMMON MALFUNCTION ALARM

C870EA-3"-FG

C1706EA-2"-FG

PURGE GAS TO SUB-HEADER C3565EX-12"-2 VIA C1705EX-12"-2 COS C4027

TO LP VENT SYSTEM SUB-HDR C4677EA-8"-V COS C4029

CV31
GLYCOL CHARCOAL FILTER

CP14A & B
GLYCOL INJECTION PUMPS
3 765 - 227 L/HR (1-GOUS GPH)
@ 160 BARS (2320 PSI) ΔP

CQ1A
GLYCOL REGENERATION UNIT
2·016 X10⁶ KCAL/HR (8 X10⁶ BTU/HR)

CE4A
REFLUX CONDENSER

CV16A
STRIPPING COLUMN

SKID Nº 1A

AUDIBLE ALARM

LOCAL CONTROL PANEL

STACK

PIPE TO VENT STACK

CH1A
GLYCOL REBOILER
INSUL. CALCIUM SILICATE

2" PILOT

TO LP VENT SYSTEM SUB-HDR C4677EA-8"-V COS C4029

FROM INSTRUMENT AIR HEADER C1091EK-3"-1A COS C4034

TO RUNNING/STOP LIGHTS FOR PUMPS CP14A&B

C1006EK-1"-1A

RUNNING LIGHT

STOPPED LIGHT (VF)

CP14A

CP14B

C586EF-1½"-G-1

C585EX-3"-G-1

C587EF-1½"-G-1

C588EF-2"-G-1

C589EF-2"-G-1

TO LV-CV14A-3 FOR ESDV-V2A-2 COS C4008

SKID Nº 3A

CV14A
CONDENSATE SEPARATOR
INSUL. CALCIUM SILICATE

SAMPLE CONN

ALL LEVEL INSTRUMENTS

CV20A
CHARCOAL FILTER

CV15A
GLYCOL FILTER

SKID Nº 2A

CE1A1-#2
GLYCOL/GLYCOL EXCHANGERS
INSUL. CALCIUM SILICATE

CE1A-1

CE1A-2

CP10A

CV19A

CV19B

CP10B

CV19A&B
PULSATION DAMPENERS
INSUL. CALCIUM SILICATE

CP10A&B
GLYCOL PUMPS

ELECTRIC TRACE

CV17A
GLYCOL SURGE TANK
INSUL. CALCIUM SILICATE

ALL LEVEL INSTRUMENTS

CONTINUED FROM SHEET C4012

GLYCOL SLOPS HEADER C570EX-2"-G-1

GLYCOL INJECTION C556EF-2"-G-1

GLYCOL INJECTION HEADER C581EX-3"-G-1

GLYCOL DRAIN HEADER C572EX-4"-G

TO CONDENSATE SLOPS HEADER C2106A-4"-P COS C4014

CONDENSATE SLOPS SUB-HEADER C209EA-3"-P

TO/FROM GLYCOL CONTACTOR CV2A C.O.S. C4008

LEAN GLYCOL C553EF-3"-G-1 ELECTRIC TRACE

RICH GLYCOL C556EF-2"-G-1

C570EX-2"-G-1

C582EX-4"-G

C581EX-3"-G-1

C572EX-4"-G

C209EA-3"-P

GLYCOL FILL HEADER

GLYCOL INJECTION HEADER

GLYCOL DRAIN HEADER

CONDENSATE SLOPS SUB-HEADER

C1545EX-1"-DR GLYCOL SLOPS HEADER

FROM PSL-V1A-2 (COS C4007)
FROM PSL-V2A-2B (COS C4008)
FROM PSH-V2A-5 (COS C4010)

ESD

HEATING PAD AND ELECTRIC TRACE CONTROL FROM MCC

NOTE: ALL INSTRUMENTS AND VALVE TAG Nºs INCLUDE THE PREFIX LETTER C' EG PSH-CV2A-1

APPROVED FOR CONSTRUCTION

REVISIONS	DATE	APP.
9 RB 15-8-77 SEE REVISION LIST	9-9-77	DAK
8 LS 22-2-77 SEE REVISION LIST		
7 KS 24-3-76 SEE REVISION LIST		
6 JD 5-4-76 SEE REVISION LIST		
5 BW 28-11-75 RE-APPROVED FOR CONSTRUCTION		
4 JSL 20-10-75 RE-ISSUED FOR CLIENT APPROVAL		

ELF - NORGE
FRIGG FIELD

TREATMENT / COMPRESSION PLATFORM No.2
NORTH SEA JOB 1-40-E2 WD. 104-M.

McDERMOTT — HUDSON
LONDON — ENGLAND

APPROVED Tom Dawson
for DRAWN — ENGINEER
DATE Nov 4, 1975

ENGINEERS APPROVAL

	BY	DATE
PROJECT		5/11
STRUCTURAL		
PROCESS	AP-J	5-11-75
MECHANICAL	JDS	5-11-75
ELECTRICAL		24-10-75
INSTRUMENT	MH	31-10-75
SAFE. CONTR.		
PIPE STRESS		

DRAWN BY J.S. LOI | SCALE NONE | DATE 20TH OCT 75 | DWG NO ELN 2169
DESIGNED BY J. HOLDING | EDNS Nº 00 | SHEET NO C4016

PIPING AND INSTRUMENT DIAGRAM
GLYCOL REGENERATION UNIT & INJECTION PUMPS

DWG NO ELN 2169 | SHEET NO C4015

CP20
CONDENSATE STORAGE PUMP
331 ℓ/MIN. AT 30·67 BARS ABS HEAD
(87·5 US G/MIN. AT 444·7 PSIA HEAD)

CV38
CONDENSATE STORAGE TANKS (BY OTHERS)
7.0 M. I.D. X 40.0 M. HIGH
(23 FT. I.D. X 131·2 FT. HIGH)
CAP. 1500 M³ (396,178 USG) NOMINAL.
DESIGN 11·2 BARS ABS (163 PSIA) AT 50°C. (122°F) (INTERNAL)
OPERATING 127-1338 mmWG (5"WG-13 PSIG) AT 4-10°C (39-50°F)
VESSEL TRIM Nº: C254EA-P

CP21
OILY WATER PUMP
95 ℓ/MIN. AT 16·88 BARS ABS HEAD
(25 USG/MIN. AT 230 PSIG HEAD)

CP16A&B
WATER CURTAIN PUMPS
1892 ℓ/MIN @ 9·63 BARS ABS. EACH
(500 USG/MIN AT 125 PSIG EACH) AT PUMP HEAD.

CM17A&B
CONDENSATE BURNER BOOMS
CAPACITY 477 M³/DAY (3000 BOPD)

TO LP VENT SYSTEM SUB HEADER C466EA-16"-V COS C 4029

TO LP VENT SYSTEM SUB HEADER C466EA-16"-V COS C 4029

COLD FUEL GAS HEADER 3"-II C856EG-4"-FG-II

CONTINUED ON SHEET C 4016.

CONDENSATE FROM CP2A&B C198EB-3"-P

CONDENSATE BURNER SUPPLY HEADER

CONDENSATE SLOPS HEADER C210EA-4"-P

C225EA-2"-P

C201EA-2"-P

FROM GENERATOR DEMISTERS CV18-A&B&C COS C4020

FROM SUMP CAISSON CV13 COS C4026

TO/FROM CP2 A&B&C COS C4013

BLOWDOWN TUBE

FUEL GAS FROM FUEL GAS HEADER C867EA-4"-FG COS C4018

PAD GAS FROM FUEL GAS HEADER C867EA-4"-FG COS C4018

C888EA-4"-FG

DO NOT POCKET

TO LV-V38-4A COS C4014

TO LV-CV38-4 COS C4014

TO LV-V38-7A (SHUT IN CV33) COS C4014

C244EA-4"-P

SLOPE

C251EA-12"-P

C253EA-2"-P

C240EA-4"-P

C245EB-3"-P

C232EB-3"-P

C247EB-3"-P

C248EB-3"-P

C281EA

C249EA-3"-P

C891EA-4"-FG

C892EA-4"-FG

C898EA-4"-FG

C895EA-2"-P

C252EA-4"-P

C251EA-12"-P

C282EB-2"-P

STOP PUMP

ESD

TO LV-V38-7B (SHUT IN CV3) COS C 4014

TO LV-V38-7 (CLOSES LCV-V33-5) COS C4014

HIGH POINT

CP 20 SEE NOTE 1

11·3M DL 1ST IMP

CV 38 (SEE NOTE 2)

CP 21 SEE NOTE 1

6·1M DL 1ST IMP

CONDENSATE FROM CV35

CONDENSATE TO CV3

C245EB-3"-P

C240EB-3"-P

C NºI UNLOADING STATION

C Nº2 UNLOADING STATION

CSP 101

SEE NOTE 5

C1251EL-6"-SW

LOCATE AT CONDENSATE IGN. PANEL

CP16A

CP16B

100.008M D.L.

C1252EL-6"-SW

LAT 72.76M D.L. LAT

60.5M D.L.

C198EB-3"-P

HOLD

FUTURE OIL BURNER

CM17A

CONDENSATE IGNITION PANEL

LOCATE BY BURNER VALVE MANIFOLD

C866EA-2"-FG

FUEL GAS FROM SUPPLY HEADER COS C4018

HOLD

FUTURE OIL BURNER

CM17B

NOTES:—
1. PUMPS CP20, CP21 & CP15 SHALL HAVE MANUAL PUSHBUTTONS LOCATED AT CV38 LOCAL PANEL.
2. ALL LOCAL PANEL INSTRUMENTS ASSOCIATED WITH CV33 & CV38 SHALL BE LOCATED ON THE CV38 CONDENSATE STORAGE PANEL. ALARMS SHALL BE AUDIBLE & VISUAL.
3. LOCATE PCV-V38-1&2, PSV-V38-7&8 (13·12 FT) ABOVE TOP TAN LINE OF CV33.
4. LOCATE AT 84·55M DL PLATFORM.
5. CHIKSAN FITTINGS TAGGED AS CSP 101/1 & CSP 101/2 SHALL BE FITTED TO UNLOADING STATIONS Nº1 & 2 RESPECTIVELY AT THE FLANGE ENDS.

NOTE:
ALL INSTRUMENTS AND VALVE TAG Nºs INCLUDE THE LETTER PREFIX 'C' EG. PSH-CV2A-1.

APPROVED FOR CONSTRUCTION
2 NOV 1977

FAB. STDS. REQ'D. THIS SHT	DESIGN	ELEC	INSTR	PIPING	STRUCT	NO.	BY	DATE	REVISIONS	DATE	APP
						9	RB	12-8-77	SEE REVISION LIST		
						8	JD	21-2-77	SEE REVISION LIST		
						7	JA	23-9-76	SEE REVISION LIST	2/10	
						6	JP	3-6-76	SEE REVISION LIST	20/4	
						5	GM	20-11-75	APPROVED FOR CONSTRUCTION	5/12	
						4	GM	24-10-75	RE-ISSUED FOR CLIENT APPROVAL	31-	

DEP OPER APPROVAL
DATE 09-12-75

APPROVED Tony Owens
for McDERMOTT — HUDSON
DATE Nov 4 1975

ENGINEERS APPROVAL

	BY	DATE
PROJECT		5/11
STRUCTURAL		
PROCESS	MG	31-10-75
MECHANICAL	JA	3-11-75
ELECTRICAL	[illegible]	3-10-75
INSTRUMENT	MH	28.10.75
PUB. CHECK		
PROJ. CHIEF		

ELF-NORGE
FRIGG FIELD
TREATMENT/COMPRESSION PLATFORM No.2
NORTH SEA JOB 1-40-E2 WD. 104-M.
McDERMOTT — HUDSON
LONDON — ENGLAND

DRAWN BY	SCALE	DATE	DWG NO
G MEAGER	NONE	24,10,75	ELN 2169
DESIGNED BY	ZONE Nº		SHEET NO.
AB WORSFOLD		00	C 4015

PIPING & INSTRUMENT DIAGRAM
CONDENSATE STORAGE SYSTEM

DWG NO ELN 2169 | SHEET NO C 4014

CV4A&B
COALESCERS
M.I.D.X. M.T-T
FT.IDX FT T-T
DESIGN 22·98 BARS ABS (333·2 PSIA) AT 50C (122F)
OPERATING 18 BARS ABS (261 PSIA) AT 30-50C (86-122F)
VESSEL TRIM NO C 200 EB-P (CV4A)
VESSEL TRIM NO C 288 EB-P (CV4B)

CV33
CONDENSATE RECYCLE TANK
4·05M. ID X 4·15M. H (13·28FT. IDx 13·61 FT. H)
CAPACITY 53·46M³ (14120 U.S GALS)
DESIGN: 2·8 BARS ABS & 4 PSIG @ 50°C (122°F)
OPERATING -51 TO +1338 mmWG (-2WG TO +1·3 PSIG)
VESSEL TRIM N° C241EA-P

CP15A&B
CONDENSATE RECYCLE PUMPS
351 L/MIN AT 18·53 BARS ABS. HEAD
(89·5 USGPM AT 254 PSIG HEAD)

CP9A&B
SLOPS OIL PUMPS
37·9 C/MIN AT 18·94 BARS ΔP
(10 USGPM AT 274·6 PSIG)

CV30A&B
SLOPS OIL PULSATION DAMPENERS

CV5
OIL SKIMMER
SIZE 2·438 MIDX 7·925 M.T-T (96"IDx26'-0"T-T)
CAPACITY 3000 BOPD; 10.000 BWPD
DESIGN 4·48 BARS ABS (65 PSIA) AT 50°C (122°F)
OPERATION 2·86 BARS ABS. (35 PSIA) AT 50°C - 50°C (86°F-122°F)
VESSEL TRIM No C 211EA-P

TO LP VENT SYSTEM HEADER C401EA-14"-V COS C 4029

LOCATE AT SAFE LOCATION EL 7.0M ABOVE UPPER DECK

TO LP VENT SYSTEM SUB-HDR C406EA-12"-V COS C 4029

1" DRAIN

COLD FUEL GAS HEADER 3"-I C856EG-4"-FG-I

CONDENSATE

CONDENSATE FROM SURGE TANK CV3

CONDENSATE TO CP1A&B

CONDENSATE FROM CP1A&B C184 EB-3"-P

CONDENSATE TO CP2C

C407EA-2"-V

C186 EB-3"-P

C180EB-12"-P

C198EB-3"-P

C856EG-4"-FG-II 3"-II COLD FUEL GAS HEADER

C438EA-14"-V

C439EA-6"-V

C437EA-12"-V

CONDENSATE BURNER SUPPLY HEADER

FUEL GAS FROM HEADER C867EA-4"-FG COS C4018

C879EA-2"-FG

PAD GAS FROM FUEL GAS HEADER C867 EA-4"-FG COS C4018

C880EA-4"-FG

C880EA-2"-FG

TO LP VENT SYSTEM HEADER C401EA-14"-V COS C 4029

TO LP VENT SYSTEM LINE N° C401EA-8"-V COS C 4029

TO LP VENT SYSTEM HEADER C409EA-14"-V COS C 4029

C408EA-2"-V

C409EA-6"-V

C445EA-6"-V

C410EA-4"-P CONDENSATE SLOPS HEADER

DRAINS FROM COMPRESSOR K.O. POTS

C272EB-3"-P

C271EB-3"-P

C184 EB-3"-P

C479EA-2"-V SLOPE

C525EA-1"-DR

C192EB-2"-P

C1451EA-3/4"-DR

TO LP VENT HEADER C401EA-14"-V COS C4029

CV4A

CV33 (SEE NOTE 2)

CV5

C202EA-2"-P

C528EA-2"-DR

C527EA-2"-DR

C529EA-3"-DR

TO PROCESS DRAINAGE SYSTEM SUB HEADER C1451EA-4"-DR COS C4025

C269EB-3"-P

C478EB-2"-V

C1541EA-1"-DR

C273EB-2"-P

C192EB-2"-P

C526EA-2"-DR

C270EB-3"-P

CV4B

C234EA-4"-P

C1524 EA-4"-DR

C250EB-4"-P

C238EB-3"-P

C235EB-3"-P

C236EA-4"-P

C237EB-4"-P

CP15A (NOTE 1)

CP15B (NOTE 1)

C239EB-3"-P

C258EB-3"-P

C220EB-3"-P

C197EB-3"-P

C524EA-4"-DR

C257EB-3"-P

C257EB-4"-P

C205EB-4"-P

CP9A

CV30A

C204EB-2"-P

C196EB-2"-P

C205EA-2"-P

C206EB-2"-P

CV30B

CP9B

C207EB-2"-P

C196EB-4"-P

C209EA-3"-P

C2405A-4"-P

C232EB-3"-P

C194 EB-4"-P

C196 EB-2"-P

TO CONDENSATE STORAGE TANK CV3B

FROM CONDENSATE STORAGE TANK CV3B

CONDENSATE FROM CONDENSATE SEPARATORS CV1A,B,C COS C4016

TO CONDENSATE SURGE TANK CV3 C292 EB-3"-P

OILY WATER FROM CV3 C194 EB-4"-P

CONDENSATE TO CV3 C197 EB-3"-P

CONDENSATE TO CV3 C196 EB-2"-P

C1655EK-1"-PW-I

LUBE OIL FROM CP-15A

LUBE OIL TO CP-15A

LUBE OIL FROM CP15B

LUBE OIL TO CP-15B

TO PROCESS DRAINAGE SYSTEM SUB-HDR C1451EA-4"-DR COS C4025

TO PROCESS DRAINAGE SYSTEM SUB HEADER C1451EA-4"-DR COS C4025

POTABLE WATER FROM C1651EK-3"-PW-I COS C4028

C1810EA-2"-DR

TO DECK DRAINAGE (SUB-HEADER C1407-EA-8"-DR COS C4026

CP15A&B LUBE OIL COOLING SYSTEM

SEE DETAIL 'B' SHEET C4004

BRIDGE

FIXED POINT 214EB (TP-1)

CONDENSATE TO/FROM TP-1 C06ELN2110-A409

NOTE:
ALL INSTRUMENTS AND VALVE TAG N°s INCLUDE THE PREFIX LETTER 'C' E.G. PSH-CV2A-1

NOTES
1. SEE NOTE 1 ON SHEET C4015
2. CV 33 LOCAL PANEL INSTRUMENTS SHALLBE LOCATED ON CV3B CONDENSATE STORAGE PANEL SEE NOTE 2 ON C4015
3. ROCKWELL 3 WAY VALVE NP 14 REGULAR PATTERN

APPROVED FOR CONSTRUCTION

CUSTOMER APPROVAL BY: DATE: 05.12.75

FAB. STDS. REQ'D. THIS SHT	DESIGN	ELEC	INSTR	PIPING	STRUCT	NO	BY	DATE	REVISIONS
						9	MS	9/6/77	SEE REVISION LIST
						8	DL	22/9/77	SEE REVISION LIST.

DESIGN	ELEC	INSTR	PIPING	STRUCT	NO	BY	DATE	REVISIONS
					7	JA	24-9-76	SEE REVISION LIST
					6	JJP	9-4-76	SEE REVISION LIST
					5	JOY	20-11-75	RE-APPROVED FOR CONSTRUCTION
					4	GM	28-10-75	RE-ISSUED FOR CLIENT APPROVAL

APPROVED: Tony Dawson
for McDERMOTT — HUDSON
DATE: Nov. 4, 1975

ENGINEERS APPROVAL	BY	DATE
PROJECT		
STRUCTURAL		
PROCESS	BRW	4-11-75
MECHANICAL		5-11-75
ELECTRICAL		31-10-75
INSTRUMENT		27-6-77
PUB. CHECK		
PROJ. CHECK		

ELF-NORGE
FRIGG FIELD
TREATMENT/COMPRESSION PLATFORM No.2
NORTH SEA JOB 1-40-E2 WD. 104-M.
McDERMOTT — HUDSON
LONDON — ENGLAND

DRAWN BY	SCALE	DATE	DWG NO.
G. MEAGER	NONE	18-6-75	ELN 2169
DESIGNED BY		ZONE No	SHEET NO.
A. B. WORSFOLD		00	C 4014

PIPING AND INSTRUMENT DIAGRAM CONDENSATE STORAGE SYSTEM

DWG. NO. ELN 2169 | SHEET NO. C4013

CV3
CONDENSATE SURGE VESSEL
3.658 M I.D. x 9.144 T-T
(12'-0" I.D. x 30'-0" T-T)
DESIGN 19.98 BARS ABS. (289.7 PSIA) AT 50°C (122°F)
OPERATING 15 BARS ABS. (217.5 PSIA) AT 30°-50°C (86°-122°F)
VESSEL TRIM No C212EB-P

CV29 A&B&C
CONDENSATE PULSATION DAMPENERS

CP2 A&B&C
CONDENSATE RETURN PUMPS
331L/MIN AT 153 BARS ΔP EACH
(87.5 U.S. GPM AT 2,219 PSI ΔP)

CP1 A & B
CONDENSATE BOOSTER PUMPS
331 L/MIN AT 3 BARS ΔP EACH
(87.5 US. GPM AT 43.5 PSI ΔP)

TO H.P RELIEF SYSTEM HEADER C301ECX-24"-R COS C4027

TO L.P. VENT SYSTEM HEADER C401EA-14"-V COS C4029

TO L.P VENT SYSTEM HEADER C466EA-14"-V COS C4029

TO L.P VENT SYSTEM HEADER C401EA-14"-V COS C4029

COLD FUEL GAS HEADER C856EG-4"-FG-II

C198EB-3"-P CONDENSATE BURNER SUPPLY HEADER

C345ECX-12"-R

C405EA-6"-V

C856EG-4"-FG-II

C198EB-3"-P CONDENSATE BURNER SUPPLY HEADER

C180EB-12"-P CONDENSATE TO RECYCLE TANK CV3B

FROM CV4A COALESCER

CONDENSATE TO/FROM TP1

FIXED POINT

BRIDGE

C230EF

221EF(TP-1)

ESDV 8-3

SEE DETAIL B SHT C4004

C230EF-3"-P

C231EB-3"-P

C215EB-3'-P

C190EB-3"-P

C666EA-1"-FG

FUEL GAS FROM C879EA-2"-FG COS C4018

SET AT 11.5 BARA

SET AT 16 BARA

SET AT 16.38 BARA

SET AT 16.38 BARA

C1703ECX-2"-FG

FLASH GAS TO CV6 COS C4012

C337EB-10"R

CV3

C182 EB-4"-P

C183 EB-4"-P

C185 EB-3"-P

C184 EB-3"-P TO CV4A COALESCER

C406EA-2"-V SLOPE

C480EA-2"-V

C186EB-3"-P

CP1A

CP1B

START

STOP

NOTE 3

ESD

C186EB-12"-P

C710EB-12"-HD

C196EB-2"-P

C197 EB-3"-P

C195 EF-3"-P

C232EB-3"-P

C710EF-12"-HD

C190EF-3"-P

C195EF-3"-P

C189EF-3"-P

C188EF-3"-P

C187EB-3"-P

C2GBEB-3"-P FROM CV4B COALESCER

CV29A

CP2A

CV29B

CP2B

CV29C

CP2C

TEMRATURE & PRESSURE TEST POINTS.

MANUAL SAMPLER HOLD

NOTE 2

C214EF-3"-P

C228EB-3"-P

C226EF-3"-P

C227EF-3"-P

C229EB-3"-R

C190EF-3-P"

C267-EF-3"-P

C267-EF-3"-P

C524EA-4"-SC

C525EA-4"-SC

C193EB-3"P

C232EB-3"-P

TEMPERATURE & PRESSURE TEST POINTS

MANUAL SAMPLER

C232EB-3"-P

C194EB-4"-P

C197 EB-3'-P

C196 EB-2"-P

C187EF-3"-P

C189EB-3"-P

TO/FROM LSL-V38 -3A/C AND LSH-V38 -2A/C COS C4015

C284EF-3"-P

C267EB-2"-P

CONDENSATE TO SALES GAS LINES

HYDROCARBON DUMP HEADER C701EF-12"-HD

FROM CONDENSATE STORAGE TANK CV3B

OILY WATER TO CV5

CONDENSATE FROM CP1 A&B

CONDENSATE FROM CP9 A&B

TO PROCESS DRAINAGE SYSTEM HEADER C416EA-4"-DR COS C4025

NOTES:-
1. TEE AND RESTRICTION TO BE CLOSE TO PSH-V3-8B.
2. THIS PI IS USED AT START UP FOR SETTING CHOKE CSP-5E1/2, AND IS A TEST GAUGE AND NOT TAGGED
3. SIGNAL FROM PSL-M3-2 AND PSH-M3-2 COS C4011.

APPROVED FOR CONSTRUCTION
2 NOV 1977

NOTE:- ALL INSTRUMENTS AND VALVE TAG NOS INCLUDE THE PREFIX LETTER 'C'. Eg. PSH-CV2A-1

FAB. STDS. REQ'D THIS SHT.	DESIGN	STRUCT	PIPING	ELEC	MK	BY	DATE	REVISIONS
					8	MS	19/8/77	SEE REVISION LIST

DATE	APP.	DESIGN	STRUCT	PIPING	ELEC	MK	BY	DATE	REVISIONS
						7	RB	21-2-77	SEE REVISION LIST
						6	JL	20.9.76	SEE REVISION LIST
						5	BW	2.9.76	SEE REVISION LIST
						4	GM	24.10.75	SEE REVISION LIST

DATE	APP.	DESIGN	STRUCT	PIPING	ELEC	MK	BY	DATE	REVISIONS
						3	JGY	5-3-75	SEE REVISION LIST
						2	DJB	2.12.74	APPROVED FOR CONSTRUCTION
						1	AB	12-11-74	ISSUED FOR CLIENT APPROVAL
						0	FW	29-10-74	PRELIMINARY

DATE	APP.
3.11.76	
4.11.76	

APPROVED Tony Barnes
for DEMARIE — HUDSON
DATE Nov. 14, 1974
ENGINEERS APPROVAL

	BY	DATE
PROJECT	MJ	14.11.74
STRUCTURAL		
PROCESS	MJ	14.11.74
MECHANICAL		8.11.74
ELECTRICAL		14.11.74
INSTRUMENT		14.11.74
P&B DIVISION		
PROP. DIVISION		

ELF — NORGE
FRIGG FIELD

TREATMENT / COMPRESSION PLATFORM No.2
NORTH SEA JOB 1-40-E2 WD. 104-M.

McDERMOTT — HUDSON
LONDON — ENGLAND

DRAWN BY	SCALE	DATE	DWG NO
C BALL	NONE	23RD OCT 1974	ELN 2169
DESIGNED BY H.R.W.		00	SHEET NO C4013

PIPING & INSTRUMENT DIAGRAM CONDENSATE RECOVERY SYSTEM

PUBLISHED APPROVAL
SIGNED

S B H LTD. 2612

DWG. NO. ELN 2169 | SHEET NO. C4012

CE3
FUEL GAS HEAT EXCHANGER

DESIGN DUTY TUBESIDE		DESIGN DUTY SHELLSIDE	
FLOW	: 201,076 SCMD (7·1 x10⁶ SCFD)	FLOW	: 201,076 SCMD (7·1 x10⁶ SCFD)
TEMPERATURE	: 50°C (122°F)	TEMPERATURE	: -46°C (-50°F)
PRESSURE	: 172 BARS ABS. (2494 PSIA)	PRESSURE	: 16·19 BARS ABS. (220 PSIG)

INSULATION: 0,114 M (4·5 INS) CELLULAR GLASS

CV6
FUEL GAS SCRUBBER

0·914 M I.D. x 3·08 M T-T (36"I.D. x 10'-0" T-T)

CAPACITY :
DESIGN : 16·19 BARS ABS. (220 PSIG) AT -46°C (-50°F)
OPERATING : 14·81 BARS ABS. (200 PSIG) AT -23°C (-10°F)
INSULATION: 0·114 M (4½") CELLULAR GLASS
VESSEL TRIM Nº C864EG-FG

CV23
METHANOL STORAGE TANK

7·3 M (23'-11") L x 3·55 M (11'-8") W x 4 M (13'-2") H

CAPACITY : 100 m³ (26,412 U.S. GALS)
DESIGN : 1·35 BARS ABS. (5 PSIG) AT 21°C (71°F)
OPERATING : ATMOS PRESS AT -29°C TO 21°C (16°F-71°F)
VESSEL TRIM Nº C055EA-ME

CV32A&B
METHANOL PULSATION DAMPENERS

CP12A&B
METHANOL INJECTION PUMPS

0-10³ ℓ/HR AT 153 BARS ΔP
(0-4·4 USGP/MIN AT 2219 PSI ΔP)

CP17A&B
METHANOL TRANSFER PUMPS

227·1 ℓ/MIN AT 3·08 BARS ABS. HEAD
(60 USGP/MIN. AT 30 PSIG)

CM9
PIG RECEIVER, CONDENSATE FROM DP-2

VESSEL TRIM No. C179EF-P

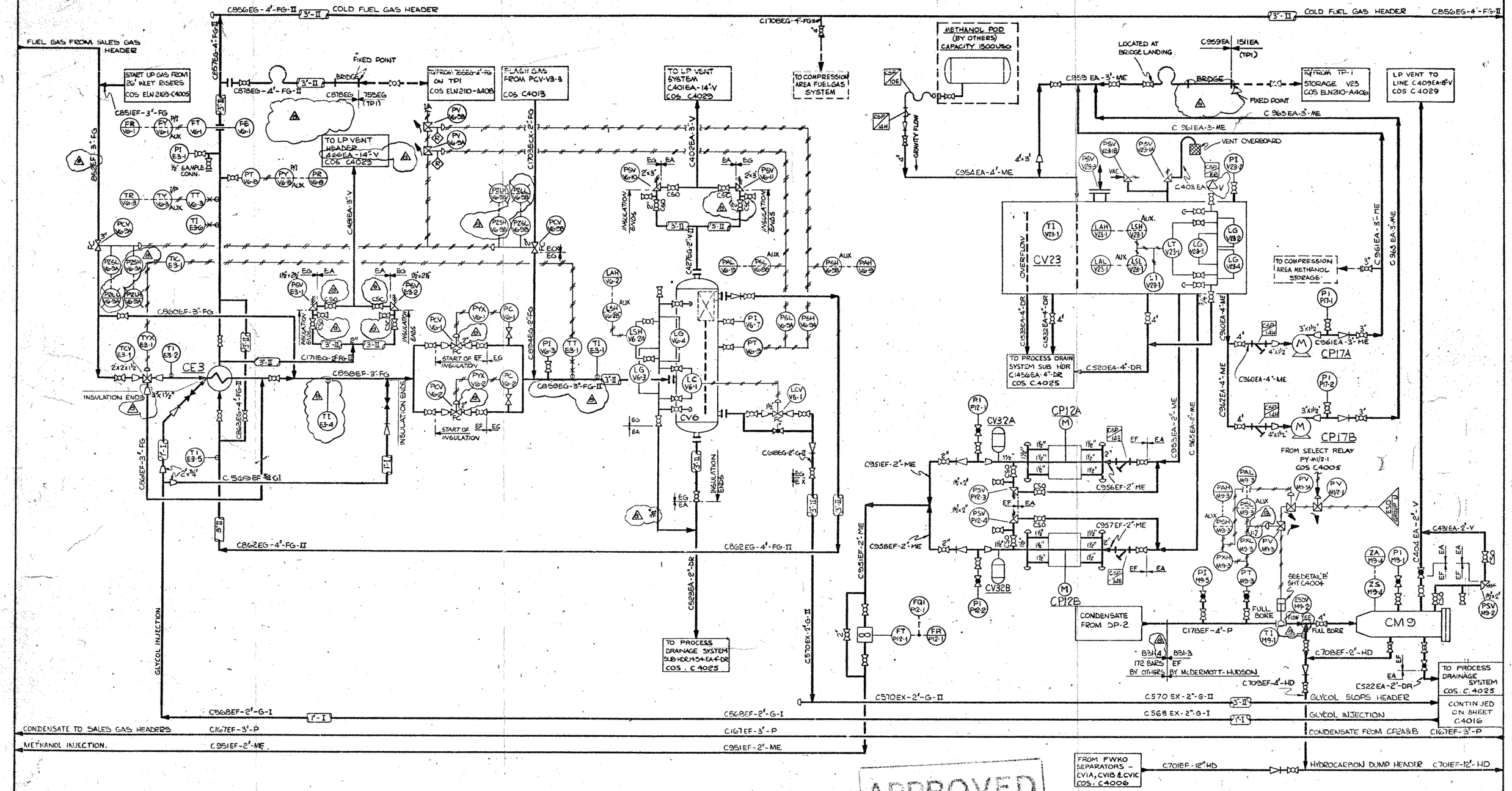
C855EG-4'-FG-II
3'-II
COLD FUEL GAS HEADER
FUEL GAS FROM SALES GAS HEADER
START UP GAS FROM 26' INLET RISERS COS ELN 2169-C4005
C851EF-3'-FG
C871EG-4'-FG-II
FIXED POINT
BRIDGE
TO/FROM 755EG-4'-FG ON TP1 COS ELN 2110-A406
FLASH GAS FROM PCV-V3-3 COS C4013
TO LP VENT SYSTEM C401EA-14'-V COS C4029
TO COMPRESSION AREA FUEL GAS SYSTEM
C170EG-4'-FG-II
TO LP VENT HEADER 466EA-14'-V COS C4029
C861EF-3'-FG
C860EF-3'-FG
C862EG-4'-FG-II
C863EF-3'-FG
C863EG-4'-FG-II
C868EG-4'-FG-II
C171EG-2'-FG-II
C858EF-3'-FG
C858EG-3'-FG-II
C402EA-3'-V
C403EA-3'-V
C171EG-2'-FG
C858EG-2'-FG
C427EG-2'-V
C428EA-2'-V
C429EA-2'-V
C430EA-2'-V
C431EA-2'-V
C432EA-2'-V
C433EA-2'-V
C434EA-2'-V
C435EA-2'-V
C436EA-2'-V
C437EA-2'-V
C438EA-2'-V
C439EA-2'-V
C440EA-2'-V
C441EA-2'-V
C442EA-2'-V
C443EA-2'-V
C444EA-2'-V
C445EA-2'-V
C446EA-2'-V
C447EA-2'-V
C448EA-2'-V
C449EA-2'-V
C450EA-2'-V
C451EA-2'-V
C452EA-2'-V
C453EA-2'-V
C454EA-2'-V
C455EA-2'-V
C456EA-2'-V
C457EA-2'-V
C458EA-2'-V
C459EA-2'-V
C460EA-2'-V
C461EA-2'-V
C462EA-2'-V
C463EA-2'-V
C464EA-2'-V
C465EA-2'-V
C466EA-14'-V
C467EA-2'-V
C468EA-2'-V
C469EA-2'-V
C470EA-2'-V
C471EA-2'-V
C472EA-2'-V
C473EA-2'-V
C474EA-2'-V
C475EA-2'-V
C476EA-2'-V
C477EA-2'-V
C478EA-2'-V
C479EA-2'-V
C480EA-2'-V
C481EA-2'-V
C482EA-2'-V
C483EA-2'-V
C484EA-2'-V
C485EA-2'-V
C486EA-2'-V
C487EA-2'-V
C488EA-2'-V
C489EA-2'-V
C490EA-2'-V
C491EA-2'-V
C492EA-2'-V
C493EA-2'-V
C494EA-2'-V
C495EA-2'-V
C496EA-2'-V
C497EA-2'-V
C498EA-2'-V
C499EA-2'-V
C500EA-2'-V
C501EA-2'-V
C502EA-2'-V
C503EA-2'-V
C504EA-2'-V
C505EA-2'-V
C506EA-2'-V
C507EA-2'-V
C508EA-2'-V
C509EA-2'-V
C510EA-2'-V
C511EA-2'-V
C512EA-2'-V
C513EA-2'-V
C514EA-2'-V
C515EA-2'-V
C516EA-2'-V
C517EA-2'-V
C518EA-2'-V
C519EA-2'-V
C520EA-4'-DR
C521EA-4'-DR
C522EA-2'-DR
C523EA-2'-DR
C524EA-2'-DR
C525EA-2'-DR
C526EA-2'-DR
C527EA-2'-DR
C528EA-2'-DR
C529EA-2'-DR
C530EA-2'-DR
C531EA-2'-DR
C532EA-2'-DR
C533EA-4'-DR
C534EA-2'-DR
C535EA-2'-DR
C536EA-2'-DR
C537EA-2'-DR
C538EA-2'-DR
C539EA-2'-DR
C540EA-2'-DR
C541EA-2'-DR
C542EA-2'-DR
C543EA-2'-DR
C544EA-2'-DR
C545EA-2'-DR
C546EA-2'-DR
C547EA-2'-DR
C548EA-2'-DR
C549EA-2'-DR
C550EA-2'-DR
C551EA-2'-DR
C552EA-2'-DR
C553EA-2'-DR
C554EA-2'-DR
C555EA-2'-DR
C556EA-2'-DR
C557EA-2'-DR
C558EA-2'-DR
C559EA-2'-DR
C560EA-2'-DR
C561EA-2'-DR
C562EA-2'-DR
C563EA-2'-DR
C564EA-2'-DR
C565EA-2'-DR
C566EA-2'-DR
C567EA-2'-DR
C568EA-2'-DR
C569EA-2'-DR
C570EA-2'-DR
C571EA-2'-DR
C572EA-2'-DR
C573EA-2'-DR
C574EA-2'-DR
C575EA-2'-DR
C576EA-2'-DR
C577EA-2'-DR
C578EA-2'-DR
C579EA-2'-DR
C580EA-2'-DR
C581EA-2'-DR
C582EA-2'-DR
C583EA-2'-DR
C584EA-2'-DR
C585EA-2'-DR
C586EA-2'-DR
C587EA-2'-DR
C588EA-2'-DR
C589EA-2'-DR
C590EA-2'-DR
C591EA-2'-DR
C592EA-2'-DR
C593EA-2'-DR
C594EA-2'-DR
C595EA-2'-DR
C596EA-2'-DR
C597EA-2'-DR
C598EA-2'-DR
C599EA-2'-DR
C600EA-2'-DR
C601EA-2'-DR
C602EA-2'-DR
C603EA-2'-DR
C604EA-2'-DR
C605EA-2'-DR
C606EA-2'-DR
C607EA-2'-DR
C608EA-2'-DR
C609EA-2'-DR
C610EA-2'-DR
C611EA-2'-DR
C612EA-2'-DR
C613EA-2'-DR
C614EA-2'-DR
C615EA-2'-DR
C616EA-2'-DR
C617EA-2'-DR
C618EA-2'-DR
C619EA-2'-DR
C620EA-2'-DR
C621EA-2'-DR
C622EA-2'-DR
C623EA-2'-DR
C624EA-2'-DR
C625EA-2'-DR
C626EA-2'-DR
C627EA-2'-DR
C628EA-2'-DR
C629EA-2'-DR
C630EA-2'-DR
C631EA-2'-DR
C632EA-2'-DR
C633EA-2'-DR
C634EA-2'-DR
C635EA-2'-DR
C636EA-2'-DR
C637EA-2'-DR
C638EA-2'-DR
C639EA-2'-DR
C640EA-2'-DR
C641EA-2'-DR
C642EA-2'-DR
C643EA-2'-DR
C644EA-2'-DR
C645EA-2'-DR
C646EA-2'-DR
C647EA-2'-DR
C648EA-2'-DR
C649EA-2'-DR
C650EA-2'-DR
C651EA-2'-DR
C652EA-2'-DR
C653EA-2'-DR
C654EA-2'-DR
C655EA-2'-DR
C656EA-2'-DR
C657EA-2'-DR
C658EA-2'-DR
C659EA-2'-DR
C660EA-2'-DR
C661EA-2'-DR
C662EA-2'-DR
C663EA-2'-DR
C664EA-2'-DR
C665EA-2'-DR
C666EA-2'-DR
C667EA-2'-DR
C668EA-2'-DR
C669EA-2'-DR
C670EA-2'-DR
C671EA-2'-DR
C672EA-2'-DR
C673EA-2'-DR
C674EA-2'-DR
C675EA-2'-DR
C676EA-2'-DR
C677EA-2'-DR
C678EA-2'-DR
C679EA-2'-DR
C680EA-2'-DR
C681EA-2'-DR
C682EA-2'-DR
C683EA-2'-DR
C684EA-2'-DR
C685EA-2'-DR
C686EA-2'-DR
C687EA-2'-DR
C688EA-2'-DR
C689EA-2'-DR
C690EA-2'-DR
C691EA-2'-DR
C692EA-2'-DR
C693EA-2'-DR
C694EA-2'-DR
C695EA-2'-DR
C696EA-2'-DR
C697EA-2'-DR
C698EA-2'-DR
C699EA-2'-DR
C700EA-2'-DR
C701EA-2'-DR
C702EA-2'-DR
C703EA-2'-DR
C704EA-2'-DR
C705EA-2'-DR
C706EA-2'-DR
C707EA-2'-DR
C708EA-2'-DR
C709EA-2'-DR
C710EA-2'-DR
C711EA-2'-DR
C712EA-2'-DR
C713EA-2'-DR
C714EA-2'-DR
C715EA-2'-DR
C716EA-2'-DR
C717EA-2'-DR
C718EA-2'-DR
C719EA-2'-DR
C720EA-2'-DR
C721EA-2'-DR
C722EA-2'-DR
C723EA-2'-DR
C724EA-2'-DR
C725EA-2'-DR
C726EA-2'-DR
C727EA-2'-DR
C728EA-2'-DR
C729EA-2'-DR
C730EA-2'-DR
C731EA-2'-DR
C732EA-2'-DR
C733EA-2'-DR
C734EA-2'-DR
C735EA-2'-DR
C736EA-2'-DR
C737EA-2'-DR
C738EA-2'-DR
C739EA-2'-DR
C740EA-2'-DR
C741EA-2'-DR
C742EA-2'-DR
C743EA-2'-DR
C744EA-2'-DR
C745EA-2'-DR
C746EA-2'-DR
C747EA-2'-DR
C748EA-2'-DR
C749EA-2'-DR
C750EA-2'-DR
C751EA-2'-DR
C752EA-2'-DR
C753EA-2'-DR
C754EA-2'-DR
C755EA-2'-DR
C756EA-2'-DR
C757EA-2'-DR
C758EA-2'-DR
C759EA-2'-DR
C760EA-2'-DR
C761EA-2'-DR
C762EA-2'-DR
C763EA-2'-DR
C764EA-2'-DR
C765EA-2'-DR
C766EA-2'-DR
C767EA-2'-DR
C768EA-2'-DR
C769EA-2'-DR
C770EA-2'-DR
C771EA-2'-DR
C772EA-2'-DR
C773EA-2'-DR
C774EA-2'-DR
C775EA-2'-DR
C776EA-2'-DR
C777EA-2'-DR
C778EA-2'-DR
C779EA-2'-DR
C780EA-2'-DR
C781EA-2'-DR
C782EA-2'-DR
C783EA-2'-DR
C784EA-2'-DR
C785EA-2'-DR
C786EA-2'-DR
C787EA-2'-DR
C788EA-2'-DR
C789EA-2'-DR
C790EA-2'-DR
C791EA-2'-DR
C792EA-2'-DR
C793EA-2'-DR
C794EA-2'-DR
C795EA-2'-DR
C796EA-2'-DR
C797EA-2'-DR
C798EA-2'-DR
C799EA-2'-DR
C800EA-2'-DR
C801EA-2'-DR
C802EA-2'-DR
C803EA-2'-DR
C804EA-2'-DR
C805EA-2'-DR
C806EA-2'-DR
C807EA-2'-DR
C808EA-2'-DR
C809EA-2'-DR
C810EA-2'-DR
C811EA-2'-DR
C812EA-2'-DR
C813EA-2'-DR
C814EA-2'-DR
C815EA-2'-DR
C816EA-2'-DR
C817EA-2'-DR
C818EA-2'-DR
C819EA-2'-DR
C820EA-2'-DR
C821EA-2'-DR
C822EA-2'-DR
C823EA-2'-DR
C824EA-2'-DR
C825EA-2'-DR
C826EA-2'-DR
C827EA-2'-DR
C828EA-2'-DR
C829EA-2'-DR
C830EA-2'-DR
C831EA-2'-DR
C832EA-2'-DR
C833EA-2'-DR
C834EA-2'-DR
C835EA-2'-DR
C836EA-2'-DR
C837EA-2'-DR
C838EA-2'-DR
C839EA-2'-DR
C840EA-2'-DR
C841EA-2'-DR
C842EA-2'-DR
C843EA-2'-DR
C844EA-2'-DR
C845EA-2'-DR
C846EA-2'-DR
C847EA-2'-DR
C848EA-2'-DR
C849EA-2'-DR
C850EA-2'-DR
C851EA-2'-DR
C852EA-2'-DR
C853EA-2'-DR
C854EA-2'-DR
C855EA-2'-DR
C856EA-2'-DR
C857EA-2'-DR
C858EA-2'-DR
C859EA-2'-DR
C860EA-2'-DR
C861EA-2'-DR
C862EA-2'-DR
C863EA-2'-DR
C864EA-2'-DR
C865EA-2'-DR
C866EA-2'-DR
C867EA-2'-DR
C868EA-2'-DR
C869EA-2'-DR
C870EA-2'-DR
C871EA-2'-DR
C872EA-2'-DR
C873EA-2'-DR
C874EA-2'-DR
C875EA-2'-DR
C876EA-2'-DR
C877EA-2'-DR
C878EA-2'-DR
C879EA-2'-DR
C880EA-2'-DR
C881EA-2'-DR
C882EA-2'-DR
C883EA-2'-DR
C884EA-2'-DR
C885EA-2'-DR
C886EA-2'-DR
C887EA-2'-DR
C888EA-2'-DR
C889EA-2'-DR
C890EA-2'-DR
C891EA-2'-DR
C892EA-2'-DR
C893EA-2'-DR
C894EA-2'-DR
C895EA-2'-DR
C896EA-2'-DR
C897EA-2'-DR
C898EA-2'-DR
C899EA-2'-DR
C900EA-2'-DR
C901EA-2'-DR
C902EA-2'-DR
C903EA-2'-DR
C904EA-2'-DR
C905EA-2'-DR
C906EA-2'-DR
C907EA-2'-DR
C908EA-2'-DR
C909EA-2'-DR
C910EA-2'-DR
C911EA-2'-DR
C912EA-2'-DR
C913EA-2'-DR
C914EA-2'-DR
C915EA-2'-DR
C916EA-2'-DR
C917EA-2'-DR
C918EA-2'-DR
C919EA-2'-DR
C920EA-2'-DR
C921EA-2'-DR
C922EA-2'-DR
C923EA-2'-DR
C924EA-2'-DR
C925EA-2'-DR
C926EA-2'-DR
C927EA-2'-DR
C928EA-2'-DR
C929EA-2'-DR
C930EA-2'-DR
C931EA-2'-DR
C932EA-2'-DR
C933EA-2'-DR
C934EA-2'-DR
C935EA-2'-DR
C936EA-2'-DR
C937EA-2'-DR
C938EA-2'-DR
C939EA-2'-DR
C940EA-2'-DR
C941EA-2'-DR
C942EA-2'-DR
C943EA-2'-DR
C944EA-2'-DR
C945EA-2'-DR
C946EA-2'-DR
C947EA-2'-DR
C948EA-2'-DR
C949EA-2'-DR
C950EA-2'-DR
C951EA-2'-DR
C952EA-2'-DR
C953EA-2'-DR
C954EA-2'-DR
C955EA-2'-DR
C956EA-2'-DR
C957EA-2'-DR
C958EA-2'-DR
C959EA-2'-DR
C960EA-2'-DR
C961EA-2'-DR
C962EA-2'-DR
C963EA-2'-DR
C964EA-2'-DR
C965EA-2'-DR
C966EA-2'-DR
C967EA-2'-DR
C968EA-2'-DR
C969EA-2'-DR
C970EA-2'-DR
C971EA-2'-DR
C972EA-2'-DR
C973EA-2'-DR
C974EA-2'-DR
C975EA-2'-DR
C976EA-2'-DR
C977EA-2'-DR
C978EA-2'-DR
C979EA-2'-DR
C980EA-2'-DR
C981EA-2'-DR
C982EA-2'-DR
C983EA-2'-DR
C984EA-2'-DR
C985EA-2'-DR
C986EA-2'-DR
C987EA-2'-DR
C988EA-2'-DR
C989EA-2'-DR
C990EA-2'-DR
C991EA-2'-DR
C992EA-2'-DR
C993EA-2'-DR
C994EA-2'-DR
C995EA-2'-DR
C996EA-2'-DR
C997EA-2'-DR
C998EA-2'-DR
C999EA-2'-DR
C1000EA-2'-DR
C1001EA-2'-DR
C1002EA-2'-DR
C1003EA-2'-DR
C1004EA-2'-DR
C1005EA-2'-DR
C1006EA-2'-DR
C1007EA-2'-DR
C1008EA-2'-DR
C1009EA-2'-DR
C1010EA-2'-DR
C1011EA-2'-DR
C1012EA-2'-DR
C1013EA-2'-DR
C1014EA-2'-DR
C1015EA-2'-DR
C1016EA-2'-DR
C1017EA-2'-DR
C1018EA-2'-DR
C1019EA-2'-DR
C1020EA-2'-DR
C1021EA-2'-DR
C1022EA-2'-DR
C1023EA-2'-DR
C1024EA-2'-DR
C1025EA-2'-DR
C1026EA-2'-DR
C1027EA-2'-DR
C1028EA-2'-DR
C1029EA-2'-DR
C1030EA-2'-DR
C1031EA-2'-DR
C1032EA-2'-DR
C1033EA-2'-DR
C1034EA-2'-DR
C1035EA-2'-DR
C1036EA-2'-DR
C1037EA-2'-DR
C1038EA-2'-DR
C1039EA-2'-DR
C1040EA-2'-DR
C1041EA-2'-DR
C1042EA-2'-DR
C1043EA-2'-DR
C1044EA-2'-DR
C1045EA-2'-DR
C1046EA-2'-DR
C1047EA-2'-DR
C1048EA-2'-DR
C1049EA-2'-DR
C1050EA-2'-DR
C1051EA-2'-DR
C1052EA-2'-DR
C1053EA-2'-DR
C1054EA-2'-DR
C1055EA-2'-DR
C1056EA-2'-DR
C1057EA-2'-DR
C1058EA-2'-DR
C1059EA-2'-DR
C1060EA-2'-DR
C1061EA-2'-DR
C1062EA-2'-DR
C1063EA-2'-DR
C1064EA-2'-DR
C1065EA-2'-DR
C1066EA-2'-DR
C1067EA-2'-DR
C1068EA-2'-DR
C1069EA-2'-DR
C1070EA-2'-DR
C1071EA-2'-DR
C1072EA-2'-DR
C1073EA-2'-DR
C1074EA-2'-DR
C1075EA-2'-DR
C1076EA-2'-DR
C1077EA-2'-DR
C1078EA-2'-DR
C1079EA-2'-DR
C1080EA-2'-DR
C1081EA-2'-DR
C1082EA-2'-DR
C1083EA-2'-DR
C1084EA-2'-DR
C1085EA-2'-DR
C1086EA-2'-DR
C1087EA-2'-DR
C1088EA-2'-DR
C1089EA-2'-DR
C1090EA-2'-DR
C1091EA-2'-DR
C1092EA-2'-DR
C1093EA-2'-DR
C1094EA-2'-DR
C1095EA-2'-DR
C1096EA-2'-DR
C1097EA-2'-DR
C1098EA-2'-DR
C1099EA-2'-DR
C1100EA-2'-DR
C1101EA-2'-DR
C1102EA-2'-DR
C1103EA-2'-DR
C1104EA-2'-DR
C1105EA-2'-DR
C1106EA-2'-DR
C1107EA-2'-DR
C1108EA-2'-DR
C1109EA-2'-DR
C1110EA-2'-DR
C1111EA-2'-DR
C1112EA-2'-DR
C1113EA-2'-DR
C1114EA-2'-DR
C1115EA-2'-DR
C1116EA-2'-DR
C1117EA-2'-DR
C1118EA-2'-DR
C1119EA-2'-DR
C1120EA-2'-DR
C1121EA-2'-DR
C1122EA-2'-DR
C1123EA-2'-DR
C1124EA-2'-DR
C1125EA-2'-DR
C1126EA-2'-DR
C1127EA-2'-DR
C1128EA-2'-DR
C1129EA-2'-DR
C1130EA-2'-DR
C1131EA-2'-DR
C1132EA-2'-DR
C1133EA-2'-DR
C1134EA-2'-DR
C1135EA-2'-DR
C1136EA-2'-DR
C1137EA-2'-DR
C1138EA-2'-DR
C1139EA-2'-DR
C1140EA-2'-DR
C1141EA-2'-DR
C1142EA-2'-DR
C1143EA-2'-DR
C1144EA-2'-DR
C1145EA-2'-DR
C1146EA-2'-DR
C1147EA-2'-DR
C1148EA-2'-DR
C1149EA-2'-DR
C1150EA-2'-DR
C1151EA-2'-DR
C1152EA-2'-DR
C1153EA-2'-DR
C1154EA-2'-DR
C1155EA-2'-DR
C1156EA-2'-DR
C1157EA-2'-DR
C1158EA-2'-DR
C1159EA-2'-DR
C1160EA-2'-DR
C1161EA-2'-DR
C1162EA-2'-DR
C1163EA-2'-DR
C1164EA-2'-DR
C1165EA-2'-DR
C1166EA-2'-DR
C1167EA-2'-DR
C1168EA-2'-DR
C1169EA-2'-DR
C1170EA-2'-DR
C1171EA-2'-DR
C1172EA-2'-DR
C1173EA-2'-DR
C1174EA-2'-DR
C1175EA-2'-DR
C1176EA-2'-DR
C1177EA-2'-DR
C1178EA-2'-DR
C1179EA-2'-DR
C1180EA-2'-DR
C1181EA-2'-DR
C1182EA-2'-DR
C1183EA-2'-DR
C1184EA-2'-DR
C1185EA-2'-DR
C1186EA-2'-DR
C1187EA-2'-DR
C1188EA-2'-DR
C1189EA-2'-DR
C1190EA-2'-DR
C1191EA-2'-DR
C1192EA-2'-DR
C1193EA-2'-DR
C1194EA-2'-DR
C1195EA-2'-DR
C1196EA-2'-DR
C1197EA-2'-DR
C1198EA-2'-DR
C1199EA-2'-DR
C1200EA-2'-DR
C1201EA-2'-DR
C1202EA-2'-DR
C1203EA-2'-DR
C1204EA-2'-DR
C1205EA-2'-DR
C1206EA-2'-DR
C1207EA-2'-DR
C1208EA-2'-DR
C1209EA-2'-DR
C1210EA-2'-DR
C1211EA-2'-DR
C1212EA-2'-DR
C1213EA-2'-DR
C1214EA-2'-DR
C1215EA-2'-DR
C1216EA-2'-DR
C1217EA-2'-DR
C1218EA-2'-DR
C1219EA-2'-DR
C1220EA-2'-DR
C1221EA-2'-DR
C1222EA-2'-DR
C1223EA-2'-DR
C1224EA-2'-DR
C1225EA-2'-DR
C1226EA-2'-DR
C1227EA-2'-DR
C1228EA-2'-DR
C1229EA-2'-DR
C1230EA-2'-DR
C1231EA-2'-DR
C1232EA-2'-DR
C1233EA-2'-DR
C1234EA-2'-DR
C1235EA-2'-DR
C1236EA-2'-DR
C1237EA-2'-DR
C1238EA-2'-DR
C1239EA-2'-DR
C1240EA-2'-DR
C1241EA-2'-DR
C1242EA-2'-DR
C1243EA-2'-DR
C1244EA-2'-DR
C1245EA-2'-DR
C1246EA-2'-DR
C1247EA-2'-DR
C1248EA-2'-DR
C1249EA-2'-DR
C1250EA-2'-DR
C1251EA-2'-DR
C1252EA-2'-DR
C1253EA-2'-DR
C1254EA-2'-DR
C1255EA-2'-DR
C1256EA-2'-DR
C1257EA-2'-DR
C1258EA-2'-DR
C1259EA-2'-DR
C1260EA-2'-DR
C1261EA-2'-DR
C1262EA-2'-DR
C1263EA-2'-DR
C1264EA-2'-DR
C1265EA-2'-DR
C1266EA-2'-DR
C1267EA-2'-DR
C1268EA-2'-DR
C1269EA-2'-DR
C1270EA-2'-DR
C1271EA-2'-DR
C1272EA-2'-DR
C1273EA-2'-DR
C1274EA-2'-DR
C1275EA-2'-DR
C1276EA-2'-DR
C1277EA-2'-DR
C1278EA-2'-DR
C1279EA-2'-DR
C1280EA-2'-DR
C1281EA-2'-DR
C1282EA-2'-DR
C1283EA-2'-DR
C1284EA-2'-DR
C1285EA-2'-DR
C1286EA-2'-DR
C1287EA-2'-DR
C1288EA-2'-DR
C1289EA-2'-DR
C1290EA-2'-DR
C1291EA-2'-DR
C1292EA-2'-DR
C1293EA-2'-DR
C1294EA-2'-DR
C1295EA-2'-DR
C1296EA-2'-DR
C1297EA-2'-DR
C1298EA-2'-DR
C1299EA-2'-DR
C1300EA-2'-DR
C1301EA-2'-DR
C1302EA-2'-DR
C1303EA-2'-DR
C1304EA-2'-DR
C1305EA-2'-DR
C1306EA-2'-DR
C1307EA-2'-DR
C1308EA-2'-DR
C1309EA-2'-DR
C1310EA-2'-DR
C1311EA-2'-DR
C1312EA-2'-DR
C1313EA-2'-DR
C1314EA-2'-DR
C1315EA-2'-DR
C1316EA-2'-DR
C1317EA-2'-DR
C1318EA-2'-DR
C1319EA-2'-DR
C1320EA-2'-DR
C1321EA-2'-DR
C1322EA-2'-DR
C1323EA-2'-DR
C1324EA-2'-DR
C1325EA-2'-DR
C1326EA-2'-DR
C1327EA-2'-DR
C1328EA-2'-DR
C1329EA-2'-DR
C1330EA-2'-DR
C1331EA-2'-DR
C1332EA-2'-DR
C1333EA-2'-DR
C1334EA-2'-DR
C1335EA-2'-DR
C1336EA-2'-DR
C1337EA-2'-DR
C1338EA-2'-DR
C1339EA-2'-DR
C1340EA-2'-DR
C1341EA-2'-DR
C1342EA-2'-DR
C1343EA-2'-DR
C1344EA-2'-DR
C1345EA-2'-DR
C1346EA-2'-DR
C1347EA-2'-DR
C1348EA-2'-DR
C1349EA-2'-DR
C1350EA-2'-DR
C1351EA-2'-DR
C1352EA-2'-DR
C1353EA-2'-DR
C1354EA-2'-DR
C1355EA-2'-DR
C1356EA-2'-DR
C1357EA-2'-DR
C1358EA-2'-DR
C1359EA-2'-DR
C1360EA-2'-DR
C1361EA-2'-DR
C1362EA-2'-DR
C1363EA-2'-DR
C1364EA-2'-DR
C1365EA-2'-DR
C1366EA-2'-DR
C1367EA-2'-DR
C1368EA-2'-DR
C1369EA-2'-DR
C1370EA-2'-DR
C1371EA-2'-DR
C1372EA-2'-DR
C1373EA-2'-DR
C1374EA-2'-DR
C1375EA-2'-DR
C1376EA-2'-DR
C1377EA-2'-DR
C1378EA-2'-DR
C1379EA-2'-DR
C1380EA-2'-DR
C1381EA-2'-DR
C1382EA-2'-DR
C1383EA-2'-DR
C1384EA-2'-DR
C1385EA-2'-DR
C1386EA-2'-DR
C1387EA-2'-DR
C1388EA-2'-DR
C1389EA-2'-DR
C1390EA-2'-DR
C1391EA-2'-DR
C1392EA-2'-DR
C1393EA-2'-DR
C1394EA-2'-DR
C1395EA-2'-DR
C1396EA-2'-DR
C1397EA-2'-DR
C1398EA-2'-DR
C1399EA-2'-DR
C1400EA-2'-DR
C1401EA-14'-V
C1402EA-2'-DR
C1403EA-2'-DR
C1404EA-2'-DR
C1405EA-2'-DR
C1406EA-2'-DR
C1407EA-2'-DR
C1408EA-2'-DR
C1409EA-2'-DR
C1410EA-2'-DR
C1411EA-2'-DR
C1412EA-2'-DR
C1413EA-2'-DR
C1414EA-2'-DR
C1415EA-2'-DR
C1416EA-2'-DR
C1417EA-2'-DR
C1418EA-2'-DR
C1419EA-2'-DR
C1420EA-2'-DR
C1421EA-2'-DR
C1422EA-2'-DR
C1423EA-2'-DR
C1424EA-2'-DR
C1425EA-2'-DR
C1426EA-2'-DR
C1427EA-2'-DR
C1428EA-2'-DR
C1429EA-2'-DR
C1430EA-2'-DR
C1431EA-2'-DR
C1432EA-2'-DR
C1433EA-2'-DR
C1434EA-2'-DR
C1435EA-2'-DR
C1436EA-2'-DR
C1437EA-2'-DR
C1438EA-2'-DR
C1439EA-2'-DR
C1440EA-2'-DR
C1441EA-2'-DR
C1442EA-2'-DR
C1443EA-2'-DR
C1444EA-2'-DR
C1445EA-2'-DR
C1446EA-2'-DR
C1447EA-2'-DR
C1448EA-2'-DR
C1449EA-2'-DR
C1450EA-2'-DR
C1451EA-2'-DR
C1452EA-2'-DR
C1453EA-2'-DR
C1454EA-2'-DR
C1455EA-2'-DR
C1456EA-2'-DR
C1457EA-2'-DR
C1458EA-2'-DR
C1459EA-2'-DR
C1460EA-2'-DR
C1461EA-2'-DR
C1462EA-2'-DR
C1463EA-2'-DR
C1464EA-2'-DR
C1465EA-2'-DR
C1466EA-2'-DR
C1467EA-2'-DR
C1468EA-2'-DR
C1469EA-2'-DR
C1470EA-2'-DR
C1471EA-2'-DR
C1472EA-2'-DR
C1473EA-2'-DR
C1474EA-2'-DR
C1475EA-2'-DR
C1476EA-2'-DR
C1477EA-2'-DR
C1478EA-2'-DR
C1479EA-2'-DR
C1480EA-2'-DR
C1481EA-2'-DR
C1482EA-2'-DR
C1483EA-2'-DR
C1484EA-2'-DR
C1485EA-2'-DR
C1486EA-2'-DR
C1487EA-2'-DR
C1488EA-2'-DR
C1489EA-2'-DR
C1490EA-2'-DR
C1491EA-2'-DR
C1492EA-2'-DR
C1493EA-2'-DR
C1494EA-2'-DR
C1495EA-2'-DR
C1496EA-2'-DR
C1497EA-2'-DR
C1498EA-2'-DR
C1499EA-2'-DR
C1500EA-2'-DR
C1501EA-2'-DR
C1502EA-2'-DR
C1503EA-2'-DR
C1504EA-2'-DR
C1505EA-2'-DR
C1506EA-2'-DR
C1507EA-2'-DR
C1508EA-2'-DR
C1509EA-2'-DR
C1510EA-2'-DR
C1511EA-2'-DR
C1512EA-2'-DR
C1513EA-2'-DR
C1514EA-2'-DR
C1515EA-2'-DR
C1516EA-2'-DR
C1517EA-2'-DR
C1518EA-2'-DR
C1519EA-2'-DR
C1520EA-2'-DR
C1521EA-2'-DR
C1522EA-2'-DR
C1523EA-2'-DR
C1524EA-2'-DR
C1525EA-2'-DR
C1526EA-2'-DR
C1527EA-2'-DR
C1528EA-2'-DR
C1529EA-2'-DR
C1530EA-2'-DR
C1531EA-2'-DR
C1532EA-2'-DR
C1533EA-2'-DR
C1534EA-2'-DR
C1535EA-2'-DR
C1536EA-2'-DR
C1537EA-2'-DR
C1538EA-2'-DR
C1539EA-2'-DR
C1540EA-2'-DR
C1541EA-2'-DR
C1542EA-2'-DR
C1543EA-2'-DR
C1544EA-2'-DR
C1545EA-2'-DR
C1546EA-2'-DR
C1547EA-2'-DR
C1548EA-2'-DR
C1549EA-2'-DR
C1550EA-2'-DR
C1551EA-2'-DR
C1552EA-2'-DR
C1553EA-2'-DR
C1554EA-2'-DR
C1555EA-2'-DR
C1556EA-2'-DR
C1557EA-2'-DR
C1558EA-2'-DR
C1559EA-2'-DR
C1560EA-2'-DR
C1561EA-2'-DR
C1562EA-2'-DR
C1563EA-2'-DR
C1564EA-2'-DR
C1565EA-2'-DR
C1566EA-2'-DR
C1567EA-2'-DR
C1568EA-2'-DR
C1569EA-2'-DR
C1570EA-2'-DR
C1571EA-2'-DR
C1572EA-2'-DR
C1573EA-2'-DR
C1574EA-2'-DR
C1575EA-2'-DR
C1576EA-2'-DR
C1577EA-2'-DR
C1578EA-2'-DR
C1579EA-2'-DR
C1580EA-2'-DR
C1581EA-2'-DR
C1582EA-2'-DR
C1583EA-2'-DR
C1584EA-2'-DR
C1585EA-2'-DR
C1586EA-2'-DR
C1587EA-2'-DR
C1588EA-2'-DR
C1589EA-2'-DR
C1590EA-2'-DR
C1591EA-2'-DR
C1592EA-2'-DR
C1593EA-2'-DR
C1594EA-2'-DR
C1595EA-2'-DR
C1596EA-2'-DR
C1597EA-2'-DR
C1598EA-2'-DR
C1599EA-2'-DR
C1600EA-2'-DR
C1601EA-2'-DR
C1602EA-2'-DR
C1603EA-2'-DR
C1604EA-2'-DR
C1605EA-2'-DR
C1606EA-2'-DR
C1607EA-2'-DR
C1608EA-2'-DR
C1609EA-2'-DR
C1610EA-2'-DR
C1611EA-2'-DR
C1612EA-2'-DR
C1613EA-2'-DR
C1614EA-2'-DR
C1615EA-2'-DR
C1616EA-2'-DR
C1617EA-2'-DR
C1618EA-2'-DR
C1619EA-2'-DR
C1620EA-2'-DR
C1621EA-2'-DR
C1622EA-2'-DR
C1623EA-2'-DR
C1624EA-2'-DR
C1625EA-2'-DR
C1626EA-2'-DR
C1627EA-2'-DR
C1628EA-2'-DR
C1629EA-2'-DR
C1630EA-2'-DR
C1631EA-2'-DR
C1632EA-2'-DR
C1633EA-2'-DR
C1634EA-2'-DR
C1635EA-2'-DR
C1636EA-2'-DR
C1637EA-2'-DR
C1638EA-2'-DR
C1639EA-2'-DR
C1640EA-2'-DR
C1641EA-2'-DR
C1642EA-2'-DR
C1643EA-2'-DR
C1644EA-2'-DR
C1645EA-2'-DR
C1646EA-2'-DR
C1647EA-2'-DR
C1648EA-2'-DR
C1649EA-2'-DR
C1650EA-2'-DR
C1651EA-2'-DR
C1652EA-2'-DR
C1653EA-2'-DR
C1654EA-2'-DR
C1655EA-2'-DR
C1656EA-2'-DR
C1657EA-2'-DR
C1658EA-2'-DR
C1659EA-2'-DR
C1660EA-2'-DR
C1661EA-2'-DR
C1662EA-2'-DR
C1663EA-2'-DR
C1664EA-2'-DR
C1665EA-2'-DR
C1666EA-2'-DR
C1667EA-2'-DR
C1668EA-2'-DR
C1669EA-2'-DR
C1670EA-2'-DR
C1671EA-2'-DR
C1672EA-2'-DR
C1673EA-2'-DR
C1674EA-2'-DR
C1675EA-2'-DR
C1676EA-2'-DR
C1677EA-2'-DR
C1678EA-2'-DR
C1679EA-2'-DR
C1680EA-2'-DR
C1681EA-2'-DR
C1682EA-2'-DR
C1683EA-2'-DR
C1684EA-2'-DR
C1685EA-2'-DR
C1686EA-2'-DR
C1687EA-2'-DR
C1688EA-2'-DR
C1689EA-2'-DR
C1690EA-2'-DR
C1691EA-2'-DR
C1692EA-2'-DR
C1693EA-2'-DR
C1694EA-2'-DR
C1695EA-2'-DR
C1696EA-2'-DR
C1697EA-2'-DR
C1698EA-2'-DR
C1699EA-2'-DR
C

DWG NO. ELN 2169 | SHEET NO. C4011

CM13
NORWEGIAN PIG LAUNCHER GAS

CQ8B (FUTURE)
LOCAL CONTROL STATION

CM3
SCOTTISH PIG LAUNCHER GAS
VESSEL TRIM No C1G5 = - P

CQ8A
LOCAL CONTROL STATION

NOTE
1. IF MC-M1B1, MC-M3-1 OR MC-M3-1 ON TP1, IF MANUALLY SELECTED, AND A STREAM MOISTURE ANALYSER MC-V2A-1, MGV2B-1, OR MC-V2C-1 ARE IN AN ALARM CONDITION THEN THAT STREAM IS SHUTDOWN.
2. ALL 4 PSV POSITIONS ARE TELEMETERED TO QP BUT THERE IS ONLY 1 COMMON ALARM.
3. LOCAL LIGHTS ARE PART OF HYDRAULIC CONTROL UNIT.
4. ITEMS SUPPLIED BY BROWN & ROOT TO TOM SPECIFICATION.

FUEL GAS FROM GLYCOL CONTACTORS
C852EF-3"-FG
C877EF-3"-FG
FUEL GAS
C852EF-3"-FG
C875EF-3"-FG
FUEL GAS TO CE3

TO L.P VENT HEADER C480EA2"-V COS C4029
TO HP RELIEF SYSTEM MAIN HDR C301ECX-24"-R COS C4027
C831ECX-8"-R
C832ECX-8"-R
C833ECX-8"-R
C834ECX-8"-R
3"x4" PSV V2A-8
3"x4" PSV V2A-9
3"x4" PSV V2A-10
3"x4" PSV V2A-11
4"x8" C60
6"x3" C60
C60
CSC
ZSL V2A-8
ZSL V2A-9
ZSL V2A-10
ZSL V2A-11
FROM MC-V2A,B,C-1 COS C4010 (SEE NOTE 1)
SEE NOTE 2
ZAL V2A-8
EF2 V8L
EF EE
SCOTTISH SALES GAS HEADER
C131EE-32"-P
SCOTTISH SALES GAS HEADER
½" SAMPLE
NORWEGIAN SALES GAS HEADER 16"
BY INST
ME M3-1
MT M3-1
TO/FROM HYDRAULIC POWER SUPPLY COS C4032 RETURN DELIVERY
HZLL M3-3A
HZLL M3-3B
PIG LAUNCH LOCATED ON QP
NOTE 3
HS M3-1A
HS M3-1B
LOCAL PIG LAUNCH
REMOTE
ESD
TO HP RELIEF SYSTEM MAIN HDR C301ECX-24"-R COS C4027
C131EE-32"-P
EE
C164*-16"-P
TO/FROM HYDRAULIC POWER SUPPLY COS C4032 RETURN DELIVERY
CORROSION MONITORING STATION (BY B&R)
PIG LAUNCH LOCATED ON QP
NOTE 3
HS M3-4A
HS M3-4B
LOCAL PIG LAUNCH
REMOTE
ESD
STOP PUMPS CP1A&B & CP2A&B, COS C4013
NOTE 3
HZLL M3-1A
HZLL M3-1B
HZLH M3-1C
HZLH M3-1D
HYDRAULIC CONTROL UNIT SEE DWG: C4032 CQ8B (FUTURE)
ESD RELAY CABINET IN INSTRUMENT INTERFACE ROOM
AUX
PAL M3-2
PAH M3-2
PSL M3-2
PSH M3-2
PT M3-2
PI M3-7
PT M3-8
PXL M3-2A
PXH M3-2B
PV M3-2A
PV M3-2B
PAL M3-3
PAH M3-3
PSL M3-3
PSH M3-3
PAL M3-3A
PAH M3-3A
PSL M3-3A
PSH M3-3A
HZSL M3-3
HZSH M3-3
HZLL M3-3A
HZLH M3-3B
HV M3-3
HZSL M3-2
HZSH M3-2
HZLL M3-2A
HZLH M3-2B
HV M3-2
HZLL M3-1A
HZLH M3-1C
HZSL M3-1
HZSH M3-1
HZLL M3-1B
HZLH M3-1D
HV M3-1
PSV M13-1
PT M13-1
ZA M13-1
ZS M13-1
NOTE 3
HZSH M13-3
HZSL M13-3
HZLL M13-3A
HZLH M13-3B
HZLL M13-2A
HZLH M13-2B
HZSL M13-2
HZSH M13-2
HZLL M13-2C
HZLH M13-2D
HV M13-2
HV M13-3
NC
FLOW TEE
FULL BORE
ZA M13-2
ZS M13-2
PIG SIGNAL MANUAL RESET
EF
EFH EF2 W7H
EFL EF2 W7L
ZSH EF2 W7H
ZSL EF2 W7L
ELH EF2 W7H
ZSH EF2 W7H
ZSL EF2 W7L
SALES GAS TO NORWAY
CM13
SEE DETAILS SHT C4004
PT M13-3
PI M13-5
PV M13-2A
PV M13-2B
PXL M13-2A
PXH M13-2B
PAL M13-3
PAH M13-3
PSL M13-3A
PSH M13-3A
PAL M13-2
PAH M13-2
PSL M13-2
PSH M13-2
AUX
PV IP-2
PAH IP-2
PAL IP-2
FROM HOLD
SDV M13-1
ESD M13-1
ESV M13-1
TI M13-1
C63
C519EA-4"-DR
EA
TO PROCESS DRAINAGE SYSTEM SUB-HDR C1461EA-4"-DR COS C4025
C933ECX-2"-R
ECX
SEE NOTE 4
PSV M3-1
PT M3-1
HV M3-1
HZLL M3-1A
HZLH M3-1C
HZSL M3-1
HZSH M3-1
HZLL M3-1B
HZLH M3-1D
CSO
CM3
SEE NOTE 4
C163*-32"-P
C162*-32"-P
HYDRAULIC CONTROL UNIT SEE DWG: C4032 CQ8A
SEE NOTE 4
HZSL M3-3
HZSH M3-3
HZLL M3-3A
HZLH M3-3B
HV M3-3
HZSL M3-2
HZSH M3-2
HZLL M3-2A
HZLH M3-2B
HV M3-2
NOTE 3
ESD RELAY CABINET IN INSTRUMENT INTERFACE ROOM
PAL M3-3
PAH M3-3
PSL M3-3
PSH M3-3
PAL M3-3A
PAH M3-3A
PSL M3-3A
PSH M3-3A
AUX
PT M3-8
ZA M3-2
ZS M3-2
PIG SIGNAL MANUAL RESET
SEE NOTE 4
ESDV M3-1
ESD M3-1
EF2 W2L
ZLH EF2 W2L
ZSH EF2 W2L
ZLL EF2 W2L
C952EF-2"-ME
C167EF-3"-P
CONDENSATE FROM CP2A&B
C163*-32"-P
FULL BORE
EF
EZY IP-1
AUX
30MMSCMD
150BARS
BY McDERMOTT HUDSON
BY OTHERS
SALES GAS TO ST. FERGUS SCOTLAND
C172EF-3"-G
FROM CP2A&B
PT M3-5
PI M3-5
PV IP-1
PAH IP-1
PAL IP-1
PV M3-2A
PV M3-2B
PXL M3-2A
PXH M3-2B
C952EF-2"-ME
METHANOL INJECTION
C951EF-2"-ME
METHANOL INJECTION FROM CP2A&B
TO PROCESS DRAINAGE SYSTEM SUB-HDR C1461EA-4"-DR COS C4025

APPROVED
FOR CONSTRUCTION
8 NOV 1977

*TOTAL OIL MARINE SPECIFICATION MP-L-1,6,7,8,9,10,11,12,13 (900# ANSI RATING)

NOTE:-
ALL INSTRUMENT AND VALVE TAG NOS INCLUDE THE PREFIX LETTER 'C' E.G. PSH-CV2A-1.

CUSTOMER APPROVAL
5/12/74

ENGINEERS APPROVAL
McDERMOTT - HUDSON
DATE Nov. 14 1974

FAB. STDS REQ'D. THIS SHT.	DESIGN	STRUCT	PIPING	ELEC	HK	BY	DATE	REVISIONS	DATE	APP.
					7	LS	21-2-77	SEE REVISION LIST		
					6	JL	20-9-76	SEE REVISION LIST		
					5	JP	9-4-76	SEE REVISION LIST		
				B	4	SAW	29-9-75	SEE REVISION LIST		
					3	LS	24/9/75	SEE REVISION LIST		
					2	CB	2-12-74	APPROVED FOR CONSTRUCTION		
					1	CB	11-11-74	ISSUED FOR CLIENT APPROVAL		
					0	CB		PRELIMINARY		

	BY	DATE
PROJECT	GF	14.11.74
STRUCTURAL		
PIPING		
MECHANICAL		
ELECTRICAL		
INSTRUMENT		
FAB. CHECK		
DESIGN CHECK		

ELF - NORGE
FRIGG FIELD
TREATMENT / COMPRESSION PLATFORM No.2
NORTH SEA JOB 1-40-E2 WD. 104-M.
McDERMOTT - HUDSON
LONDON - ENGLAND

DRAWN BY	SCALE	DATE	DWG NO.
A.WALLACE	NONE	18 SEPT 74	ELN 2169
DESIGNED BY			SHEET NO.
A.R.W.		00	C4011

PIPING AND INSTRUMENT DIAGRAM SCOTTISH AND NORWEGIAN PIG LAUNCHERS

DWG NO ELN 2169. | SHEET NO C4010

TO HP RELIEF SYSTEM MAIN HDR C301 ECX-24"-R COS C4027

TO HP RELIEF SYSTEM MAIN HDR C301ECX-24"-R COS C4027

TO ST FERGUS

HP GAS FROM GLYCOL CONTACTOR CV2C

HP GAS FROM GLYCOL CONTACTOR CV2B

HP GAS FROM GLYCOL CONTACTOR CV2A

SCOTTISH SALES GAS HEADER

NORWEGIAN SALES GAS HDR

32" DRY GAS TO/FROM TP-1

FUEL GAS TO CES

BY INSTRUMENTS HOLD

MANUAL SAMPLER

LOCAL PANEL COMPUTER

SELECTOR SWITCH

TO/FROM MC-M13-1 & M3-1 SEE NOTE 1 COS C 4011

TO LP VENT HEADER CV2B-E-V COS C 4029

TO LP VENT HEADER CV2C-E-V COS C 4029

TO/FROM MC-M13-1 & M3-1 SEE NOTE 1 COS C 4011

TO FLARE GAS IGNITION PANEL ON TP-1 COS ELN 2110-A419

16" NORWEGIAN SALES GAS HEADER

32" DRY GAS TO/FROM TP-1 HEADER

C 130 EE-32"-P NOTE 7

NOTE 7

32" DRY GAS TO/FROM TP-1 HEADER C130EE-32"-P NOTE 7

16" NORWEGIAN SALES GAS HEADER

NORWEGIAN SALES GAS HEADER

METHANOL INJECTION C 95 EF-2"-ME

TO COMPRESSION AREA FUEL GAS SYSTEM

APPROVED FOR CONSTRUCTION 2 NOV '77

NOTE:- ALL INSTRUMENTS AND VALVE TAG Nos INCLUDE THE PREFIX LETTER 'C' EG:- PSH-CV2A-1

NOTES:-

1. SIGNAL TRANSMISSION IS VIA TRANSDUCER ROOM TO TELEMETERY & COMPUTER SYSTEM
2. PANEL 'C' LOCATED ADJACENT TO FE-V2C-2
3. PANEL 'B' LOCATED ADJACENT TO FE-V2B-2
4. PANEL 'A' LOCATED ADJACENT TO FE-V2A-2
5. SALES GAS PRESSURE ALARMS HIGH & LOW TO ST. FERGUS & REPEATED ON MAIN BOARD CAN BE SELECTED VIA HS-V2B-18A TO BE ANY ONE OF THREE VALUES:-
   A. THE SETTING OF THE LOCAL PHS/PSL
   B. THE SETTING OF THE DIGITAL ALARM UNIT ON GP PSHL-V2B-18
   C. DIRECT SETTING BY THE COMPUTER
6. PRESSURE RESET PANEL TO BE LOCATED ADJACENT TO ONE OF THE ABOVE 3 PANELS
7. THESE PORTIONS OF PIPE ARE RUN EF FOR MATERIAL CONVENIENCE AND HAVE OPERATING DESIGN & HYDROSTATIC TEST PRESSURES IN ACCORDANCE WITH EE SPEC
8. PANEL TO BE IN SIGHT OF REMOTE FLARE
9. THIS PI IS USED AT START UP TO SET CHOKES CSP-501, CSP-5C½ AND IS NOT TAGGED

FAB. STDS. REQ'D. THIS SHT.

DESIGN	ELEC	INSTR.	PIPING	STRUCT	NO.	BY	DATE	REVISIONS	DATE	APP.
					11	RB	18-8-77	SEE REVISION LIST		
					10	JP	22-7-77	SEE REVISION LIST		
					9	JD	23-9-76	SEE REVISION LIST	8/10	[illegible]
					8	JGY	03-6-76	APPROVED FOR CONSTRUCTION	16/6	PJ
					7	JP	25-5-76	ISSUED FOR CLIENT APPROVAL	8/6	PJ
					6	JP	27-4-76	ISSUED FOR PINK PRINT		

APPROVED: Tony Dawson for MCDERMOTT — HUDSON DATE: 4 June 76

ENGINEERS APPROVAL

	NO. IN SHT	BY	DATE
PROCESS		PJ	8/6
STRUCTURAL			
PIPING	NIL		2-6-76
MECHANICAL	NIL		2-6-76
ELECTRICAL	NIL		2-6-76
INSTRUMENT	[illegible]		[illegible]
FAB. STDS.			
PROJ. CONT.			

CLIENT APPROVAL gmt 09.6.76

ELF - NORGE
FRIGG FIELD

TREATMENT / COMPRESSION PLATFORM No.2

NORTH SEA JOB 1-40-E2 WD. 104-M.

McDERMOTT — HUDSON
LONDON — ENGLAND

DRAWN BY J PARKER	SCALE NONE	DATE 27TH APRIL '76	DWG NO ELN 2169
DESIGNED BY A.B. WORSFOLD		ZONE No 00	SHEET NO C4010

PIPING AND INSTRUMENT DIAGRAM SCOTTISH SALES GAS HEADERS

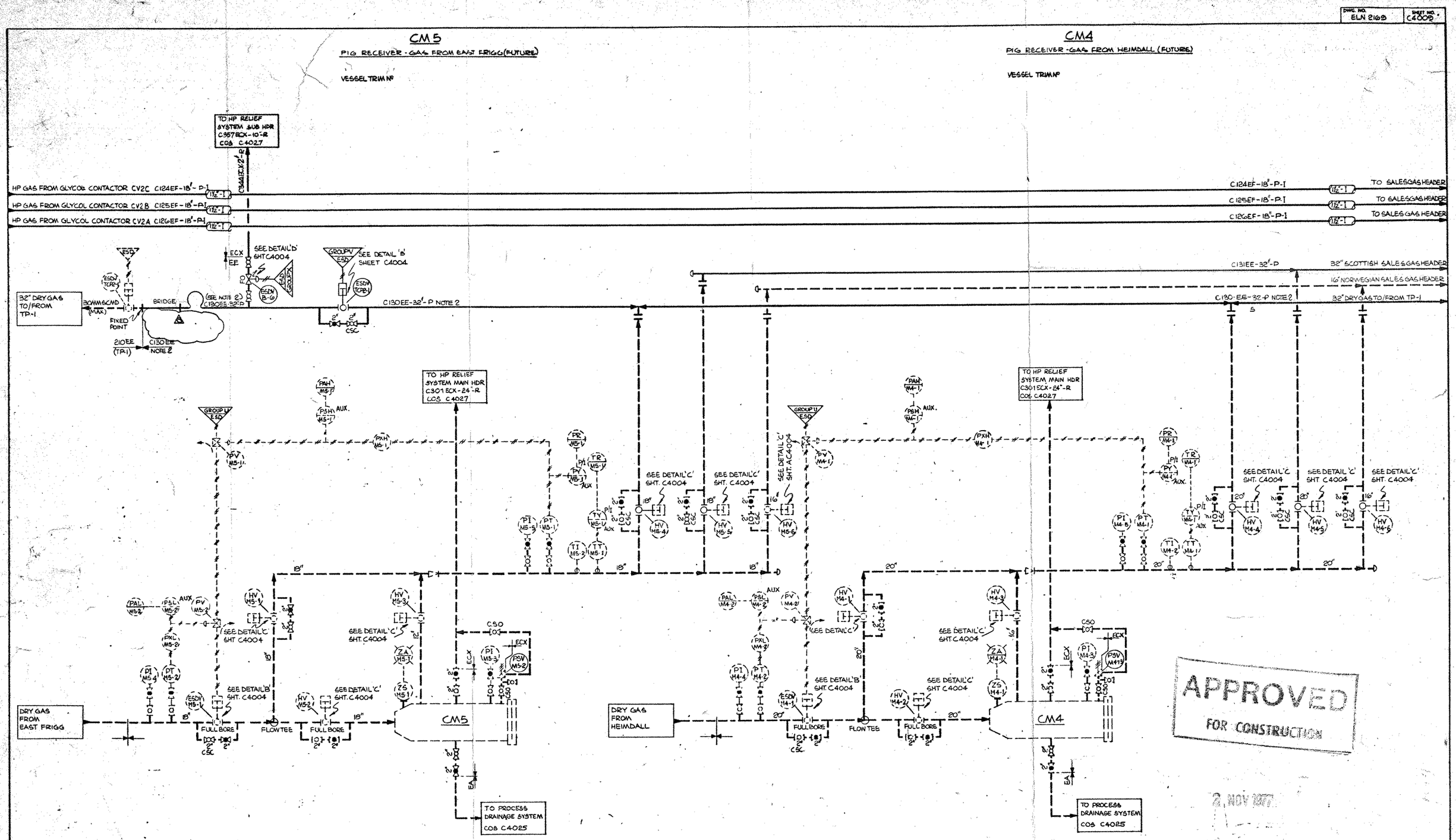

NOTES:-

1. ALL FUTURE LINE SIZES ARE ASSUMED AS NO PROCESS DATA IS AVAILABLE
2. SEE NOTE 7 ON 2169-COS C4010

NOTE. ALL INSTRUMENT & VALVE TAG Nos INCLUDE THE PREFIX LETTER 'C' EG PSH-CV2A-1

DESIGN	STRUCT	PIPING	ELEC	MK	BY	DATE	REVISIONS	DATE	APP
				8	LS	16-8-77	SEE REVISION LIST	8-7-77	
				7	RB	21-2-77	SEE REVISION LIST		
				6	JD	20-9-76	SEE REVISION LIST	21/10	
				5	JP	5-4-76	SEE REVISION LIST	28/4	
				4	SAW	8-10-75	SEE REVISION LIST		
				3	JGY	24-2-75	SEE REVISION LIST	3-11-75	
				2	DJB	2-12-74	APPROVED FOR CONSTRUCTION	3.10.74	
				1	CB	7-11-74	ISSUED FOR CLIENT APPROVAL	9.11.74	
				0	JGY	8-10-74	PRELIMINARY		

FAB. STDS. REQ'D. THIS SHT.

ELF-NORGE
FRIGG FIELD

TREATMENT / COMPRESSION PLATFORM No.2

NORTH SEA JOB 1-40-E2 W.D. 104-M.

McDERMOTT - HUDSON
LONDON — ENGLAND

APPROVED: [signature] McDERMOTT — HUDSON DATE 4 1974
ENGINEERS APPROVAL

	BY	DATE
PROJECT	JW	14.11.74
STRUCTURAL		
PROCESS		
MECHANICAL		
ELECTRICAL		
INSTRUMENT		
FIRE CHECK		
PROP CHECK		

DRAWN BY	SCALE	DATE	DWG NO.
J G YOUNG	NONE	7TH OCT. 1974	ELN 2169
DESIGNED BY		00	SHEET NO. C4009

PIPING AND INSTRUMENT DIAGRAM
EAST FRIGG & HEIMDALL PIG RECEIVING TRAPS

DWG. NO. ELN 2169 | SHEET NO. C4008

CV2C

GLYCOL CONTACTOR

3.302 M.I.D x 8.534 MT-T (130° I.D. x 28'-0" T-T).
15 x 10^6 SCMD GAS (529.65 x 10^6 SCFD).
DESIGN: 172 BARS ABS. (2494 PSIA) AT 50°C (122°F)
OPERATING: 160-140 BARS ABS. (2320-2030 PSIA) AT 30°C TO 50°C (86°F TO 122°F)
VESSEL TRIM No C127EF-P

CE2C

GLYCOL AIR COOLER

DUTY - 0.842 x 10^6 KCAL/HR (3.34 x 10^6 BTU/HR)
TUBESIDE FLOW - 255 L/MIN (67.4 U.S. GPM)
TUBESIDE TEMPS. - IN: 135°C (275°F)
-OUT: 49°C (120°F)
AIRSIDE TEMP. - IN: -9°C TO 21°C (16°F TO 71°F)

CV2B

GLYCOL CONTACTOR

3.302 M.I.D x 8.534 MT-T (130° I.D. x 28'-0" T-T).
15 x 10^6 SCMD GAS (529.65 x 10^6 SCFD).
DESIGN: 172 BARS ABS. (2494 PSIA) AT 50°C. (122°F)
OPERATING: 160-140 BARE ABS. (2320-2030 PSIA) AT 30°C TO 50°C (86°F TO 122°F)
VESSEL TRIM No C128EF-P

CE2B

GLYCOL AIR COOLER

DUTY - 0.842 x 10^6 KCAL/HR (3.34 x 10^6 BTU/HR)
TUBESIDE FLOW - 255 L/MIN (67.4 U.S. GPM)
TUBESIDE TEMPS - IN: 135°C (275°F)
- OUT: 49°C (120°F)
AIRSIDE TEMP. - IN: -9°C TO 21°C (16°F TO 71°F)

CV2A

GLYCOL CONTACTOR

3.302 M.I.D. x 8.534 MT-T (130° I.D. x 28'-0" T-T).
15 x 10^6 SCMD GAS (529.65 x 10^6 SCFD).
DESIGN: 172 BARS ABS. (2494 PSIA) AT 50°C. (122°F)
OPERATING: 160-140 BARS ABS. (2320-2030 PSIA) AT 30°C TO 50°C (86°F TO 122°F)
VESSEL TRIM No C129EF-P

CE 2A

GLYCOL AIR COOLER

DUTY - 0.842 x 10^6 KCAL/HR (3.34 x 10^6 BTU/HR)
TUBESIDE FLOW - 255 L/MIN (67.4 U.S. GPM)
TUBESIDE TEMPS - IN: 135°C (275°F)
- OUT: 49°C (120°F)
AIRSIDE TEMP. - IN: -9°C TO 21° (16°F TO 71 °F)

TO HP RELIEF SYSTEM SUB HDR C355 ECX-12"R COS C4027

TO HP RELIEF SYSTEM SUB-HDR C354 ECX-12"R COS C4027

TO HP RELIEF SYSTEM SUB-HDR C353 ECX-12"R COS C4027

COMPRESSION AREA FUEL GAS SYSTEM

HP GAS FROM CV1A/COMPRESSORS

HP GAS FROM CV1B/COMPRESSORS

HP GAS FROM CV1C/COMPRESSORS

C116EF-18"-P

C118EF-18"-P

C325 ECX-2"-R

C326ECX-2"R

C324ECX-2"R

C124EF_18"_P-1

C125EF_18"_P-1

C126EF_18"_P-1

1704EF-6"-FG

1705EF-6"-FG

1706EF-6"-FG

TO SALES GAS HEADERS

STOP PUMPS C.P10E & F & COOLER CE2C

STOP PUMPS C.P10C & D & COOLER CE2B

STOP PUMPS C.P10A & B & COOLER CE2A

SEE DETAIL 'D' SHEET C4004

TO CLOSE ESDV3 V1C-1,2,3,4 - COS C4006 ESDV3-V2C-1&2 COS C4008 ESDV-V2C-4 COS C4010

TO CLOSE ESDV3-V1B-1,2,3,4 - COS C4006; ESDV3-V2B-1&2 COS C4008 ESDV-V2B-4 COS C4010.

TO CLOSE ESDV3-V1A-1,2,3,&4 COS C4006 ESDV3-V2A-1&2 COS C4008 ESDV-V2A-4 COS C4010

CV2C

CV2B

CV2A

CE2C

CE2B

CE2A

FROM:- PSL-V1C-2A COS C4006; PSL-V2C-22A COS C4008; PSH-V2C-5 COS C4010

FROM:- PSL-V1B-2A COS C4006; PSL-V2B-22A COS C4008; PSH-V2B-5 COS C4010

FROM:- PSL-V1A-2A COS C4006; PSL-V2A-22A COS C4008; PSH-V2A-5 COS C4010

C560EF-3'-G-I

C561EF_3'_G.I

C562EF-3'-G-I

C563EF_3'_G.I

C564EF_3'_G.I

C565EF_3'_G.I

C557EF-1"-G-I

C558EF-1"-G-I

C559EF-1"-G-I

C516EA-3/4"-DR

C517EA-3/4"-DR

C518EA-3/4"-DR

C513EA-4"-DR

C514EA-4"-DR

C515EA-4"-DR

TO PROCESS DRAINAGE SYSTEM SUB-HDR C1452EA-4"DR COS C4025

FROM LSHH-V1C-3A COS C4018

FROM LSHH-V1B-3A COS C4017

FROM LSHH-V1A-3A COS C4016

FROM PSL-V1C-2A COS C4006; PSL-V2C-22A COS C4008; PSH-V2C-5 COS C4010

FROM PSL-V1B-2A COS C4006; PSL-V2B-22A COS C4008; PSH-V2B-5 COS C4010

FROM PSL-V1A-2A COS C4006; PSL-V2A-22A COS C4008; PSH-V2A-5 COS C4010

ELECTRIC TRACE

C551EF_3'_G.I — LEAN GLYCOL

C554EF_2'_G.I — RICH GLYCOL

C552EF_3'_G.I — LEAN GLYCOL

C555EF_2'_G.I — RICH GLYCOL

C561EF-3'-G-I — LEAN GLYCOL

C554EF-2'-G-I — RICH GLYCOL

C556EF-2'-G-I — RICH GLYCOL

C552EF-3'-G-I — LEAN GLYCOL

C555EF-2'-G-I — RICH GLYCOL

TO/FROM GLYCOL REGENERATION UNIT CQ1A COS C4016

TO/FROM GLYCOL REGENERATION UNIT CQ1B COS C4017

TO/FROM GLYCOL REGENERATION UNIT CQ1C COS C4018

NOTES:-

1) THESE TEST GAUGES (NOT TAGGED) ARE USED AT START UP FOR SETTING CHOKES CSP-5B1, 12, & 13.
2) COOLER CE2C IS ALSO STOPPED BY PSL-V1C-2A, PSL-V2C-22A, PSH-V2C-5.
3) COOLER CE2B IS ALSO STOPPED BY PSL-V1B-2A, PSL-V2B-22A, PSH-V2B-5.
4) COOLER CE2A IS ALSO STOPPED BY PSL-V1A-2A, PSL-V2A-22A PSH-V2A-5.

APPROVED FOR CONSTRUCTION

2 NOV 1977

NOTE:- ALL INSTRUMENT AND VALVE TAG Nos INCLUDE THE PREFIX LETTER 'C' EG. PSH-CV2A-1

DESIGN	STRUCT	PIPING	ELEC	MK	BY	DATE	REVISIONS
				8	L.S	16-8-77	SEE REVISION LIST
				7	JD	21-2-77	SEE REVISION LIST
				6	DL	20-9-76	SEE REVISION LIST
				5	JP	15-4-76	SEE REVISION LIST
				4	SAW	8-10-75	SEE REVISION LIST
				3	JGY	24-2-75	SEE REVISION LIST
				2	DJB	21-2-74	APPROVED FOR CONSTRUCTION
				1	ARW	7-11-74	ISSUED FOR CLIENT APPROVAL
				0	ARW	4-10-74	PRELIMINARY

FAB. STDS. REQ'D THIS SHT.

CUSTOMER APPROVAL

ELF - NORGE
FRIGG FIELD

TREATMENT / COMPRESSION PLATFORM No.2
NORTH SEA JOB 1-40-E2 W.D. 104-M.

McDERMOTT - HUDSON
LONDON - ENGLAND

APPROVED Tony Ramsell for McDermott - Hudson Int. Nov 14 1974 ENGINEERS APPROVAL

	BY	DATE
PROJECT		
STRUCTURAL		
PROCESS		
MECHANICAL		
ELECTRICAL		
INSTRUMENT		
PIPE STRESS		
PROP. COST		

DRAWN BY A.R. WALLACE | SCALE NONE | DATE 5TH AUG '74
DESIGNED BY | ZONE NO 00 | DWG. NO ELN 2169
UNIT NO C4008

PIPING AND INSTRUMENT DIAGRAM GLYCOL CONTACTORS

A

B & K LTD. 2557

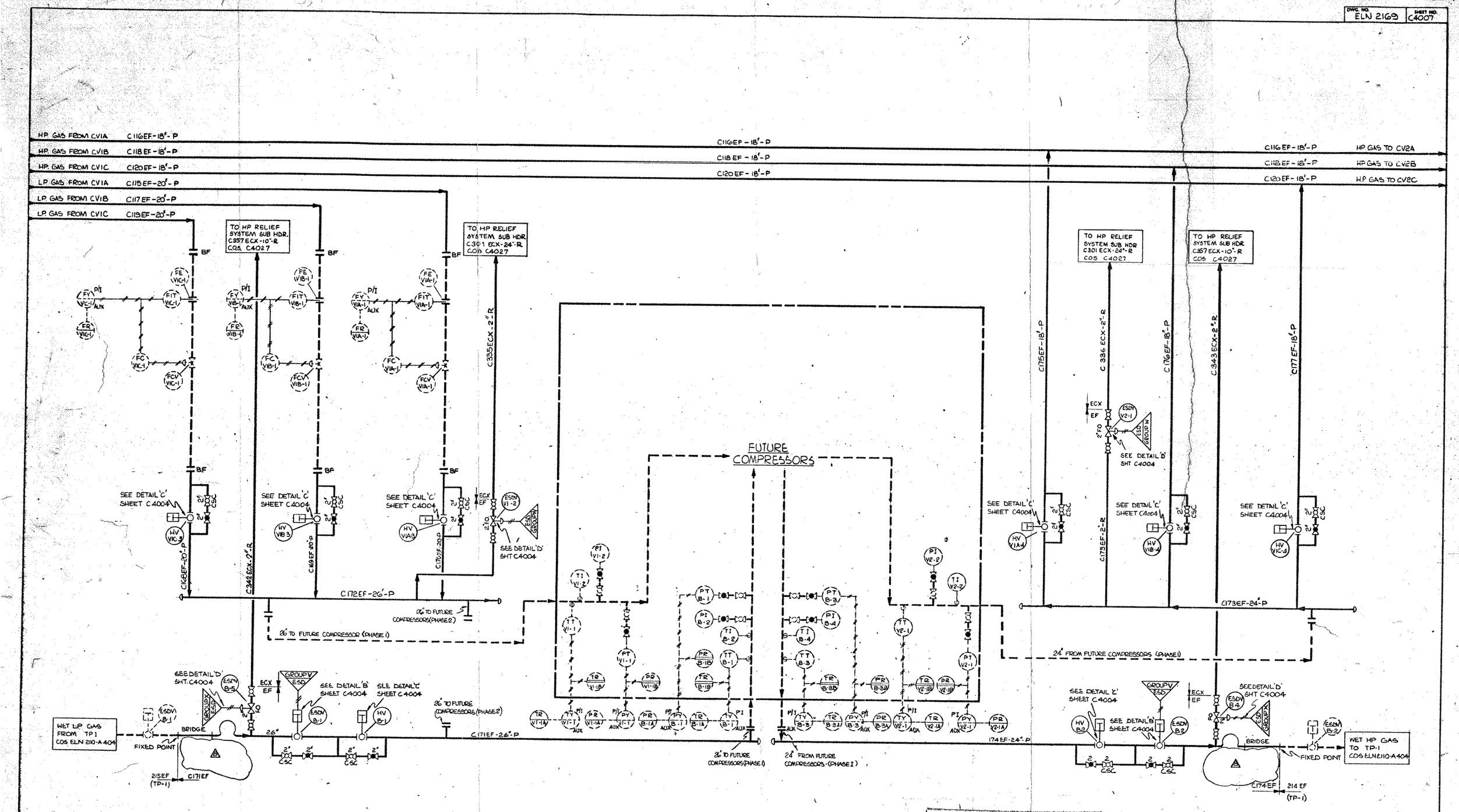

NOTE :- ALL INSTRUMENT AND VALVE TAG Nos INCLUDE THE PREFIX LETTER 'C' E.G. PSH-CV2A-1

DESIGN	STRUCT	PIPING	ELEC	MK	BY	DATE	REVISIONS	DATE	APP.
				8	LS	16-8-77	SEE REVISION LIST	2-9-77	

DESIGN	STRUCT	PIPING	ELEC	MK	BY	DATE	REVISIONS	DATE	APP.
				7	DL	21/2/77	SEE REVISION LIST		
				6	DL	20-9-76	SEE REVISION LIST	21/10	
				5	JP	9-4-76	SEE REVISION LIST	28/4	
				4	SAM	7-10-75	SEE REVISION LIST		

DESIGN	STRUCT	PIPING	ELEC	MK	BY	DATE	REVISIONS	DATE	APP.
				3	JL	24-2-75	SEE REVISION LIST	3-11-75	
				2	DJB	21-2-74	APPROVED FOR CONSTRUCTION	8-12-74	
				1	CB	6/11/74	ISSUED FOR CLIENT APPROVAL	14-11-74	
				0	CB	23-10-74	PRELIMINARY.		

CUSTOMER APPROVAL

APPROVED Tony Oomen
McDERMOTT — HUDSON
DATE Nov. 14 1974
ENGINEERS APPROVAL

	BY	DATE
PROJECT		
STRUCTURAL		
PROCESS		
MECHANICAL		
ELECTRICAL		
INSTRUMENT		
PAR. CHECK		
PROP. CHECK		

ELF-NORGE
FRIGG FIELD

TREATMENT / COMPRESSION PLATFORM No.2

NORTH SEA JOB 1-40-E2 W.D. 104-M.

McDERMOTT – HUDSON
LONDON — ENGLAND

DRAWN BY	SCALE	DATE	DWG NO
C BALL	NONE	23RD OCT. 1974	ELN 2169
DESIGNED BY		ZONE NO	SHEET NO
		00	C4007

PIPING & INSTRUMENT DIAGRAM
TIE-IN LINES TO COMPRESSOR PACKAGE

DWG NO. ELN2169 | SHEET NO. C4006

CV1A
FWKO SEPARATOR
2·388M I.D. x 9·144M T-T (94"I.D. x 30'-0"T-T)
CAPACITY: 15 x 10⁶ SCMD GAS (529·65 x 10⁶ SCFD)
DESIGN: 172 BARS ABS (2494 PSIA) AT 50°C (122°F)
OPERATING: 70-160 BARS ABS (1015-2030 PSIA) AT 30-50°C (86-122°F)
VESSEL TRIM Nº C121EF_P

CV1B
FWKO SEPARATOR
2·388M I.D. x 9·144M T-T (94"I.D. x 30'-0"T-T)
CAPACITY : 15 x 10⁶ SCMD GAS (529·65 x 10⁶ SCMD)
DESIGN : 172 BARS ABS (2494 PSIA) AT 50°C (122°F)
OPERATING : 70-160 BARS ABS (1015-2030 PSIA) AT 30-50°C (86-122°F)
VESSEL TRIM Nº C122EF_P

CV1C
FWKO SEPARATOR
2·388M I.D. x 9·144M T-T (94"I.D. x 30'-0"T-T)
CAPACITY : 15 x 10⁶ SCMD GAS (529·65 x 10⁶ SCMD)
DESIGN : 172 BARS ABS (2494 PSIA) AT 50°C (122°F)
OPERATING: 70-160 BARS ABS (1015-2030 PSIA) AT 30-50°C (86-122°F)
VESSEL TRIM Nº C123EF_P

TO H.P. RELIEF SUB HEADER C356ECX-8"-R COS C4027
TO H.P. RELIEF HEADER C301ECX-24"-R COS. C4027
C353ECX-12"-R
TO H.P. RELIEF HEADER C301ECX-24"-R COS. C4027
C354ECX-12"-R
TO H.P. RELIEF HEADER C301 ECX-24"-R COS. C4027
C355ECX-12"-R
WET GAS FROM DP-2
C101EF_26"_P
C106EF_26"_P
C110 EF_18"_P — HP GAS TO CV2A
C118EF_18"_P — HP GAS TO CV2B
C315ECX_2"-R — HP GAS TO CV2C
C115EF_20"_P — LP GAS TO COMPRESSORS
C117EF_20"_P — LP GAS TO COMPRESSORS
LP GAS TO COMPRESSORS
C104EF_26"_P INLET GAS HEADER
C112EF_20"_P
C114EF_20"_P
C119EF_20"_P
C120EF_16"_P
C310ECX-2"-R
C360ECX-4"-R
C361ECX-4"-R
C311ECX-2"-R
C362ECX-4"-R
C363ECX-4"-R
C312ECX-2"-R
C364ECX-4"-R
C365ECX-4"-R
C313ECX-2"-R
C316ECX-2"-R
C317ECX-2"-R
C318ECX-2"-R
C113EF_20"_P
C117EF_20"_P
C114EF_20"_P
C119EF_20"_P
C123EF-2"-P
C112EF_20"_P
C115EF_20"_P
C102EF_10"-HD
C103EF_10"-HD
C104EF_10"-HD
C105EF_2"-HD
C106EF_2"-HD
C107EF_2"-HD
C705EF-2"-HD
C706EF-2"-HD
C707EF-2"-HD
C702EF-10"-HD
C704EF-10"-HD
C701EF-12"-HD HYDROCARBON DUMP HEADER
C701EF_12"_HD
C510EA-¾"-DR
C511EA-¾"-DR
C512EA-¾"-DR
C504EA_4"_DR
C505EA_4"_DR
C506EA_4"_DR
C507EA_4"_DR
C508EA_4"_DR
C509EA_4"_DR
C510EA-¾"-DR
C511EA-¾"-DR
C512EA-¾"-DR
C513EF-2"-HD
C514EF-2"-HD
C515EF-2"-HD
C516EF-2"-HD
C517EF-2"-HD
C518EF-2"-HD
C519EF-2"-HD
C520EF-2"-HD
C521EF-2"-HD
C522EF-2"-HD
C523EF-2"-HD
C524EF-2"-HD
C525EF-2"-HD
C526EF-2"-HD
C527EF-2"-HD
C528EF-2"-HD
C529EF-2"-HD
C530EF-2"-HD
C531EF-2"-HD
C532EF-2"-HD
C533EF-2"-HD
C534EF-2"-HD
C535EF-2"-HD
C536EF-2"-HD
C537EF-2"-HD
C538EF-2"-HD
C539EF-2"-HD
C540EF-2"-HD
C541EF-2"-HD
C542EF-2"-HD
C543EF-2"-HD
C544EF-2"-HD
C545EF-2"-HD
C546EF-2"-HD
C547EF-2"-HD
C548EF-2"-HD
C549EF-2"-HD
C550EF-2"-HD
C551EF-2"-HD
C552EF-2"-HD

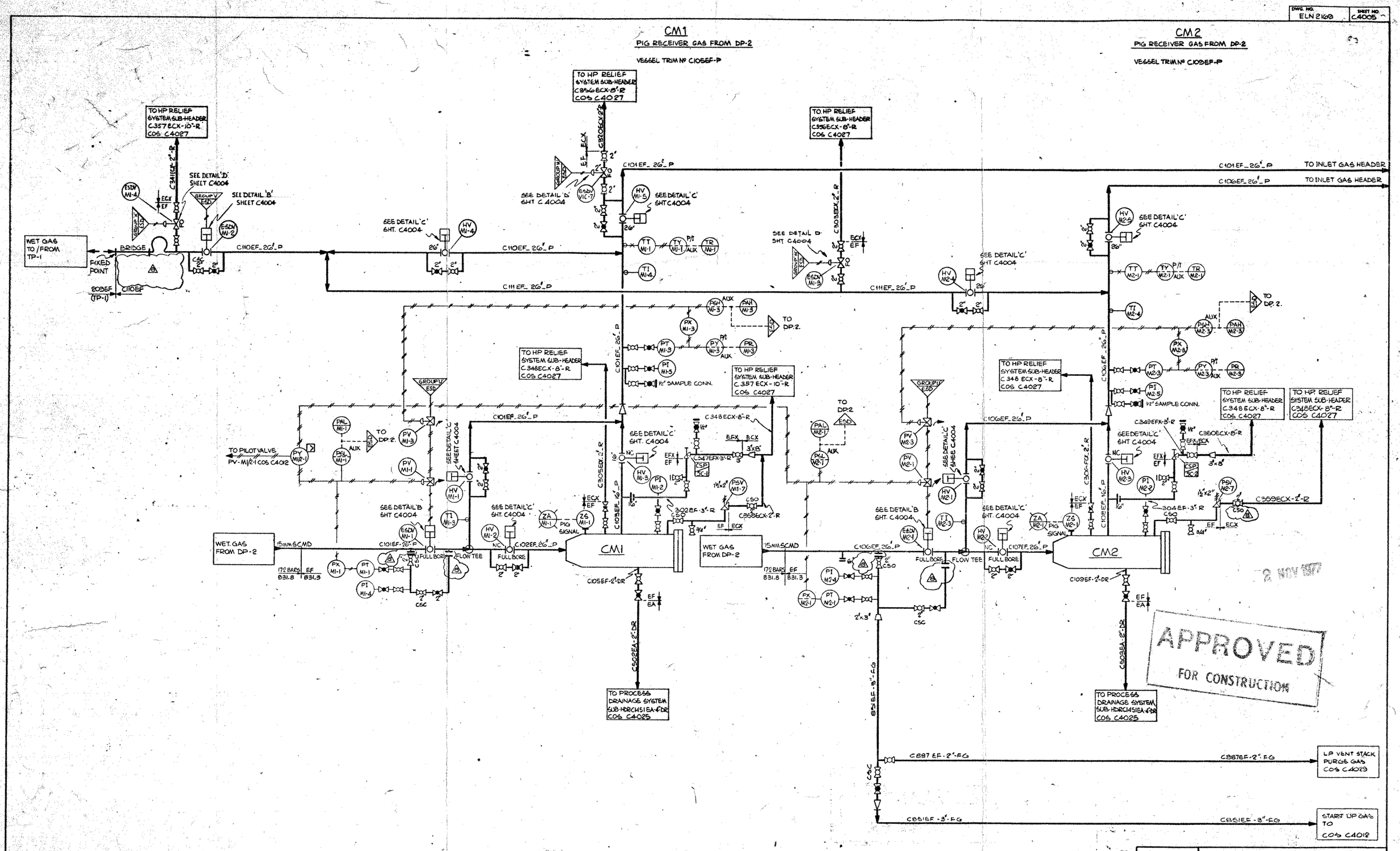

NOTE :-
ALL INSTRUMENT AND VALVE TAG Nºs INCLUDE THE PREFIX LETTER 'C' E.G. PSH-CV2A-1

DESIGN	STRUCT	PIPING	ELEC	MK	BY	DATE	REVISIONS	DATE	APP
				7	DL	21/2/77	SEE REVISION LIST		
				6	JA	20-3-76	SEE REVISION LIST	24/10	
				5	BW	9-4-76	SEE REVISION LIST	20/4	
				4	JGY	29-3-76	SEE REVISION LIST		
				3	TRC	24-2-75	SEE REVISION LIST	3/11	
				2	DJB	2-12-74	APPROVED FOR CONSTRUCTION	3.12.74	
				1	ABW	6-11-74	ISSUED FOR CLIENT APPROVAL	16.11.74	
				0	JGY	22-10-74	PRELIMINARY		

FAB. STDS. REQ'D. THIS SHT.

DESIGN	STRUCT	PIPING	ELEC	MK	BY	DATE	REVISIONS	DATE	APP
				R	RB	10-8-71	SEE REVISION LIST	4-4-71	

CUSTOMER APPROVAL
BY: [signature]
DATE: 3/12/74

APPROVED: [signature]
McDERMOTT – HUDSON
DATE: Nov. 14 1974

ENGINEERS APPROVAL

	BY	DATE
PROJECT		16-11-74
STRUCTURAL		
PROCESS		16-11-74
MECHANICAL		16-11-74
ELECTRICAL		16-11-74
INSTRUMENT		16/11/74
FAB. CHECK		
PROP. CHECK		

ELF – NORGE
FRIGG FIELD
TREATMENT / COMPRESSION PLATFORM No.2
NORTH SEA JOB 1-40-E2 W.D. 104-M.

McDERMOTT – HUDSON
LONDON — ENGLAND

DRAWN BY	SCALE	DATE	DWG. NO.
J.G. YOUNG	NONE	3RD OCT 1974	ELN 2169
DESIGNED BY		ZONE NO.	SHEET NO.
A.B. Wood		00	C4005

PIPING AND INSTRUMENT DIAGRAM
SPHERICAL PIG RECEIVERS

DWG. NO. ELN 2169 | SHEET NO. C4004

P&ID FLOW DIAGRAM INDEX

DRAWING NR	TITLE OF FLOWSHEET
ELN 2169 - C4000	
ELN 2169 - C4001	
ELN 2169 - C4002	
ELN 2169 - C4003	LEGEND FOR PIPING AND INSTRUMENT DIAGRAMS SHEET Nº1
ELN 2169 - C4004	LEGEND AND TYPICAL DETAILS FOR PIPING AND INSTRUMENT DIAGRAMS SHEET Nº2
ELN 2169 - C4005	SPHERICAL PIG RECEIVERS
ELN 2169 - C4006	FWKO SEPARATORS
ELN 2169 - C4007	TIE-IN LINES TO COMPRESSOR PACKAGE
ELN 2169 - C4008	GLYCOL CONTACTORS
ELN 2169 - C4009	EAST FRIGG & HEIMDALL PIG RECEIVING TRAPS
ELN 2169 - C4010	SCOTTISH GAILES GAS METERING
ELN 2169 - C4011	SCOTTISH & NORWEGIAN PIG LAUNCHERS
ELN 2169 - C4012	FUEL GAS & METHANOL SYSTEMS
ELN 2169 - C4013	CONDENSATE RECOVERY SYSTEM
ELN 2169 - C4014	CONDENSATE STORAGE SYSTEM
ELN 2169 - C4015	CONDENSATE STORAGE SYSTEM
ELN 2169 - C4016	GLYCOL REGENERATION UNIT
ELN 2169 - C4017	GLYCOL STORAGE & REGENERATION UNIT
ELN 2169 - C4018	GLYCOL REGENERATION UNIT
ELN 2169 - C4019	INSTRUMENT & UTILITY AIR COMPRESSOR PACKAGE
ELN 2169 - C4020	DIESEL, MUD, UTILITY WATER
ELN 2169 - C4021	FIREWATER PUMPS
ELN 2169 - C4022	CANCELLED
ELN 2169 - C4023	CANCELLED
ELN 2169 - C4024	PROCESS DATA FLOWSHEET FOR CONDENSATE STORAGE SYSTEM
ELN 2169 - C4025	PROCESS DRAINAGE SYSTEM
ELN 2169 - C4026	DECK DRAINAGE SYSTEM
ELN 2169 - C4027	H.P. RELIEF SYSTEM
ELN 2169 - C4028	ELECTRICAL GENERATION SYSTEM
ELN 2169 - C4029	LOW PRESSURE VENT & SYSTEM
ELN 2169 - C4030	LINE LISTS
ELN 2169 - C4031	HYDRAULIC SYSTEM
ELN 2169 - C4032	HYDRAULIC SYSTEM
ELN 2169 - C4033	HYDRAULIC SYSTEM
ELN 2169 - C4034	INSTRUMENT & PLANT AIR HEADERS
ELN 2169 - C4035	HYDRAULIC SYSTEM
ELN 2169 - C4036	FIREWATER SYSTEMS (CELLAR DECK)
ELN 2169 - C4037	FIREWATER SYSTEMS (MAIN & UPPER DECK)
ELN 2169 - C4038	FIREWATER SYSTEMS (MAIN & UPPER DECK)
ELN 2169 - C4039	TEMPORARY LIVING QUARTERS (MODULES 7A & 7G)

(TYPICAL) GROUP ESD

NOTE

THIS GROUPING IS PART OF THE EMERGENCY SHUTDOWN CONTROL AND FOR CONTINUATION REFER TO THE FOLLOWING TABLE :-

GROUP A REFER TO DWG ELN2169-7052	GROUP B REFER TO DWG ELN2169-7053	GROUP C REFER TO DWG ELN2169-7054	GROUP U REFER TO DWG ELN2169-7055 & 6	GROUP V REFER TO DWG ELN2169-7057	GROUP W REFER TO DWG ELN 2169-7058 & 7059			GROUP X REFER TO DWG ELN2169-7060
ESDV-V1A-1	ESDV-V1B-1	ESDV-V1C-1	ESDV-M1-1	ESDV-M1-2	ESDV-V1A-5	ESDV-V2C-8	ESDV-V2C-7	ESDV-M1-4
ESDV-V1A-2	ESDV-V1B-2	ESDV-V1C-2	ESDV-M2-1	ESDV-B-1	ESDV-V1A-6	ESDV-V1-2	ESDV-V2C-6	ESDV-B-5
ESDV-V1A-3	ESDV-V1B-3	ESDV-V1C-3	ESDV-M3-1	ESDV-B-2	ESDV-V2A-8	ESDV-V2A-3	PCV-V3-3	ESDV-B-4
ESDV-V1A-4	ESDV-V1B-4	ESDV-V1C-4	ESDV-M4-1 ⊕	ESDV-B-3	ESDV-V1B-5	ESDV-V2B-3	PCV-V3-4	ESDV-B-6
ESDV-V2A-1	ESDV-V2B-1	ESDV-V2C-1	ESDV-M5-1 ⊕	ESDV-TCP2-1	ESDV-V1B-6	ESDV-V2C-3	ESDV-V1C-7	
ESDV-V2A-2	ESDV-V2B-2	ESDV-V2C-2	ESDV-M9-2	ESDV-B7 &	ESDV-V2B-8	ESDV-V2-1		
ESDV-V2A-4	ESDV-V2B-4	ESDV-V2C-4	ESDV-M3-1 ⊕		ESDV-V1C-5	ESDV-M1-3		
					ESDV-V1C-6	ESDV-M2-3		

⊕ THESE VALVES ARE FUTURE

VESSELS

ITEM No.	EQUIPMENT	DWG. No.
CV1-A,B,&C	FWKO SEPARATORS	C4006
CV2-A,B,&C	GLYCOL CONTACTORS	C4008
CV3	CONDENSATE SURGE VESSEL	C4013
CV4-A&B	COALESCERS	C4014
CV5	OIL SKIMMER	C4014
CV6	FUEL GAS SCRUBBER	C4012
CV7	LP VENT SCRUBBER	C4029
CV8	NOT USED	—
CV9	GLYCOL STORAGE TANK	C4017
CV10	DIESEL STORAGE TANK	C4020
CV11A&B	FIREWATER PUMPS DIESEL DAY TANKS	C4020
CV12	NOT USED	—
CV13	SUMP CAISSON	C4026
CV14A	CONDENSATE SEPARATOR	C4016
CV14B	CONDENSATE SEPARATOR	C4017
CV14C	CONDENSATE SEPARATOR	C4018
CV15A	GLYCOL FILTER	C4016
CV15B	GLYCOL FILTER	C4017
CV15C	GLYCOL FILTER	C4018
CV16A	GLYCOL STRIPPING COLUMN	C4016
CV16B	GLYCOL STRIPPING COLUMN	C4017
CV16C	GLYCOL STRIPPING COLUMN	C4018
CV17A	GLYCOL SURGE TANK	C4016
CV17B	GLYCOL SURGE TANK	C4017
CV17C	GLYCOL SURGE TANK	C4018
CV18A	TURBINE GAS DEMISTER	C4028
CV18B	TURBINE GAS DEMISTER	C4028
CV18C	TURBINE GAS DEMISTER	C4028
CV19A	GLYCOL PULSATION DAMPENER	C4016
CV19B	GLYCOL PULSATION DAMPENER	C4016
CV19C	GLYCOL PULSATION DAMPENER	C4017
CV19D	GLYCOL PULSATION DAMPENER	C4017
CV19E	GLYCOL PULSATION DAMPENER	C4018
CV19F	GLYCOL PULSATION DAMPENER	C4018
CV20A	CHARCOAL FILTER	C4016
CV20B	CHARCOAL FILTER	C4017
CV20C	CHARCOAL FILTER	C4018
CV21	DIESEL FILTER	C4020
CV22	NOT USED	—
CV23	METHANOL STORAGE TANK	C4012
CV24	H.P. RELIEF SCRUBBER	C4027
CV25	NOT USED	—
CV26	NOT USED	—
CV27	NOT USED	—
CV28	NOT USED	—
CV29A,B&C	CONDENSATE PULSATION DAMPENERS	C4013
CV30A&B	SLOPS OIL PULSATION DAMPENERS	C4014
CV31	GLYCOL CHARCOAL FILTER	C4016
CV32 A&B	METHANOL PULSATION DAMPENERS	C4012
CV33	CONDENSATE RECYCLE TANK	C4014
CV34 A&B	AIR RECEIVERS	C4021
CV35 A&B	AIR INLET FILTERS	C4013
CV36 A&B	AIR RECEIVERS	C4019
CV37 A TO D	AIR DRIERS	C4013
CV38	CONDENSATE STORAGE TANK	C4015
CV39 A&B	AIR PULSATION DAMPENERS	C4013
CV40	NOT USED	—
CV41 A&B	MOISTURE PRE FILTERS	C4013
CV42	HYDRAULIC FLUID TANK	C4032
CV43 A&B	DUST FILTERS	C4013
CV44	AIR RECEIVER	C4028

EQUIPMENT LOCATION LIST

PUMPS

ITEM No.	EQUIPMENT	DWG. No
CP1A & B	CONDENSATE BOOSTER PUMPS	C4013
CP2AB&C	CONDENSATE RETURN PUMPS	C4013
CP3	WASTE OIL SUMP PUMP	C4026
CP4A & B	NOT USED	—
CP5A & B	NOT USED	—
CP6A & B	FIREWATER PUMPS	C4021
CP7	WASHDOWN PUMP	C4021
CP8A & B	DIESEL PUMPS	C4020
CP9A & B	SLOPS OIL PUMPS	C4014
CP10A & B	GLYCOL PUMPS	C4016
CP10C & D	GLYCOL PUMPS	C4017
CP10E & F	GLYCOL PUMPS	C4018
CP11A & B	NOT USED	—
CP12A & B	METHANOL INJECTION PUMPS	C4012
CP13A & B	GLYCOL FILL PUMPS	C4017
CP14A & B	GLYCOL INJECTION PUMPS	C4016
CP15A&B	CONDENSATE RECYCLE PUMP	C4014
CP16 A&B	WATER CURTAIN PUMPS	C4015
CP17 A&B	METHANOL TRANSFER PUMPS	C4012
CP 18 A&B	LUBE OIL PUMPS	C4019
CP 19 A&B	COOLING WATER PUMPS	C4019
CP 20A	CONDENSATE &TORAGE PUMPS	C4015
CP 21	OILY WATER PUMP	C4015
CP 22 A&B	HYDRAULIC OIL PUMPS	C4032

MISCELLANEOUS EQUIPMENT

ITEM No.	EQUIPMENT	DWG NO
CM1	PIG RECEIVER - GAS FROM DP-2	C4005
CM2	PIG RECEIVER - GAS FROM DP-2	C4005
CM3	PIG LAUNCHER - GAS TO SCOTLAND	C4011
CM4	PIG RECEIVER - GAS FROM HEIMDALL (FUTURE)	C4009
CM5	PIG RECEIVER - GAS FROM E. FRIGG (FUTURE)	C4009
CM6	PIG RECEIVER (FUTURE)	——
CM7	CRANE	C4020
CM8	CRANE	C4020
CM9	PIG RECEIVER - CONDENSATE FROM DP-2	C4012
CM10	NOT USED	——
CM11	NOT USED	——
CM12	PIG RECEIVER (FUTURE)	——
CM13	PIG LAUNCHER - GAS TO NORWAY (FUTURE)	C4011
CM14	COVERED LIFE BOAT	——
CM15	OPEN LAUNCH	——
CM16A/B	MANUAL HOISTS (PUMP HOUSE) 10 TON	——
CM17A&B	CONDENSATE BURNER BOOMS	C4015
CM18	ELECTRIC HOIST (WORK SHOP STORE) 5 TON	——
CM19	MANUAL HOIST (WORK SHOP) 5 TON	——
CM20	MANUAL HOIST (INSTR. INTERFACE ROOM) 1 TON	——
CM21	MANUAL HOIST (OVER PIGS) 3 TON	——
CM22	FORK LIFT TRUCK	——
CM23	ENZYME FEEDER (PART OF CQ13)	——
CM24	MANUAL HOIST (TURBINE HALL) 10 TON	——
CM25	MANUAL HOIST (H&V ROOM) 5 TON	——

HEAT EXCHANGERS

ITEM No.	EQUIPMENT	DWG. No.
CE1A -1&2	GLYCOL EXCHANGER	C4016
CE1B-1&2	GLYCOL EXCHANGER	C4017
CE1C -1&2	GLYCOL EXCHANGER	C4018
CE2-A,B&C	GLYCOL AIR COOLERS	C4008
CE3	FUEL GAS HEAT EXCHANGER	C4012
CE4-A	REFLUX CONDENSER	C4016
CE4-B	REFLUX CONDENSER	C4017
CE4-C	REFLUX CONDENSER	C4018
CE 5A&B	AIR COOLERS	C4019
CE 6A&B	INTER STAGE AIR COOLERS	C4019

HEATERS

CH1-A	GLYCOL REBOILER	C4016
CH1-B	GLYCOL REBOILER	C4017
CH1-C	GLYCOL REBOILER	C4018

COMPRESSORS

CC1A&B	AIR COMPRESSORS	C4019
CC 2	BLOWER (PART OF CQ13)	

PACKAGED EQUIPMENT

CQ1-A	GLYCOL REGENERATION UNIT	C4016
CQ1-B	GLYCOL REGENERATION UNIT	C4017
CQ1-C	GLYCOL REGENERATION UNIT	C4018
CQ2	NOT USED	—
CQ3	GAS TURBINE GENERATOR PKGE	C4028
CQ4	FIRE DETECTION & EXTINGUISING SYSTEM	C4028
CQ5 A&B	INSTRUMENT & UTILITY AIR COMP. PKGE	C4019
CQ6	NOT USED	—
CQ7	CENTRAL HYDRAULIC POWER UNIT	C4032
CQ8A (&B FUTURE)	LOCAL CONTROL STATION FOR PIGS	C4011/C4032
CQ9	AIR CONDITIONING UNIT	C4028
CQ10	NOT USED	—
CQ11	WORKSHOP & STORAGE VENT/PRESS. PKGE	——
CQ12A&B	FIREWATER PUMP HOUSE VENT/PRESS PKGES	——
CQ13	SEWAGE TREATMENT PLANT	C4025

PIPING SPECIALITIES (* BY INSTRUMENT DEPT.)

ITEM No.	EQUIPMENT	P&ID No
CSP-1	BUBBLE CAP TRAYS	C4008
CSP-2	MIST EXTRACTOR	C4008
CSP-3	NOT USED	——
CSP-4	AIR FILTER, LUBRICATOR & REGULATOR	C4019
CSP-5A1*	CHOKE VALVE	C4006
CSP-5A2*	CHOKE VALVE	C4006
CSP-5A3*	CHOKE VALVE	C4006
CSP-5B1*	CHOKE VALVE	C4008
CSP-5B2*	CHOKE VALVE	C4008
CSP-5B3*	CHOKE VALVE	C4008
CSP-5B4*	CHOKE VALVE	C4006
CSP-5B5*	CHOKE VALVE	C4006
CSP-5B6*	CHOKE VALVE	C4006
CSP-5C1*	CHOKE VALVE	C4005
CSP-5C2*	CHOKE VALVE	C4005
CSP-5D1*	CHOKE VALVE	C4010
CSP-5E1	CHOKE VALVE	C4013
CSP-5E2	CHOKE VALVE	C4013
CSP-6	NOT USED	——
CSP-7	NOT USED	——
CSP-8	NOT USED	——
CSP-9	NOT USED	——
CSP-10B	FLEXIBLE HOSE	C4020
CSP-10C	FLEXIBLE HOSE	C4034
CSP-10D	FLEXIBLE HOSE	C4020
CSP-10E	FLEXIBLE HOSE	C4012
CSP-10H	FLEXIBLE HOSE	C4017
CSP-10J	FLEXIBLE HOSE	C4019
CSP-10T	FLEXIBLE HOSE	C4015
CSP-11	NOT USED	——
CSP-12	NOT USED	——
CSP-13	NOT USED	——

PIPING SPECIALITIES

ITEM No.	EQUIPMENT	P&ID No
CSP 14A	'Y' TYPE STRAINERS	C4016
CSP 14B	'Y' TYPE STRAINERS	C4017
CSP 14C	'Y' TYPE STRAINERS	C4020
CSP 14D	'Y' TYPE STRAINERS	C4014
CSP 14E	'Y' TYPE STRAINERS	C4012
CSP 14F	'Y' TYPE STRAINERS	C4013
CSP 14G	'Y' TYPE STRAINERS	C4017
CSP 14H	'Y' TYPE STRAINERS	C4020
CSP 14H	'Y' TYPE STRAINERS	C4012
CSP 14J	'Y' TYPE STRAINERS	C4013
CSP 14J	'Y' TYPE STRAINERS	C4014
CSP 15A	'Y' TYPE STRAINERS	C4015
CSP 15A	'Y' TYPE STRAINERS	C4021
CSP 15B	'Y' TYPE STRAINERS	C4021
CSP 16A	VENT FILTER	C4020
CSP 16B	VENT FILTER	C4012
CSP 16C	VENT FILTER	C4019
CSP 16D	VENT FILTER	C4021
CSP 17	SILENCER	C4010
CSP 18	NOT USED	——
CSP 19	NOT USED	——
CSP 20	NOT USED	——
CSP 21	NOT USED	——
CSP 22	SPRINKLERS	C4036-38
CSP 23	NOT USED	——
CSP 24	INVERTED/LIGHT GAS SEAL	C4029
CSP 24-1	CANCELLED	——
CSP 26	CONDENSATE TRAP	C4027
CSP 27	CONDENSATE TRAP	C4027
CSP 28	CASING CENTRALISERS	——
CSP 29	NOT USED	——
CSP 30	STANDBY NITEOGEN BOTTLES	C 4028
CSP 34A	QUICK CONNECT HOSE SOCKETS	C4020/C4034
CSP 34B	QUICK CONNECT HOSE PLUGS	C4020/C4034
CSP 35	18/20" MANWAY ADAPTOR	——
CSP 36	HP VENT STACK	——
CSP 37	CHLORINE DOSING PIPING	——
CSP 38	VENT FILTER	C4039

2 NOV 1977

DETAIL 'F' (TYPICAL)

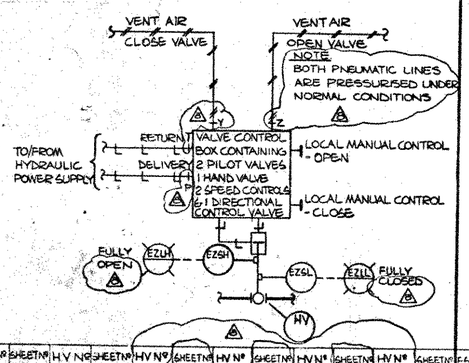

DETAIL 'B' (TYPICAL)

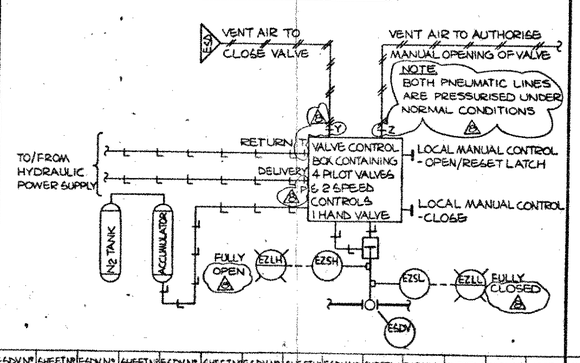

DETAIL 'C' (TYPICAL)

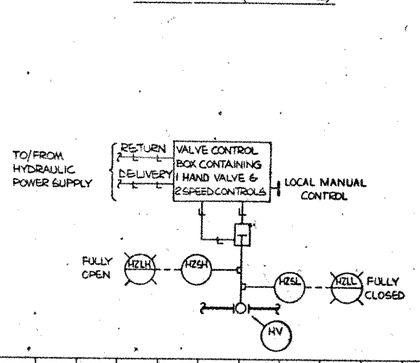

DETAIL 'D' (TYPICAL)

ESDV BLOWDOWN VALVE

NOTE CA-1 IS A COMMON ALARM FOR ALL BLOWDOWN (PRESSURE RELIEF) VALVES, TO INDICATE VALVE OPEN.

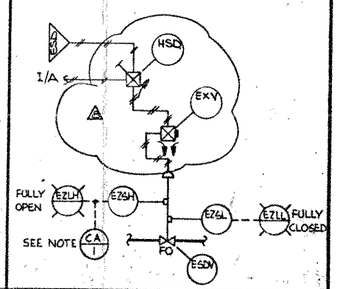

HV Nº	SHEET Nº	HV Nº	SHEET Nº	HV Nº	SHEET Nº	HV Nº	SHEET Nº	HV Nº	SHEET Nº	ESDV Nº	SHEET Nº	ESDV Nº	SHEET Nº	ESDV Nº	SHEET Nº	ESDV Nº	SHEET Nº	ESDV Nº	SHEET Nº	ESDV Nº	SHEET Nº	ESDV Nº	SHEET Nº
HV-V2A-4	C4010	HV-V2C-6	C4010							M1-1	C4005	V1A-1	C4006	V1C-1	C4006	V2B-1	C4008	B3	C4013				
HV-V2A-5	C4010									M1-2	C4005	V1A-2	C4006	V1C-2	C4006	V2B-2	C4008	B7	C4014				
HV-V2A-6	C4010									M2-1	C4005	V1A-3	C4006	V1C-3	C4006	V2C-1	C4008						
HV-V2B-5	C4010									M3-1	C4011	V1A-4	C4006	V1C-4	C4006	V2C-2	C4008						
HV-V2B-6	C4010									M4-1	C4009	V1B-1	C4006	B-1	C4007	TCP2-1	C4009						
HV-V2C-4	C4010									M5-1	C4009	V1B-2	C4006	B-2	C4007	V2A-4	C4010						
HV-V2C-5	C4010									M9-2	C4012	V1B-3	C4006	V2A-1	C4008	V2B-4	C4010						
										M13-1	C4011	V1B-4	C4006	V2A-2	C4008	V2C-4	C4010						

HV Nº	SHEET Nº	HV Nº	SHEET Nº	HV Nº	SHEET Nº	HV Nº	SHEET Nº	HV Nº	SHEET Nº	HV Nº	SHEET Nº	HV Nº	SHEET Nº	ESDV Nº	SHEET Nº	ESDV Nº	SHEET Nº	ESDV Nº	SHEET Nº	ESDV Nº	SHEET Nº	ESDV Nº	SHEET Nº
M1-1	C4005	M2-4	C4005	V1A-3	C4007	M4-2	C4009	M5-4	C4009	V2B-3	C4010			M1-3	C4005	V1C-6	C4006	V2-1	C4007				
M1-2	C4005	M2-5	C4005	V1B-3	C4007	M4-3	C4009	M5-5	C4009	V2C-1	C4010			M1-4	C4005	V1C-7	C4006	V2A-3	C4008				
M1-3	C4005	V1A-1	C4006	V1C-3	C4007	M4-4	C4009	M5-6	C4009	V2C-2	C4010			V1A-5	C4006	V2B-3	C4008						
M1-4	C4005	V1B-1	C4006	V1A-4	C4007	M4-5	C4009	V2A-1	C4010	V2C-3	C4010			V1A-6	C4006	M2-3	C4006	V2C-3	C4008				
M1-5	C4005	V1C-1	C4006	V1B-4	C4007	M4-6	C4009	V2A-2	C4010					V2A-8	C4006	B-5	C4007	B-6	C4009				
M2-1	C4005	M1-6	C4006	V1C-4	C4007	M5-1	C4009	V2A-3	C4010					V1B-5	C4006	B-4	C4007	V2C-7	C4010				
M2-2	C4005	M2-6	C4006	B-2	C4007	M5-2	C4009	V2B-1	C4010					V1B-6	C4006	V1-2	C4007	V2C-6	C4010				
M2-3	C4005	B-1	C4007	M4-1	C4009	M5-3	C4009	V2B-2	C4010					VIC-5	C4006	V2B-8	C4006						

FAB. STDS. REQ'D. THIS SHT.

DESIGN	STRUCT	PIPING	ELEC	ME	BY	DATE	REVISIONS	DATE	APP

IDENTIFICATION LETTERS FOR P&I

	FIRST LETTER	SECOND LETTER	THIRD LETTER	
	ANALYSIS	ALARM		
	BURNER FLAME			
	CONDUCTIVITY (ELECTRICAL)	CONTROL	CONTROL	
	DENSITY OR SPECIFIC GRAVITY	DIFFERENTIAL		
	VOLTAGE (EMF)	PRIMARY ELEMENT	PRIMARY ELEMENT	
	FLOW RATE	RATIO		
		GAUGE GLASS		
	HAND OR HYDRAULIC	HAND		
	CURRENT	INDICATE	HIGH	HIGH
	POWER	SCAN	INDICATE	
	TIME		SCAN	
	LEVEL	LIGHT (PILOT)	LOW	LOW
	MOISTURE		MIDDLE	MIDDLE
		ORIFICE (RESTRICTION)		
	PRESSURE OR VACUUM	POINT TEST CONNECTION		
	QUANTITY	INTEGRATOR	INTEGRATOR	
	RADIOACTIVITY	RECORD OR PRINT	RECORD OR PRINT	
	SPEED	SWITCH OR SAFETY	SWITCH	
	TEMPERATURE	TRANSMITTER	TRANSMITTER	
	MULTIVARIABLE	MULTIFUNCTION	MULTIFUNCTION	
	VISCOSITY	VALVE	VALVE	
	WEIGHT	WELL		
	UNCLASSIFIED	UNCLASSIFIED	UNCLASSIFIED	UNCLASSIFIED
		RELAY OR COMPUTE	RELAY OR COMPUTE	
	POSITION	POSITION		

NOTE ALL PROCESS MEASUREMENTS THAT ARE INDICATED OR RECORDED, ON THE MAIN PANEL ARE ALSO RECORDED BY THE COMPUTER.
INDICATES SIGNALS THAT ARE 'COMPUTER ONLY' INPUTS/OUTPUTS.

MISCELLANEOUS LETTER ABBREVIATIONS

ESDV - EMERGENCY SHUTDOWN VALVE
BSW - BASIC SEDIMENT & WATER
NC - NORMALLY CLOSED
NO - NORMALLY OPEN
IA - INSTRUMENT AIR SUPPLY
S/D - SHUTDOWN
LEL - LOWER EXPLOSIVE LIMIT
SP - SET POINT

FLA - FLAME ARRESTOR
LUB - LUBRICATOR
CSC - CAR SEAL CLOSED
CSO - CAR SEAL OPEN
STR - STRAINER
(VF) - VENDOR FURNISHED
(CF) - CUSTOMER FURNISHED
FM - FIRE MONITOR
HR - HOSE REEL
BF - BLIND FLANGE
RP - RODDING OUT POINT
LAT - LOWEST ASTRONOMICAL TIDE
DL - DECK LEVEL (SEE NOTE1 BELOW)

MISCELLANEOUS INSTRUMENT SYMBOLS

- CHEMICAL SEAL
- BOARD MOUNTED PATCHBOARD OR MATRIX BOARD CONNECTION, NUMBER 12
- PURGE OR FLUSHING DEVICE.
- GENERALISED - FOR UNDEFINED OR COMPLEX INTERLOCK LOGIC.
- INTERLOCK IS EFFECTIVE ONLY IF ALL INPUTS EXIST
- INTERLOCK IS EFFECTIVE IF ANY ONE OR MORE INPUTS EXIST.
- ALARM AND FIRE PUMP START STATION
- EMERGENCY SHUTDOWN STATION
- FROM EMERGENCY SHUTDOWN SYSTEM
- TO EMERGENCY SHUTDOWN SYSTEM.

INSTRUMENT BALLOON SYMBOLS

- LOCAL MOUNTED INSTRUMENT FOR SINGLE VARIABLE
- LOCAL BOARD MOUNTED INSTRUMENT
- INSTRUMENT MOUNTED BEHIND MAIN BOARD
- INSTRUMENT MOUNTED ON MAIN BOARD
- LOCALLY MOUNTED INSTRUMENT WITH TWO SERVICES
- AUX INSTRUMENT MOUNTED IN TCP2 INTERFACE ROOM
- PILOT LIGHT
- INSTRUMENT MOUNTED BEHIND LOCAL BOARD
- INSTRUMENT MOUNTED ON MIMIC PANEL

CHECK
NOTE:- PIPING DEPT SUPPLY INSTRUMENT LINE ISOLATION VALVES, INCLUDING DOUBLE VALVES WHERE SHOWN

CONTROL VALVE BODY SYMBOLS

- GLOBE, GATE, OR OTHER IN-LINE TYPE NOT OTHERWISE IDENTIFIED
- ROTARY PLUG OR BALL
- ANGLE
- BUTTERFLY, DAMPER OR LOUVRE
- THREE-WAY
- CHOKE
- FOUR-WAY

VALVE ACTUATOR SYMBOLS

- DIAPHRAGM SPRING OPPOSED
- SINGLE-ACTING CYLINDER, WITHOUT POSITIONER OR OTHER PILOT
- ROTARY MOTOR
- DOUBLE-ACTING CYLINDER WITHOUT POSITIONER OR OTHER PILOT
- SPRING, WEIGHT OR INTEGRAL PILOT FOR PSV'S
- ANY CYLINDER THAT IS ASSEMBLED WITH PILOT SO THAT ASSEMBLY IS ACTUATED BY ONE CONTROLLED INPUT
- HAND ACTUATOR/MOUNTED AT TOP, SIDE, OR BOTTOM OF ACTUATED DEVICE AS APPLICABLE
- LATCH-TYPE SOLENOID ACTUATOR WITH RESET
- SOLENOID
- (MANUAL RESET) (REMOTE RESET)

SYMBOLS FOR SELF-ACTUATED REGULATORS, VALVES, AND OTHER DEVICES

- HAND-ACTUATED ON-OFF SWITCHING VALVE IN PNEUMATIC SIGNAL LINE
- MANUALLY ADJUSTABLE RESTRICTION ORIFICE IN PNEUMATIC SIGNAL LINE
- LEVEL REGULATOR WITH MECHANICAL LINKAGE
- PRESSURE-REDUCING REGULATOR SELF CONTAINED
- PRESSURE-REDUCING REGULATOR WITH EXTERNAL PRESSURE TAP
- DIFFERENTIAL-PRESSURE-REDUCING REGULATOR WITH INTERNAL AND EXTERNAL PRESSURE TAPS
- BACKPRESSURE REGULATOR, SELF-CONTAINED
- BACKPRESSURE REGULATOR WITH EXTERNAL PRESSURE TAP
- PRESSURE-REDUCING REGULATOR WITH INTEGRAL OUTLET PRESSURE RELIEF VALVE, AND OPTIONAL PRESSURE INDICATOR (TYPICAL AIR SET)
- PRESSURE RELIEF, ANGLE PATTERN, SPRING OR WEIGHT LOADED, OR WITH INTEGRAL PILOT
- PRESSURE RELIEF, STRAIGHT-THROUGH PATTERN, SPRING- OR WEIGHT-LOADED, OR WITH INTEGRAL PILOT.
- VACUUM RELIEF VALVE, ANGLE PATTERN, SPRING OR WEIGHT-LOADED, OR WITH INTEGRAL PILOT.
- PRESSURE AND VACUUM RELIEF VALVE, SPRING OR WEIGHT-LOADED, OR WITH INTEGRAL PILOT.
- PRESSURE AND VACUUM RELIEF MANHOLE COVER
- RUPTURE DISK OR SAFETY HEAD FOR PRESSURE RELIEF.
- RUPTURE DISK OR SAFETY HEAD FOR VACUUM RELIEF.
- TEMPERATURE REGULATOR, FILLED-SYSTEM TYPE WITH WELL.
- FUSIBLE PLUG OR DISK.

SYMBOLS FOR ACTUATOR ACTION IN EVENT OF ACTUATOR POWER FAILURE (SHOWN TYPICALLY FOR DIAPHRAGM-ACTUATED CONTROL VALVE)

- TWO-WAY VALVE, FAIL OPEN
- TWO-WAY VALVE, FAIL CLOSED
- ANY VALVE, FAIL LOCKED (POSITION DOES NOT CHANGE)
- ANY VALVE, FAIL INDETERMINATE
- THREE-WAY VALVE FAIL OPEN TO PATH A-C

PRIMARY ELEMENT SYMBOLS

- ORIFICE PLATE WITH FLANGE OR CORNER TAPS
- ORIFICE PLATE WITH VENA CONTRACTA, RADIUS OR PIPE TAPS.
- ORIFICE PLATE IN QUICK CHANGE FITTING.
- TURBINE- OR PROPELLER-TYPE PRIMARY ELEMENT.
- ROTAMETER TYPE FLOW INDICATOR.
- POSITIVE-DISPLACEMENT-TYPE FLOW TOTALIZING INDICATOR
- TARGET OR MASS FLOW ETC. RECEIVER
- UNCLASSIFIED PRIMARY FLOW ELEMENT INTEGRAL WITH TRANSMITTER.
- FLOW SIGHT GLASS
- FIXED RESTRICTION ORIFICE.
- FLOW STRAIGHTENING VANES
- GAUGE GLASS, INTEGRALLY MOUNTED ON TANK.
- GAUGE GLASS EXTERNALLY MOUNTED.
- LEVEL TRANSMITTER, INTERNAL FLOAT TYPE OR DISPLACER TYPE, MOUNTED ON TANK.
- LEVEL INDICATOR, MAGNET-WINDOW TYPE, OR FLOAT OR DISPLACER TYPE.
- LEVEL INDICATOR, FLOAT TYPE, WITH GAUGE BOARD OR TAPE INDICATOR MOUNTED ABOVE TANK.
- LEVEL TRANSMITTER, DIFFERENTIAL-PRESSURE TYPE, MOUNTED ON TANK.
- LEVEL TRANSMITTER FOR OPEN TANK WITH DIP TUBE AND AIR PURGE
- TEMPERATURE ELEMENT WITH WELL.
- FILLED-SYSTEM-TYPE TEMPERATURE INDICATOR WITH WELL.
- THERMOCOUPLE OR RESISTANCE BULB (RTD) TEMPERATURE ELEMENT CONNECTED TO TEMPERATURE INDICATOR
- BIMETALLIC-TYPE THERMOMETER, GLASS THERMOMETER OR OTHER LOCAL UNCLASSIFIED TEMPERATURE INDICATOR WITH WELL

RELAYS AND COMPUTE SYMBOLS

- ELECTRIC CURRENT SIGNAL ACTUATING PNEUMATIC CONTROL VALVE WITH SEPARATELY MOUNTED ELECTRO-PNEUMATIC CONVERTER. (SEE NOTE BELOW)
- ELECTRIC CURRENT SIGNAL TO PNEUMATIC CONTROL VALVE FURNISHED WITH ATTACHED ELECTROPNEUMATIC SIGNAL CONVERTER. (SEE NOTE BELOW)
- SELECTOR RELAY WHOSE OUTPUT REPRESENTS HIGHER FLOW OF TWO INPUTS.
- SELECTOR RELAY WHOSE OUTPUT REPRESENTS LOWER FLOW OF TWO INPUTS
- GAIN RELAY RATIO OF 1TO2
- FLOW SUMMATION RELAY.
- SQUARE ROOT EXTRACTOR.
- DIFFERENTIAL RELAY

NOTE:-
I/H IS USED FOR ELECTRIC CURRENT/HYDRAULIC CONVERTER.
E/P IS USED FOR ELECTRIC VOLTAGE/PNEUMATIC CONVERTER.
I/P IS USED FOR ELECTRIC CURRENT/PNEUMATIC CONVERTER.
E/I IS USED FOR ELECTRIC VOLTAGE/ELECTRIC CURRENT CONVERTER.

LINE AND PIPING SYMBOLS

- MAJOR PROCESS LINE
- MINOR PROCESS LINE
- INSTRUMENT PNEUMATIC SIGNAL
- INSTRUMENT CAPILLARY TUBING (FILLED SYSTEM)
- ELECTRICAL SIGNAL
- HYDRAULIC POWER LINE
- ELECTROMAGNET OR SONIC SIGNAL
- FUTURE PIPING
- INSULATED LINE (THICKNESS & TYPE)
- SINGLE TRACED LINE (TYPE TO BE SPECIFIED)
- SKID LIMIT

TYPICAL PROCESS LINE IDENTIFICATION

TREATMENT/COMPRESSION – C12GEC – 10" – P – 111
- TREATMENT/COMPRESSION PLATFORM Nº 2
- LINE Nº
- PIPE SPECIFICATION
- NOMINAL LINE SIZE
- TYPE OF INSULATION
- COMMODITY IN LINE

INSULATION TYPES

I - CALCIUM SILICATE
II - CELLULAR GLASS

EQUIPMENT SYMBOLS

- ELECTRIC MOTOR DRIVEN CENTRIFUGAL PUMP
- TURBINE DRIVEN CENTRIFUGAL PUMP
- MOTOR DRIVEN RECIPROCATING PUMP
- MOTOR DRIVEN RECIPROCATING COMPRESSOR
- MOTOR DRIVEN ROTARY OR GEAR PUMP
- ELECTRIC MOTOR DRIVEN HYDRAULICALLY OPERATED AIR MOTOR DRIVER
- ELECTRICAL GENERATOR
- MOTOR DRIVEN CENTRIFUGAL COMPRESSOR
- ENGINE
- TURBINE
- MOTOR DRIVEN FORCED DRAUGHT HEAT EXCHANGER
- SHELL AND TUBE HEAT EXCHANGER
- EJECTOR/BOOSTER
- MOTOR DRIVEN BLADE MIXER
- PERMANENT STRAINER
- 'Y' TYPE STRAINER
- CAP
- SCREWED CAP
- HOSE CONNECTION
- FLOW DIRECTION
- BLIND FLANGE
- FLANGE
- BLIND AND SPACER
- FIG.8 BLIND
- TEMPORARY STRAINER
- DUPLEX BASKET STRAINER
- EXPANSION JOINT
- EXPANSION BELLOWS
- REDUCER
- FLEXIBLE HOSE
- VENT
- OPEN DRAIN
- FILTER
- TRAP OR DRAINER
- PIPING SPECIALITY
- PUSH BUTTON STATION
- FIXED TEMPERATURE FUSIBLE PLUG
- RATE OF TEMPERATURE RISE DETECTOR
- SPRINKLER HEAD (OPEN TYPE)
- SPRINKLER HEAD (FUSIBLE TYPE)
- FIRE HOSE REEL
- FIRE MONITOR
- WASHDOWN HOSE REEL
- HEATING ELEMENT
- DUTY SELECTOR SWITCH
- GAS DETECTOR
- FLAME DETECTOR
- HAND PUMP
- IONISATION SMOKE DETECTOR
- SILENCER
- VICTUALIC COUPLING
- COMPUTER
- WECO HAMER COUPLING
- EXPANSION LOOP
- PUSH BUTTON AND SELECTOR SWITCH
- KLAXON
- GLYCOL REGENERATION UNITS NOZZLE CONN (CQ1A, B, C)

NOTE:
1) PUMP ELEVATIONS ARE REFERENCED FROM A DECK LEVEL DATUM OF 100M WHICH IS THE THEORETICAL TOP OF STEEL ELEVATION, OF THE LOWER CHORD OF THE MAIN TRUSSES

2 NOV 1977

APPROVED FOR CONSTRUCTION

NOTE:- ALL INSTRUMENT AND VALVE TAG Nºs INCLUDE THE PREFIX LETTER 'C' E.G. P&H-CV2A-1

REVISIONS	DATE	APP.
3 TC 24.2.77 SEE REVISION LIST		
2 DJB 31.1.74 APPROVED FOR CONSTRUCTION	13.2.74	DJ
1 LG GWN 16 ISSUED FOR CLIENT APPROVAL	19.12.73	DJ
0 JGY 4-10-73 PRELIMINARY		

APPROVED for Construction
Date 21.12.73
ENGINEERS APPROVAL

ELF-NORGE
FRIGG FIELD
TREATMENT/COMPRESSION PLATFORM No.2
NORTH SEA JOB 1-40-E2 WD. 104-M.
McDERMOTT-HUDSON
LONDON ENGLAND

DRAWN BY	SCALE	DATE	DRWG NO.
J.G. YOUNG	NONE	26th AUG 1974	ELN 2165
DESIGNED BY		CHD	SHEET NO. C4008

LEGEND FOR PIPING AND INSTRUMENTATION DIAGRAMS

DESIGN	STRUCT	PIPING	ELEC.	INST.	BY	DATE	REVISIONS
				B		5/16/2/73	SEE REVISION LIST

DATE	APP.	DESIGN	STRUCT.	PIPING	ELEC.	NO.	BY	DATE	REVISIONS
						7	DJ	1-2-74	SEE REVISION LIST
21/2/74	DJ					6	DJ	31.1.74	SEE REVISION LIST
5-2-74	DJ					5	DJ	5-2-74	SEE REVISION LIST
18.1.74	DJ					4	JGY	15.9.73	SEE REVISION LIST

DWG. NO. ELN 2169 | SHEET NO. C4039

DP 2 LIVING UNITS
MODULE 74 (SEE NOTE 2)

VENT TO ATMOS (CSP 38) — EXISTING UNIT — NOTE 1 — ER-4"

UPPER

TC1254EL-3"-SW

TC1654EK-3"-PW

LOWER

M741 NEW UNIT — ER-4" — ER-1¼" — ER-2½"

M742 NEW LOCKER ROOM

THIRD LEVEL DRAIN 4" 540 — ER

TC1649ER-4"-DR

TC1803ER-4"-DR

NOTE 1

POTABLE WATER SUPPLY

SEA-WATER SUPPLY HEADER (FOR TOILETS ONLY)

TC1809ER-4"-DR

TC1801EA-4"-DR

EDGE OF MOD 74

QP LIVING UNITS
MODULE 76 (SEE NOTE 2)

THIRD LEVEL DRAIN 3" S40

TC1550ER-4"-DR

TC1806ER-4"-DR

TC1253EL-3"-SW

TC1653EK-3"-PW

M761 NEW UNIT

TC1802ER-4"-DR

THIRD LEVEL DRAINS 3" 540

TC1807ER-4"-DR

TC1808ER-4"-DR

TC1801EA-4"-DR

NOTE 1

DRAIN HEADER TC1801EA-6"-DR

6"-DS-412-A5

8"-DS-401-A5

OVERBOARD

3"-WS-113-A3

SEAWATER FROM B & R SUPPLY

3"-WP-32-A2

POTABLE WATER FROM B&R SUPPLY

BY McDERMOTT HUDSON

BY BROWN & ROOT

FIREWATER RING MAIN EXTENSION FOR MODULES 74 & 76
(NOTE 3)

BY McDERMOTT HUDSON — BY BROWN & ROOT

TC1246EL-4"-FW

TC1247EL-4"-FW

TC1248EL-4"-FW

TC1249EL-4"-FW

TC1852EL-2"-FW LOWER WEST BY STAIRWELL MODULE 74

TC1853EL-3"-FW

UPPER WEST BY STAIRWELL MODULE 74

THIRD LEVEL MODULE 74

TC1854EL-2"-FW

LOWER EAST BY STAIRWELL MODULE 74

TC1855EL-3"-FW

UPPER EAST BY STAIRWELL MODULE 74

THIRD LEVEL MODULE 74

TC1856EL-2"-FW LOWER WEST BY STAIRWELL MODULE 76

TC1857EL-3"-FW

UPPER WEST BY STAIRWELL MODULE 76

THIRD LEVEL MODULE 76

TC1858EL-2"-FW

LOWER EAST BY STAIRWELL MODULE 76

TC1859EL-3"-FW

UPPER EAST BY STAIRWELL MODULE 76

THIRD LEVEL MODULE 76

TC1246EL-4"-FW

TC1247EL-4"-FW

4"-WF-208-A3

SEAWATER FROM BROWN & ROOT FIREWATER SUPPLY

SEAWATER FROM BROWN & ROOT FIREWATER SUPPLY

BY McDERMOTT HUDSON — BY BROWN & ROOT

STANDARD DETAIL FOR EACH NEW UNIT HAVING PIPING CONNECTIONS
(SEE NOTE 4)

(FROM SEA WATER) EL-1" — TO TOILET FLUSH

(FROM POTABLE WATER) EK-3¼" — TO OTHER USERS

FROM TOILET — FROM WASH BASIN — FROM OTHER DRAINS

TO DRAINAGE HEADER/VENTS

ER-4" — ER-1¼" — ER-2½"

APPROVED FOR CONSTRUCTION

3 NOV 1977

LEGEND
THE LEGEND AS SHOWN ON DRAWING ELN 2169 SHT N° C4003 APPLIES TO THIS DRAWING WITH THE FOLLOWING ADDITIONS

EXISTING EQUIPMENT / PIPING

NEW EQUIPMENT / PIPING

NOTES
1) ALL DRAINAGE PIPING SHALL SLOPE CONTINUOUSLY, WITH NO POCKETS, TOWARDS BROWN & ROOT TIE IN POINT (ASSUMING LIQUID SEALS ARE MADE WITH IN EACH UNIT) ALL DRAINAGE PIPING SHALL BE MADE OF UNPLASTICIZED P.V.C.

2) FROM EACH UNIT THERE ARE WASTE PIPES FROM WASH BASINS (3), SHOWERS (2) & TOILET (1).

3) HOSE REELS ARE 1½" DIA RIGID HOSE (100 FT LONG) USE SHALL BE MADE OF THE EXISTING HOSE REELS AND BALL VALVES IF AVAILABLE.

4) FINAL ROUTING OF LOCAL CONNECTIONS TO ALL UNITS (BOTH EXISTING & NEW) SHALL BE DETERMINED BY S.B.V. ON SITE, WHEN EXTENT OF EXISTING PIPING REMOVAL IS KNOWN. MINIMUM DISTURBANCE SHALL BE CAUSED TO EXISTING PIPING, AND MAXIMUM USE MADE OF EXISTING PIPING.

FAB. STDS. REQ'D. THIS SHT.

DESIGN	ELEC.	INSTR.	PIPING	STRUCT.	NO.	BY	DATE	REVISIONS
					4	MS	24-8-77	SEE REVISION LIST
					3	DL	2-3-77	SEE REVISION LIST
					2	RB	4-3-77	APPROVED FOR CONSTRUCTION
					1	LS	16-2-77	ISSUED FOR CLIENTS APPROVAL
					0	RB	10-1-77	PRELIMINARY

CUSTOMER APPROVAL BY: [signature] 2/3/77

ENGINEERS APPROVAL

	BY	DATE
PROJECT	[signature]	2/3/77
STRUCTURAL		
PROCESS	[signature]	31/1/77
MECHANICAL	[signature]	31/1/77
ELECTRICAL	[signature]	31/1/77
INSTRUMENT	[signature]	31/1/77
PIPE CHECK		
PROP. CHECK		

ELF-NORGE
FRIGG FIELD

TREATMENT / COMPRESSION PLATFORM No.2

NORTH SEA JOB 1-40-E2 WD. 104-M.

McDERMOTT — HUDSON
LONDON — ENGLAND

DRAWN BY	SCALE	DATE	DWG NO.
R BROOKS	NONE	10 JAN 77	ELN 2169
DESIGNED BY	ZONE/AREA	SHEET NO.	
A R Woolf	00	C 4039	

P & ID FOR TEMPORARY LIVING QUARTERS MODULES 74 & 76

3

Single Wire Diagrams

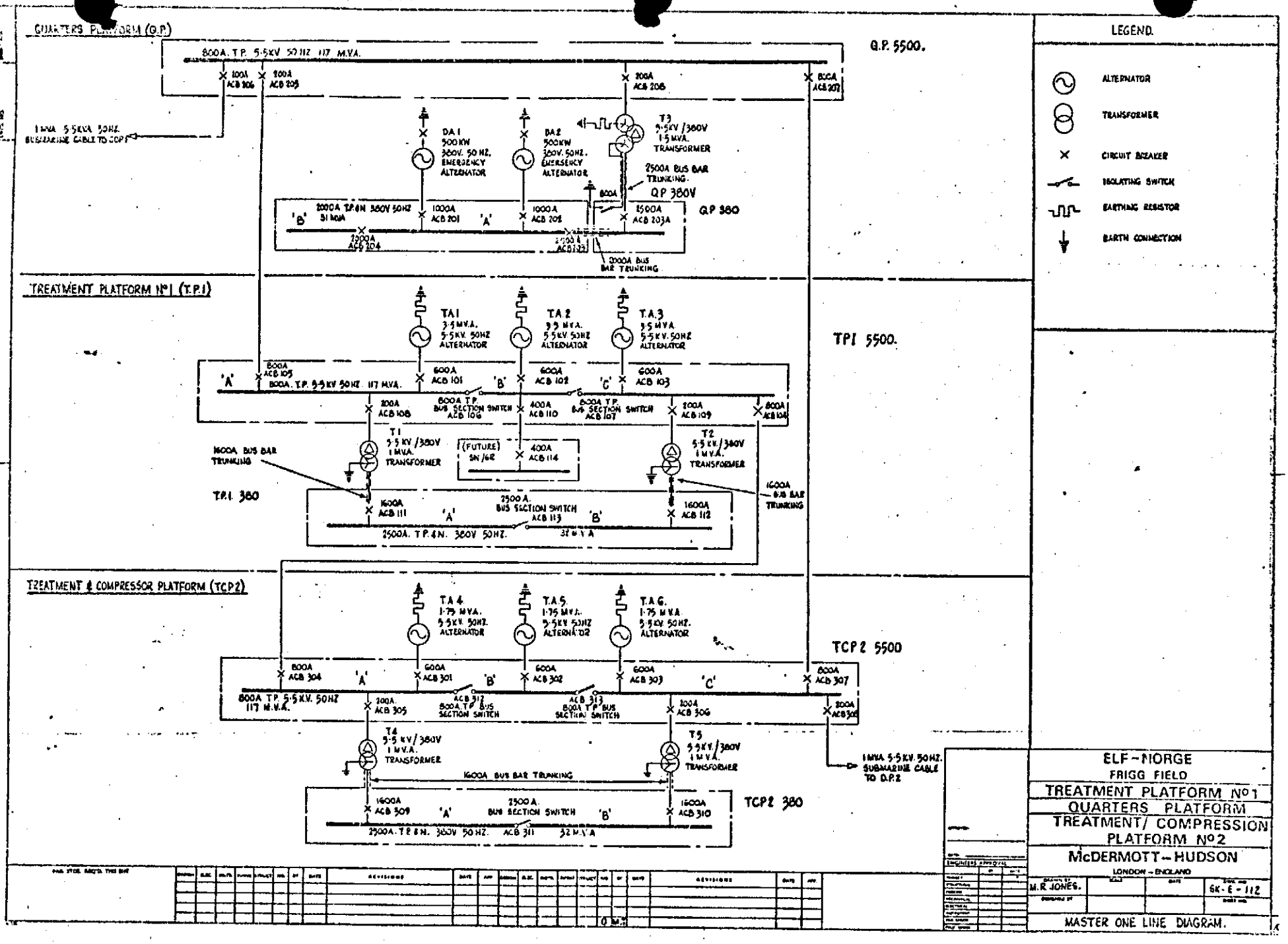

QUARTERS PLATFORM (Q.P.)
800A. T.P. 5·5KV 50HZ 117 M.V.A.
Q.P. 5500.
1 MVA 5·5KVA 50HZ SUBMARINE CABLE TO CDP1
DA1 500KW 380V. 50 HZ. EMERGENCY ALTERNATOR
DA2 500KW 380V. 50HZ. EMERGENCY ALTERNATOR
T3 5·5KV/380V 1·5 MVA. TRANSFORMER
2500A BUS BAR TRUNKING.
QP 380V
QP 380
2000A T.P.&N 380V 50HZ 31 MVA
2000A BUS BAR TRUNKING
TREATMENT PLATFORM Nº1 (T.P.1)
TA1 3·5 MVA. 5·5KV. 50HZ ALTERNATOR
TA2 3·5 MVA. 5·5KV. 50HZ ALTERNATOR
TA3 3·5 MVA. 5·5KV. 50HZ ALTERNATOR
TP1 5500.
800A. T.P. 5·5KV 50HZ 117 MVA.
800A T.P. BUS SECTION SWITCH ACB 106
800A T.P. BUS SECTION SWITCH ACB 107
T1 5·5KV/380V 1 MVA. TRANSFORMER
T2 5·5KV/380V 1 MVA. TRANSFORMER
(FUTURE) SN/6R
1600A BUS BAR TRUNKING
TP1 380
2500 A. BUS SECTION SWITCH ACB 113
2500A. T.P.&N. 380V 50HZ.
32 MVA
TREATMENT & COMPRESSOR PLATFORM (TCP2)
TA4 1·75 MVA. 5·5KV. 50HZ. ALTERNATOR
TA5 1·75 MVA. 5·5KV. 50HZ ALTERNATOR
TA6 1·75 MVA. 5·5KV. 50HZ. ALTERNATOR
TCP2 5500
800A T.P. 5·5KV. 50HZ 117 M.V.A.
ACB 312 800A T.P. BUS SECTION SWITCH
ACB 313 800A T.P. BUS SECTION SWITCH
T4 5·5KV/380V 1 MVA. TRANSFORMER
T5 5·5KV/380V 1 MVA. TRANSFORMER
1600A BUS BAR TRUNKING
1 MVA 5·5KV. 50HZ. SUBMARINE CABLE TO D.P.2
TCP2 380
2500 A. BUS SECTION SWITCH
2500A. T.P.&N. 380V 50HZ. ACB 311 32 MVA
LEGEND.
ALTERNATOR
TRANSFORMER
CIRCUIT BREAKER
ISOLATING SWITCH
EARTHING RESISTOR
EARTH CONNECTION
ELF-NORGE
FRIGG FIELD
TREATMENT PLATFORM Nº1
QUARTERS PLATFORM
TREATMENT/ COMPRESSION PLATFORM Nº2
McDERMOTT-HUDSON
LONDON - ENGLAND
M.R. JONES.
SK-E-112
MASTER ONE LINE DIAGRAM.

5

NUMBERING SYSTEM

FOR DOCUMENTS

TCP2 JOB BOOK

VOLUME 1

SECTION 5.1. Drawing Numbering System

5.1.1. The drawing number is formed by a combination of the customer name abbreviation and the job number:

Elf Norge:	Job Number:
ELN	2169

5.1.2. Sheet Numbering Sequence

Number	Description
0000 or 000	General topographic, plot plans permits.
1000 or 100	Foundation and Jackets.
2000 or 200	Deck sections, bridges, skids and structures.
3000	Buildings.
4000	Index or front sheet - (if required).
4001-4099 or 400	Process flowsheets.
4100-4199	Utility flowsheets.
4200-4299	Line Lists.
4300-4399 or 400	Equipment arrangements and plot plans.
4400-4499	Vessel drawings.
4500-4599	Special piping item drawings.
4600-4999	Equipment drawings.
5000 or 500	Piping.
6000	Electrical
7000	Instrumentation.
8000	Marine and construction equipment mooring systems
9000	Transportation and operations (loadout drawings and installation sequence).

SECTION 5.2. Specification, Requisition and Purchase Order Numbering System.

5.2.1. Equipment and Material Specifications.

Equipment and material specifications are written to describe the technical requirements for a particular piece of equipment or specifically identified piece of material for a given project.

5.2.1. (contd)

The requirements for these specifications are as follows:-

The followings sources of information are used for producing these specifications.

a) project design premises
b) flow sheets
c) electrical one line diagrams
d) area classification drawings (electrical)
e) general specifications
f) procurement information regarding the type of equipment and material available.

Each specification consists of the project(job) number and the group number. The numbering system for these groups is as follows:-

Structural

a) '00' Group, General Topographic, Plot Plans, Permits.
b) '10' Group, Foundations and Jackets.
c) '20' Group Deck Sections, Bridges, Skids and Structures.

Buildings '30' Group

Equipment and Machinery '40' Group

a) Sub-Group '41' Vessels
b) Sub-Group '42' Pumps and Drivers
c) Sub-Group '43' Compressors and Drivers
d) Sub-Group '44' Gas Turbines
e) Sub-Group '45' Internal Combustion Engines
f) Sub-Group '46' Shell and Tube Heat Exchangers
g) Sub-Group '47' Air Cooled Heat Exchangers
h) Sub-Group '48' Packaged Units
i) Sub-Group '49' Other Capital Equipment Including Cranes etc.

Piping '50' Group

Electrical '60' Group

a) Sub-Group '60' General Specifications and Package Specifications.
Specification Numbers 600 to 609.

b) Sub-Group '61' Generator and Prime Mover Specifications.
Specification Numbers 610 to 619.

c) Sub-Group '62' H.V. Switchgear and H.V. M.C.C.
Specification Numbers 620 to 629.

d) Sub-Group '63' Transformer Specifications
Specification Numbers 630 to 639.

e) Sub-Group '64' L.V. Switchgear and L.V. M.C.C.
Specification Numbers 640 to 649.

f) Sub-Group '65' D.C. System/Batteries/ Distribution Specification Numbers 650 to 659.

g) Sub-Group '66' Control Specifications
Specification Numbers 660 to 669.

h) Sub-Group '67' Protection Systems (Cathodic, Navaids etc.)
Specification Numbers 670 to 679.

i) Sub-Group '68' Minor Control (Motor Startes, Special Switches etc.)
Specification Numbers 680 to 689.

j) Sub-Group '69' Cables and Miscellaneous
Specification Numbers 691 to 699.

Instrumentation '70' Group

Sub-Group	Subject
'702'	Thermowells, Thermo Couples and Indicating Bi-Metal Thermometers
'703'	Pressure Instrumentals
'704'	Pressure Gauges
'705'	Differential Pressure
'706'	Orifice Plates, Orifice Flanges, Fabricated Meter Run.
'707'	Level Instruments
'708'	Gauge Glasses and Cooks
'709'	Control Valves
'710'	Pressure Safety Relief Valves
'711'	Traps, Filters and Strainers
'712'	Pressure, Temperature and Level Switches.
'714'	Receiver Instruments
'717'	Analytical Instruments
'79'	Bulk Material

Marine and Construction Equipment Mooring System

'80' Group

Transportation '90' Group

5.2.2. Numbering Examples

5.2.2.1. Specification:

2169	-	610
(Project Number)		(Specification Number group '6')

5.2.2.2. Requisition

2169 - 60 - R02

Project Number	Group Number	'R' indicates Requisition Number

5.2.2.3 Purchase Order

2169 - 60 - R02 - PO - 002

Project Number	-	Group Number	Requisition Number	'P O indicates Purchase Order Number.

SECTION 5.3. Equipment and line Identification

5.3.1. For equipment identification see attached P and ID's 'Legend for Piping and Instrument Diagrams'.

5.3.2. Line Identification

The line identification may consist of six parts. The following is an illustration:-

B126C-10"-P-111

B	-	Designates the 'B' unit of a contract.
126	-	Designates the line number.
C	-	Designates the line specification.
10"	-	Designates nominal line size.
P	-	Designates the commodity in the line.
111	-	Designates the insulation type.

If unit breakdown is not required, omit unit letter from the line identification.

5.3.3 Valve Identification

Each valve on the flowsheet and isometric is marked to denote piping specification valve type, valve facing and special valve type, as illustrated below:

EA2ROW

EA - Designates valve specifications
2 - Designates valve type
R - Designates valve facing
O - Designates special valve type
W - Designates opposite end valve facing

Group Description

First Group

Valve tagging which corresponds to pressure rating in standard piping specifications shall be of the following:

VALVE SPECIFICATIONS	PRIMARY ANSI RATING
EA	150 lb
EB	300 lb
EC	300 lb
ECX	600 lb
ED	600 lb
EP	600 lb
EE	900 lb
EF	1500 lb
EFX	1500 lb
EG	150 lb
EK	150 lb
EO	5000 lb
EX	6001b

Second Group

Valve type shall be any of the following:

1 -	Gate	5 -	Check
2 -	Ball	6 -	Needle
3 -	Plug	7 -	Butterfly
4 -	Globe		

Third Group

Valve facing shall be any of the following:

S -	Screwed	Z -	Socket Weld
R -	Raised face	V -	Victualic Coupling
F -	Flat Face	X -	Solder Joint
J -	RTJ	U -	Union
W -	Welded		

Fourth Group (only if necessary)

Special valve type shall be any of the following:

F -	Full Port	L -	Lift
S -	Short Pattern	T -	Tilting Disc
V -	Venturi	Y -	Lug Type
W -	Wafer	O -	Used if not special type valve but with different end facings
P -	Pipeline		

Fifth Group (only if necessary)

Valve facing for opposite end shall be any of the following:

S -	Screwed	W -	Welded
R -	Raised Face	Z -	Socket Weld
F -	Flat Face	V -	Victualic Coupling
J -	RTJ	X -	Solder Joing

6

TABLE OF CONTENTS OF

THE JOB BOOK

How to Use the Tables

TCP2 JOB BOOK

VOLUME I

SECTION 6

6.1 How to use the Tables

TCP2 Job Book consists of the following 5 volumes:-

Volume 1 - 'Project Description'-
gives a general information on the deposit characteristics of the Frigg Field, distribution of work between the prime contractors, local conditions and principles of design. Volume 1 consists of one book. The book is divided into seven sections. Each section begins with a section card which separates the sections.

Volume 2 - 'Engineering Data'-
gives detailed information on the design of the Platform. It consists of 21 books. The right hand column of the Table of Contents gives the 'Book No.' of the book in which the required Section can be found. Books are numbered from one to twenty-one. Book number is blocked on the spine and the front of each cover.

Volume 3 - 'Vendor Data'-
gives information obtained from the Vendors of the equipment, such as drawings, specifications, manuals and calculations. It consists of twenty books and an Index Book. Table of Contents is arranged by Purchase

Order, by Requisition and by Equipment Number. The right hand column of the Index gives the 'Book No.' of the book in which the required Section can be found.

Volume 4 - 'Contract and Financial Statement'- consists of the Main Contract between Elf Norge and McDermott Hudson, contracts awarded by Elf Norge and managed by McDermott Hudson, Purchase Orders, and the Financial Statement. This volume is divided into four sections and consists of eight books. The right hand column of the Table of Contents gives the 'Book No.' of the book in which the required Section can be found.

Volume 5 - 'Start-Up and Operating Instructions' This volume is divided into two main sections: Start-up Instructions and Operating Instructions. The pages are numbered, and the page numbers are given in the right hand column of the Table of Contents. This volume consists of one book.

Table of Contents for
Volumes 1, 2, 3, 4 & 5.

TCP2 JOB BOOK

VOLUME 1

PROJECT DESCRIPTION

TABLE OF CONTENTS OF VOLUME 1

SECTION 1 GENERAL

1.1 Description of the Consortium

1.2 Description of the Frigg Field

1.2.1 General information on the Frigg Field and connected projects

1.2.2 Sketch of Frigg Field and the connected projects

1.3 Distribution of work between the prime contractors

SECTION 2 DESCRIPTION OF TCP2

2.1 General Drawings and Plot Plans

2.2 General Description of the Platform

SECTION 3 GENERAL DATA

3.1 Climatic and Sea Data

SECTION 4 PRINCIPLES OF DESIGN

4.1 Principles of Electrical, Instrument and Mechanical Design

4.2 Interconnections between Platforms

4.2.1 Utilities Interconnections

4.2.2 Electrical Interconnections

4.2.3 Instrument Interconnections

4.2.4 Communication

4.3 Main P & I D 's

4.4 Single Wire Diagrams

SECTION 5 NUMBERING SYSTEM FOR DOCUMENTS

5.1 Drawing Numbering System

5.2 Specification, Requisition and Purchase Order Numbering System

5.3 Equipment Tag Numbering System

SECTION 6 TABLE OF CONTENTS OF THE JOB BOOK

6.1 How to Use the Tables

6.2 Table of Contents for Volumes 1,2,3,4 and 5

6.3 Index of Documents

SECTION 7 DISTRIBUTION LIST FOR THE JOB BOOKS

TCP2 JOB BOOK

VOLUME 2

ENGINEERING DATA

TABLE OF CONTENTS OF VOLUME 2

		BOOK
SECTION 1	DESIGN SHEETS	
1.1	PIPING AND INSTRUMENT DIAGRAMS	1
1.1.1	LIST OF P. AND I.D.'s	1
1.1.2	P. AND I.D.'s	1
1.1.3	PROCESS FLOW DIAGRAM	1
1.2	LIST OF EQUIPMENT	1
1.2.1	MECHANICAL	1
1.2.2	ELECTRICAL	1
1.2.3	INSTRUMENT	1
SECTION 2	CALCULATION NOTES	
2.1	LIST OF CALCULATION NOTES	2
2.2	CALCULATION NOTES	2
2.2.1	MECHANICAL SECTION 2.2.4 to 2.4.1.4 Part 1	3
2.2.2	ELECTRICAL SECTION 2.4.1.4 Part 2 to 2.4.1.7	4
2.2.3	INSTRUMENT SECTION 2.4.1.8 to 2.4.1.10	5
2.2.4	STRUCTURAL SECTION 2.4.1.11 to 2.4.1.14	6
2.2.5	PROCESS SECTION 2.4.1.15 to 2.4.2.5	7
	CALCULATION NOTES SECTION 2.4.2.6 to 2.4.3.1	8
	CALCULATION NOTES SECTION 2.4.3.2 to 2.4.3.4.	9
	CALCULATION NOTES SECTION 2.2.5 to 2.5.11	10
SECTION 3	DRAWINGS	
3.1	DRAWING REGISTER	11
3.2	LINE LIST	11
3.3	ISOMETRIC REGISTER	11
3.4	DRAWINGS A220 to E219	11
	DRAWINGS A220 to C4220	12
	DRAWINGS C5003 to C5577	13
	DRAWINGS C5691 to C6335	14

SECTION 3 DRAWINGS (cont'd)		BOOK
3.4 DRAWINGS	C6336 to C7372	15
DRAWINGS	C7373 to C71068	16
3.5 ISOMETRICS	01C001 to 05C052	17
	06C001 to TQC028	18

SECTION 4 STANDARDS AND GENERAL SPECIFICATIONS

4.1 LIST OF STANDARDS AND SPECIFICATIONS 19
4.2 STANDARDS AND SPECIFICATIONS 19

SECTION 5 EQUIPMENT SPECIFICATIONS AND REQUISITIONS

5.1 TABLE OF REQUISITIONS-SPECIFICATIONS (MECHANICAL ELECTRICAL INSTRUMENTS) 20
5.2 TABLE OF SPECIFICATIONS-REQUISITIONS (MECHANICAL ELECTRICAL INSTRUMENTS) 20
5.3 REQUISITIONS 20
5.4 SPECIFICATIONS 21

SECTION 6 CONTRACTS AWARDED BY ELF UNDER McDERMOTT HUDSON MANAGEMENT (Technical Aspect)

6.1 LIST OF CONTRACTS. THEIR TITLE, SPECIFICATIONS AND REFERENCE DRAWINGS 21
6.2 COPIES OF SCOPE OF WORK OF EACH CONTRACT: SPECIFICATIONS IF DIFFERENT FROM THOSE IN SECTION 4 21

TCP2 JOB BOOK

VOLUME 3

VENDOR DATA

INDEX OF CONTENTS OF VOLUME 3

ELF-NORGE - FRIGG FIELD

TREATMENT & COMPRESSION PLATFORM NO. 2

VENDOR DATA

VOLUME 3

INDICES AND INTRODUCTION

TABLE OF CONTENTS

TABLE OF CONTENTS

1.0 EXPLANATION OF DOCUMENTATION

2.0 DOCUMENT RETRIEVAL

3.0 INDEX OF DOCUMENTATION BY PURCHASE ORDER

4.0 INDEX OF DOCUMENTATION BY REQUISITION

5.0 INDEX OF DOCUMENTATION BY EQUIPMENT NUMBER

1.0 EXPLANATION OF DOCUMENTATION

1.1 The documents contained within Volume 3 of the job books are referenced by:-

Project Number
Group Number
Requisition Number
Purchase Order Number
Vendor Document Reference Number
Equipment Number

1.2 Purchase order numbers and requisition numbers contain group, requisition and purchase order references as shown (typically) below:

Project	Group	Requisition	P.O.
2169	63	R01	001

typical REQUISITION number

typical PURCHASE ORDER number

1.3 Index of Project numbers used for requisition and purchase of material and equipment.

2169 - production engineering material and equipment.

2179 - structural material.

1.4 Index of group numbers used for requisition and purchase of material and equipment.

'20' Group, Deck Sections, Bridges, Skids and Structures.
'21' Vessels

1.0 EXPLANATION OF DOCUMENTATION (Continued)

1.4 (Continued)

'42' Pumps and Drivers
'43' Compressors and Drivers
'46' Shell and Tube Heat Exchangers
'48' Packaged Units
'49' Other Capital Equipment Including Cranes etc.
'50' Piping
'51' Mechanical Miscellaneous
'60' General Specifications and Package
'62' H.V. Switchgear and H.V. M.C.C.
'63' Transformer Specifications
'64' L.V. Switchgear and L.V. M.C.C.
'65' D.C. Systems/Batteries/Distribution
'66' Control Specifications
'67' Protection Systems (Cathodic, Navaids etc.)
'68' Minor Control (Motor Starters, Special Switches etc.)
'69' Cables and Miscellaneous
'70' Instrumentation
'79' Instrumentation Bulk Material
'80' Marine & Construction Equipment
'90' Transportation

1.5 Requisition numbers are sequentially assigned. Each project group starts the sequence at R01.

i.e. 2169-67-R01 Nav. Aid Battery Charger
2169-65-R01 220V Instrument Supply Battery Charger

1.6 Purchase order numbers are sequentially assigned. Each project group starts the sequence at PO-001.

i.e. 2169-42-R01-PO.001
2169-46-R01-PO.001

1.0 EXPLANATION OF DOCUMENTATION (Continued)

1.7 All significant items of equipment are assigned an equipment number that comprises of a prefix and suffix. The index of prefixes is as follows:-

Vessels	CV
Pumps	CP
Hydraulic & Pneumatics	CQ
Heat Exchangers	CE
Compressors	CC
Misc. Mechanical Equipment	CM
Misc. Piping	CSP
Turbine Alternators	TA
Switchgear	TCP2
Transformers	T
Electrical Misc.	EM
Battery Equipment	B
Marshalling Boxes	MB
Junction Box	JB
Distribution Boards	DB
Relay Panels	RP
H & V Central Panel	ECP
Fuel Module	FM

The suffixes are assigned sequentially starting at 1 (one). In the event of two or more identical items of equipment existing a further suffix A, B, C etc. is assigned.

i.e. CV19A
CV19B etc.

ELF-NORGE - FRIGG FIELD

TREATMENT & COMPRESSION PLATFORM NO.2

VENDOR DATA

VOLUME 3

TABLE OF CONTENTS

BY PURCHASE ORDER NUMBER

ELF NORGE A/S
FRIGG FIELD
TCP2

VENDOR DATA VOLUME 3
TABLE OF CONTENTS BY PURCHASE ORDER
GROUP: 20 - STRUCTURAL

McDERMOTT HUDSON ENGINEERING
PROJECT 2169

PURCHASE ORDER					DATE	VENDOR	DESCRIPTION	BOOK NUMBER	BOOK SECTION NUMBER
PROJECT	GROUP	REQ	PO	SUPP					
2177	20	R01/9	001	6	24-12-75	D.S.DILLINGER	MODULE & PANCAKE STEEL	X	X
2177	20	R14	002	-	-	S.B.V.	REPLACEMENT MATERIAL FOR MODULE 04	1	1
2177	20	R12	003	-	-	CTT/PAULO SORELLI	NON.STRUCT. M.S.TUBULARS	X	X
2177	20	R11	004	3	14-10-76	D.S.DILLINGER	NON.STRUCT. M.S.SHAPES	X	X
2177	20	R10	005	1	11-5-76	SUMITOMO SHOJI KAISHA	HIGH STRENGTH STEEL TUBULARS	X	X
2177	20	R13/15	006	1	3-8-76	PROFILAC	STAINLESS STEEL & TRANSLUCENT CLADDING.	X	X
2177	20	-	007	-	-	PETROCON LTD.	STEEL BEAM.	X	X
2177	20	R14	008	1	17-12-76	REDMAN FISHER ENG.	GRATING BRIDGE.	X	X
2177	20	R20/21	009		CANCELLED				
2177	20	R23	010	1	29-11-76	McDERMOTT SCOTLAND.	HIGH STRENGTH STEEL TUBULARS.	X	X
2177	20	R17/19	011	4	27-1-77	ANDERMAN S.H.G.	N.S.PLATE & SHAPES	X	X
2177	20	R16	012	-	-	EXPORT UNION	N.S. M.S. TUBULARS	X	X
2177	20	R25	013	-	-	REDMAN FISHER.ENG.	GRATING	X	X
2177	20	R24/25/26	014	2	23-2-77	DRIESSENS BUIZEN.BV	N.S. MILD STEEL TURBULARS	X	X
2177	20	R24/25/26	015	-	-	S.H.G.	STEEL PLATE & SECTIONS	X	X
2177	20	R24/25/26	016	-	-	STAHL BLECHHANDER NEVSS.	STEEL PLATE & BAR	X	X
2177	20	R24/25/26	017	3	5-5-77	RHEINE.	STEEL BAR & SECTIONS	X	X

X = NOT INCLUDED IN VENDOR DATA

ELF NORGE a/S
FRIGG FIELD
TCP2

VENDOR DATA VOLUME 3
TABLE OF CONTENTS BY PURCHASE ORDER
GROUP: 20 - STRUCTURAL

McDERMOTT HUDSON ENGINEERING
PROJECT 2169

PURCHASE ORDER					DATE	VENDOR	DESCRIPTION	BOOK NUMBER	BOOK SECTION NUMBER
PROJECT	GROUP	REQ	PO	SUPP					
2177	20	R18/3(	018	-	-	STAHL BECHHANDER NEVSS	HIGH STRENGTH STEEL PLATI	X	X
2177	20	R25	019	-	-	PETROCON LTD..	STEEL BEAMS	X	X
2177	20	R28	020	-	-	P.S.C. EQUIPMENT	PANCAKE JACKS	1	2
2177	20	-	021	-	-	TESTUT AQUIMASSE	CALLIBRATION LOAD CELLS	X	X
2177	20	R33	022	1	29-3-77	PROFILAC	TRANSLUCENT CLADDING	X	X
2177	20	R31	023	1	22-3-77	SALZGITTER	NON, SRUCT, MILD STEEL SHAPES	X	X
2177	20	R32	024	-	-	McDERMOTT SCOTLAND	H.S. STEEL TURBULARS	X	X
2177	20	R35	025	-	-	GAS, OIL & CONSTRUCTION	N.S. STEEL SHAPE & PIPE	X	X
2177	20	R36/4(	026	1	8-6-72	GAS, OIL & CONSTRUCTION	N.S. STEEL PLATE, SHAPES & PIPE.	X	X
2177	20	R36	027	-	-	WOLVERHAMPTON ENG PRODUCTS	BOLTS, NUTS & WASHERS	X	X
2177	20	R41	028	-	-	REDMAN, FISHER ENG.	GRATING		

X = NOT INCLUDED IN VENDOR DATA

ELF NORG /S
FRIGG FIELD
TCP2

VENDOR DATA LUME 3
TABLE OF CONTENTS L. PURCHASE ORDER
GROUP: 20 STRUCTURAL

McDERMOTT HUDSON GINEERING
PROJECT 2169
PAGE 3 OF

PURCHASE ORDER					DATE	VENDOR	DESCRIPTION	BOOK NUMBER	BOOK SECTION NUMBER
PROJECT	GROUP	REQ	PO	SUPP					
2169	20	R20	001	-	-	FABRIEK PLAATWERKEN	STEEL DOORS & FRAMES	1	3
2169	20	-	002	-	-	C.M.P.	TUBULARS	1	4

X = NOT INCLUDED IN VENDOR DATA

ELF NORGE [redacted]3
FRIGG FIELD
TCP2

VENDOR DATA [redacted]ME 3
TABLE OF CONTENTS BY PURCHASE ORDER
GROUP: 41 - VESSELS

McDERMOTT HUDSON [redacted]NEERING
PROJECT 2169

PURCHASE ORDER					DATE	VENDOR	DESCRIPTION	BOOK NUMBER	BOOK SECTION NUMBER
PROJECT	GROUP	REQ	PO	SUPP					
2169	41	R01/2	001	8	10.5.76	C.M.P.	FREEWATER KNOCKOUT SEP.	1&2	5
2169	41	R03	002	3	10.2.77	GROSVENOR STEEL	CONDENSATE SURGE VESSEL	2	6
2169	41	R04	003	5	15.4.76	FRAM EUROPE	COALESCER	2	7
2169	41	R14	004	6	15.11.76	FLOWTECH	FILTERS	2	8
2169	41	R09/ 10/	005	8	21.7.76	NARVIK MEK	STORAGE TANKS	2	9
2169	41	R06	006	7	15.4.76	PREMABERG	FUEL GAS SCRUBBER	2	10
2169	41	R05	007	6	25.3.76	NARVIK MEK	OIL SKIMMER	2	11
2169	41	R08	008	8	16.8.76	PLENTY & SON	H.P. RELIEF SCRUBBER	2	12
2169	41	R07	009	5	15.4.76	NEWBANK	L.P. VENT SCRUBBER	3	13
2169	41	R03	010	2	20.7.76	KIRKDEAN	CONDENSATE SURGE VESSEL	3	14
2169	41	R18	011	-	-	KIRKDEAN	CONDENSATE RECYCLE TANK	3	15
2169	41	R19	012	-	-	VESTEC LTD.	AIR RECEIVER	3	16
2169	41	R20	013	-	-	KIRKDEAN	AIR START VESSELS	3	17

X = NOT INCLUDED IN VENDOR DATA

ELF NORGE . . 3
FRIGG FIELD
TCP2

VENDOR DATA V[illegible]ME 3
TABLE OF CONTENTS BY PURCHASE ORDER
GROUP: 42 - PUMPS

McDERMOTT HUDSON [illegible]NEERING
PROJECT 2169

PURCHASE ORDER					DATE	VENDOR	DESCRIPTION	BOOK NUMBER	BOOK SECTION NUMBER
PROJECT	GROUP	REQ	PO	SUPP					
2169	42	R01	001	5	10.12.76	S.P.P.	WASHDOWN PUMP	3	18
2169	42	R03	002	10	3.3.77	S.P.P.	FIRE WATER PUMP	3	19
2169	42	R06	003	1	1.76	SUMO PUMPS	SUMP PUMP	4	20
2169	42	R05	004	2	17.2.76	LEE HOWL & CO	CENTRIFUGAL PUMPS	4	21
2169	42	R04	005	4	16.3.76	DOSAPRO MILTON ROY	METHANOL PUMPS	4	22
2169	42	R07 8/9	006	3	12.76	TANGIE ENG.	PUMPS	4	23
2169	42	R11	007	5	15.4.76	LEWA HERBERT	METERING PUMPS	4	24
2169	42	R10	008	5	12.76	DOSAPRO MILTON BOY	GLYCOL INJECTION PUMPS	4	25
2169	42	R02	009	8	4.11.76	GEORGE MELLER	CONDENSATE RETURN PUMPS	4	26
2169	42	R15	010	1	4.8.76	S.P.P.	WATER CURTAIN PUMPS	4	27
2169	42	R13	011	3	12.76	SUNSTRAND INT.	CONDENSATE RECYCLE PUMPS	4	28
2169	42	R12/14	012	2	8.76	T.R.W. REDA	PUMPS	4	29

X = NOT INCLUDED IN VENDOR DATA

ELF NORGE ., 3
FRIGG FIELD
TCP2

VENDOR DATA [illegible]ME 3
TABLE OF CONTENTS BY PURCHASE ORDER
GROUP: 43 - HYDRAULICS & PNEUMATICS

McDERMOTT HUDSON [illegible]NEERING
PROJECT 2169

PURCHASE ORDER					DATE	VENDOR	DESCRIPTION	BOOK NUMBER	BOOK SECTION NUMBER
PROJECT	GROUP	REQ	PO	SUPP					
2169	43	R02	001	8	14.10.76	HYDRAULICS AND PNEUMATICS	HYDRAULIC POWER PACK-	5	30
2169	43	R04	002	-	-	HYDRAULICS AND PNEUMATICS	MANIFOLD TYPE 'B'	5	31
2169	43	R14	003	1	10.12.76	HYDRAULICS AND PNEUMATICS	MANIFOLD TYPE 'F'	5	32

X = NOT INCLUDED IN VENDOR DATA

ELF NORGE A/S
FRIGG FIELD
TCP2

VENDOR DATA VOLUME 3
TABLE OF CONTENTS BY PURCHASE ORDER
GROUP: 46 - HEAT EXCHANGERS

McDERMOTT HUDSON ENGINEERING
PROJECT 2169

PURCHASE ORDER					DATE	VENDOR	DESCRIPTION	BOOK NUMBER	BOOK SECTION NUMBER
PROJECT	GROUP	REQ	PO	SUPP					
2169	46	R01	001	8	20.10.76	CREUSOT LOIRE	GLYCOL AIR COOLER	5	33
2169	46	R02	002	5	23.7.76	JOHNSON-HUNT LTD	EXCHANGER	5	34

X = NOT INCLUDED IN VENDOR DATA

ELF NORGE A/S
FRIGG FIELD
TCP2

VENDOR DATA VOL[illegible]3
TABLE OF CONTENTS BY PURCHASE ORDER
GROUP: 48 - PACKAGE UNITS

McDERMOTT HUDSON ENG[illegible]RING
PROJECT 2169

PURCHASE ORDER					DATE	VENDOR	DESCRIPTION	BOOK NUMBER	BOOK SECTION NUMBER
OJECT	GROUP	REQ	PO	SUPP					
169	48	R02	001	2	13.9.76	COMPAIR IND.	AIR COMPRESSOR PACKAGE	5&6	35
169	48	R01	002	10	24.11.76	B.S. & B.	GLYCOL REGENERATION UNITS	6&7	36
169	48	R04	003	3	10.3.77	V.I.M.	AIR CONDITIONING PACKAGE	7&8	37
169	48	R03/5	004	1	-	V.I.M.	PRESSURIZATION EQUIPMENT	8	38
169	48	R06	005	-	-	DREXEL	SEWAGE TREATMENT PLANT	8	39

X = NOT INCLUDED IN VENDOR DATA

PURCHASE ORDER					DATE	VENDOR	DESCRIPTION	BOOK NUMBER	BOOK SECTION NUMBER
PROJECT	GROUP	REQ	PO	SUPP					
2169	49	R02/3	001	1	1.76	EUROFILCO S.A.	PIG RECEIVERS	8 &9	40
2169	49	R01	002	6	14.3.77	DE ZEEUW	CRANES	9	41
2169	49	R06	003	5	28.3.77	WATERCRAFT	LIFEBOATS	9	42
2169	49	R08	004		CANCELLED SEE PO-2169-		49-R08-PO-020		
2169	49	R12	005	-	-	TOOL CENTRE	PRECISION MEASURING EQUIPMENT	X	X
2169	49	R13	006	-	-	WELCONSTRUCT CO.	WORKSHOP STORAGE EQUIPMENT	X	X
2169	49	R17	007	-	-	SOWERBY WELCH	LIFTING EQUIPMENT	9	43
2169	49	R16	008	1	23.2.77	TOOL CENTRE	HAND TOOLS & WORKSHOP EQUIPMENT	X	X
2169	49	R07	009	2	18.11.76	VAMACO	10 TON MANUAL HOIST	9	44
2169	49	R07	010	1	18.11.76	VAMACO	MANUAL HOISTS	9	45
2169	49	R14	011	1	7.4.771	TOOL CENTRE	ELECTRIC POWERED WORKSHOP EQUIPMENT	X	X
2169	49	R11	012	-	-	AARONITE	A60 FIREWALLS AND INSULATION	X	X
2169	49	R15	013	2	25.11.77	BEAVER MACHINE TOOL CO.	VERTICAL MILLING MACHINE	X	X
2169	49	R10	014	-	-	LANSING BAGNALL	FORK LIFT TRUCK	X	X
2169	49	R19	015	-	-	A.F.A. MINERVA	FIRE EXTINGUISHERS	X	X
2169	49	R22	016	-	-	NAUTEKNIK A/S	LIFEBUOYS & LIFEJACKETS	X	X
2169	49	R23	017	-	-	TONNES FORCE LTD	MANUAL HOIST TROLLIES	9	46

X = NOT INCLUDED IN VENDOR DATA

ELF HORGE[illegible]S
FRIGG FIELD
TCP2

VENDOR DATA [illegible]OME 3
TABLE OF CONTENTS BY PURCHASE ORDER
GROUP: 49 - MISCELLANEOUS EQUIPMENT

McDERMOTT HUDSON [illegible]INEERING
PROJECT 2169

PURCHASE ORDER					DATE	VENDOR	DESCRIPTION	BOOK NUMBER	BOOK SECTION NUMBER
PROJECT	GROUP	REQ	PO	SUPP					
2169	49	R20	018	-	-	J.S. CLAYTON	FIRST AID KITS	X	X
2169	49	R21	019	1	18.1.77	NAUTENKNIK A/S	INFLATABLE LIFERAFTS	9	47
2169	49	R08	020	-	-	TONNES FORCE LTD.	5 TON ELECTRIC HOIST	10	48
2169	49	R18	021	-	-	BRISTOL UNIFORMS	SAFETY EQUIPMENT	10	49
2169	49	R024	022	1	5.5.77	AKER NORSKO	TEMPORARY ACCOMODATION UNITS	10	50

X = NOT INCLUDED IN VENDOR DATA

PURCHASE ORDER					DATE	VENDOR	DESCRIPTION	BOOK NUMBER	BOOK SECTION NUMBER
PROJECT	GROUP	REQ	PO	SUPP					
2169	50	R02	001	8	1.7.76	TECHNITUB ITALIANA	BUTT WELD FITTINGS	10	51
2169	50	R01/37	002	8	16.1.76	FITHANDEL	PIPE	10 &11	52
2169	50	R02	003	4	30.7.75	FITHANDEL	FITTINGS	11	53
2169	50	R03	004	6	14.11.75	FITHANDEL	FLANGES	11	54
2169	50	R06	005	4	7.4.76	FITHANDEL	FITTINGS	11	55
2169	50	R07	006	8	3.5.76	MAPEGAZ	BALL VALVES	11	56
2169	50	R05	007	1	14.7.76	B.K.L. ALLOYS	BUTT WELD FITTINGS	11	57
2169	50	R31	008	-	-	MOIZIEUX	FLANGES	11	58
2169	50	R31	009	1	16.1.76	BARRTHOMPSON	FLANGES	11	59
2169	50	R04	010	1	14.1.76	FITHANDEL	COLD SERVICE PIPE	11	60
2169	50	R33	011	1	29.9.75	BONNEY FORGE	BRANCH FITTINGS	11	61
2169	50	R35/44	012	7	1.4.76	BECK CRESPEL	STUD BOLTS	11	62
2169	50	R42	013	1	28.7.76	M.M.E.	EPOXY LINED PIPE	11	63
2169	50	R43	014	1	15.10.75	GAS, OIL & CONSTRUCTION	SPADES & SPACERS	11	64
2169	50	R040	015	3	1.4.76	WILSON PIPE FITTINGS	SCREWED FITTINGS	11	65
2169	50	R038	016	7	10.3.76	FITHANDEL	FLANGES	11	66
2169	50	R036	017	7	1.4.76	TROUVAY & CAUVIN	PIPE	11	67

X = NOT INCLUDED IN VENDOR DATA

PURCHASE ORDER					DATE	VENDOR	DESCRIPTION	BOOK NUMBER	BOOK SECTION NUMBER
PROJECT	GROUP	REQ	PO	SUPP					
2169	50	R22	018	-	-	MAPEGAZ	WAFER CHECK VALVES	11	68
2169	50	R33/34	019	-	18.4.77	FLEXITALIC GASKETS	GASKETS	11	69
2169	50	R23	020	1	28.1.76	WORCESTER VALVES	BALL VALVES	11	70
2169	50	R23	021	4	15.4.76	MAPEGAZ	BALL VALVES	12	71
2169	50	R23	022	1	12.3.76	T.K. VALVES LTD	BALL VALVES	12	72
2169	50	R24	023	2	9.4.76	SAPAG	VALVES	12	73
2169	50	R39	024	4	4.12.75	FITHANDEL	BUTTWELD FITTINGS	12	74
2169	50	R39	025	3	24.12.75	B.K.L. ALLOYS	BUTTWELD FITTINGS	12	75
2169	50	R39	026	1	22.7.75	TROUVAY & CAUVIN	BUTTWELD FITTINGS	12	76
2169	50	R21	027	5	23.7.76	A.J.G. WATERS	FLANGED VALVES	12	77
2169	50	R45	028	5	2.6.76	MAPEGAZ	VALVES	12	78
2169	50	R29	029	-	-	IVCO LTD	BALL VALVES	12	79
2169	50	R26	030	3	15.4.76	MAPEGAZ	BALL VALVES	12	80
2169	50	R47	031	-	-	FITHANDEL	ORIFICE FLANGES	12	81
2169	50	R21	032	4	12.10.76	R.BLACKETT-CHARLTON	CHECK VALVE	12	82
2169	50	R27	033	-	-	TRESS ENGINEERING	GATE VALVES	12	83
2169	50	R27	034	-	-	NEWMAN HATTERSLEY	GATE VALVES	12	84

X = NOT INCLUDED IN VENDOR DATA

ELF NORGE A/S
FRIGG FIELD
TCP2

VENDOR DATA BOOK 3
TABLE OF CONTENTS BY PURCHASE ORDER
GROUP: 50 - PIPING AND VALVES

McDERMOTT HUDSON ENGINEERING
PROJECT 2169

PURCHASE ORDER					DATE	VENDOR	DESCRIPTION	BOOK NUMBER	BOOK SECTION NUMBER
PROJECT	GROUP	REQ	PO	SUPP					
2169	50	R24	035	1	11.12.75	ASHFORD CONTROLS	NEEDLE VALVES	12	85
2169	50	R25	036	4	2.3.76	MOIZIEUX	CARBON STEEL FLANGES	12	86
2169	50	R57	037	3	28.4.76	OLSTILL PIPE FITTINGS	CARBON STEEL PIPE	12	87
2169	50	R25	038	7	8.10.76	MARCEL MALBRANQUE	VALVES	12	88
2169	50	R59	039	-	-	OSTILL PIPE FITTINGS	BUTTWELD FITTINGS	12	89
2169	50	R52B	040	-	-	SCANARMATUR A/S	VALVES	12	90
2169	50	R10	041	2	25.5.76	VEROLME ENG.	PIPE PUPS	12	91
2169	50	R53	042	3	15.4.76	MAPEGAZ	BALL VALVES	12	92
2169	50	R60	043	7	25.6.76	MAPEGAZ	BALL VALVES	12	93
2169	50	R61	044	4	22.3.77	TUNGUM HYDRAULICS	TUNGUM TUBING	12	94
2169	50	R63	045	2	14.7.76	TECHMATION LTD	SWAGELOCK FITTINGS	12	95
2169	50	R62	046	2	18.3.76	UNIT CONTROLS	NEEDLE CONTROLS	12	96
2169	50	R54	047	-	-	I.M.L./PAULO SORELLI	SPADES & SPACERS	12	97
2169	50	R051	048	1	31.8.76	MUNRO & MILLER	LARGE BORE BUTTWELD FITTINGS	12	98
2169	50	R55/56	049	-	-	I.M.L./ PAULO SORELLI	LARGE BORE BRANCH FITTINGS	12	99
2169	50	R50	050	2	8.12.76	FITHANDEL	LARGE BORE FLANGES	12	100
2169	50	R64/65	051	6	31.12.76	TROUVAY & CAUVIN	SMALL BORE PIPE & FITTINGS	12	101

X = NOT INCLUDED IN VENDOR DATA

PURCHASE ORDER					DATE	VENDOR	DESCRIPTION	BOOK NUMBER	BOOK SECTION NUMBER
PROJECT	GROUP	REQ	PO	SUPP					
2169	50	R067	052	3	1.12.76	IML/PAULO SORELLI	FITTINGS	12	102
2169	50	R068	053	1	23.2.76	BASSI LUIGI/SORELLI	LARGE BORE BUTTWELD FITTINGS	13	103
2169	50	R066	054	4	9.3.77	BONNEY FORGE	BRANCH FITTINGS	13.	104
2169	50	R69	055	-	-	VEROLME ENG.	CARBON STEEL PLATE	13	105
2169	50	R48	056	-	-	C.A. NORGREN	FILTER REGULATOR REGULATOR SETS	13	106
2169	50	R49	057	-	-	TAD/PAULO SORELLI	LARGE BORE PIPE	13	107
2169	50	R70	058	3	17.12.76	DARR THOMPSON	LARGE BORE FLANGES	13	108
2169	50	R02	059	-	-	BASSI LUIGI/SORELLI	24" BUTTWELD CAP	13	109
2169	50	R11	060	1	1.10.76	MOKVELD B.V.	POWER OP. SHUT OFF VALVE	13	110
2169	50	R078	061	1	13.5.76	TAD/PAULO SORELLI	24" PIPE	13	111
2169	50	R073	062	7	4.10.76	IML/PAULO SORELLI	BRANCH FITTINGS	13	112
2169	50	R037	063			ORDER CANCELLED		13	113
2169	50	R072	064	6	14.10.76	BASSI LUIGI/SORELLI	BUTTWELD FITTINGS	13	114
2169	50	R075	065	4	23.2.77	SCANARMATUR A/S	4" GLOBE VALVE	13	115
2169	50	R084	066	-	-	VEROLM ENG.	WELDING & TESTS	13	116
2169	50	R077	067	1	10.9.76	CTT/PAULO SORELLI	LARGE BORE PIPE	13	117
2169	50	R079	068	1	29.7.76	T.K. VALVES LTD	12" BALL VALVE	13	118

X = NOT INCLUDED IN VENDOR DATA

ELF NORGE A/S
FRIGG FIELD
TCP2

VENDOR DATA VOLUME 3
TABLE OF CONTENTS BY PURCHASE ORDER
GROUP: 50 - PIPING AND VALVES

McDERMOTT HUDSON ENGINEERING
PROJECT 2169

PURCHASE ORDER					DATE	VENDOR	DESCRIPTION	BOOK NUMBER	BOOK SECTION NUMBER
PROJECT	GROUP	REQ	PO	SUPP					
2169	50	R071	069	5	14.10.76	BASSI LUIGI/SORELLI	LARGE BORE FITTINGS	13	119
2169	50	R082	070	6	14.2.77	BECK CRESPEL	STUD BOLTS	13	120
2169	50	R083	071	-	-	MOIZIEUX	SPECTACLE BLINDS	13	121
2169	50	R033	072	4	10.1.77	MORRSIDE MACHINE CO	GASKETS	13	122
2169	50	R080	073	3	10.9.76	LION TUBE AND STEEL CO.	SMALL BORE PIPE	13	123
2169	50	R081	074	2	4.10.76	MOIZIEUX	SMALL BORE FLANGES	13	124
2169	50	R085	075	-	-	TROUVAY & CAUVIN	4" GATE VALVES	13	125
2169	50	R074	076	3	10.12.76	FITHANDEL	LARGE BORE FLANGES	13	126
2169	50	R12	077	-	-	KURT KOHORN A/S	3" POWER OP. BALL VALVE	13	127
2169	50	R085	078	5	17.12.76	OLSTILL PIPE FITT.	VALVES	13	128
2169	50	R097	079	2	10.12.76	EUROFIT	BLIND FLANGES	13	129
2169	50	R097	080	7	10.12.76	RORHANDEL A/S	BLIND FLANGES	13	130
2169	50	124/75	081	1	25.10.76	IMEX/ PAULO SORELLI	VALVES	13	131
2169	50	R090	082	7	15.4.77	S.E. FLANGES	FLANGES	13	132
2169	50	R101	083	2	14.4.77	TUBE TURNS LTD.	SWEL-PLUG TESTERS	13	133
2169	50	R086	084	1	8.11.76	IVCO LTD.	BALL VALVES	13	134
2169	50	R086	085	1	4.10.76	KURT KOHORN A/S	BALL VALVES	13	135

X = NOT INCLUDED IN VENDOR DATA

PURCHASE ORDER					DATE	VENDOR	DESCRIPTION	BOOK NUMBER	BOOK SECTION NUMBER
PROJECT	GROUP	REQ	PO	SUPP					
2169	50	R086	086	-	-	MAPEGAZ	BALL VALVES	13	136
2169	50	R052	087	1	10.1.77	RONA/D.W. MUNSON	4" CHECK VALVES	13	137
2169	50	R13	088	1	13.12.76	MAPEGAZ	18" BALL VALVES AND ACTUATORS	13	138
2169	50	R094	089	3	21.4.77	TECHMATION LTD	SWAGELOCK FITTINGS	X	X
2169	50	R096	090	-	-	SERCK AUDCO VALVES	MULTIPORT VALVES	13	139
2169	50	R102	091	-	-	NEWALLS INSULATION COMPANY	THERMAL INSULATION	X	X
2169	50	R105/106	092	7	14.2.77	FITHANDEL	FITTINGS	13	140
2169	50	R107/108	093	5	14.2.77	IML/PAULO SORELLI	FITTINGS	13	141
2169	50	R104	094	5	15.2.77	TROUVAY & CAUVIN	SMALL BORE PIPE	13	142
2169	50	R024	095	3	12.4.77	VALVETEC LTD	¾" GATE VALVES	14	143
2169	50	R096	096	-	-	ROCKWELL	MULTIPORT VALVES	14	144
2169	50	-	097	-	-	TRONDHEIM UNIVERSITY	IMPACT TESTING	X	X
2169	50	R117	098	-	-	UCC INTERNATIONAL	MULTICLAMP PIPE SUPPORTS	X	X
2169	50	R123	099	-	-	PREMADERG	CHAIN WHEELS & CHAINS	X	X
2169	50	R124	100	2	7.4.77	WOLVERHAMPTON ENGINEERING PRODUCTS	STUD BOLTS	14	145
2169	50	R112	101	-	-	McEVOY	FLANGE PROTECTORS	14	146
2169	50	R113	102	-	-	SOCOMAT	FLANGED SHUT OFF VALVES	14	147

X = NOT INCLUDED IN VENDOR DATA

ELF HORGE A/S
FRIGG FIELD
TCP2

VENDOR DATA VOLUME 3
TABLE OF CONTENTS BY PURCHASE ORDER
GROUP: 50 - PIPING AND VALVES

McDERMOTT HUDSON ENGINEERING
PROJECT 2169

PURCHASE ORDER					DATE	VENDOR	DESCRIPTION	BOOK NUMBER	BOOK SECTION NUMBER
PROJECT	GROUP	REQ	PO	SUPP					
2169	50	R127	103	-	-	TAD/PAULO SORELLI	14" CARBON STEEL PIPE	14	148
2169	50	R127	104	1	10.3.77	BASSI LUIGI/SORELLI	BUTTWELD FITTINGS	14	149
2169	50	R127	105	-	-	IML/PAULO SORELLI	BRANCH FITTINGS	X	X
2169	50	R127	106	-	-	RORHANDEL	GLOBE VALVES	14	150
2169	50	R127	107	-	-	LION TUBE & STEEL CO	CARBON STEEL PIPE	14	151
2169	50	R128	108	-	-	WORCESTER VALVE CO	BALL VALVES	X	X
2169	50	R128	109	-	-	PEGLER & LOUDEN	BALL VALVES	X	X
2169	50	R14	110	-	-	NEWALLS INSULATION	DUCTING INSULATION	X	X
2169	50	R132	111	-	-	RORHANDEL	CARBON STEEL FITTINGS	X	X
2169	50	R127	112	1	14.4.77	COPROSIDER	WELDOLETS	14	152
2169	50	R130	113	-	-	TROUVAY & CAUVIN	PIPE & FITTINGS	14	153
2169	50	R130	114	2	18.4.77	FITHANDEL	FLANGES	14	154
2169	50	R134	115	-	-	TEKNISK	MISCELLANEOUS MATERIAL	14	155
2169	50	-	116	-	-	STEEL CLEEN	EPOXY LINING OF PIPES	14	X

X = NOT INCLUDED IN VENDOR DATA

ELF NORGE
FRIGG FIELD
TCP2

VENDOR DATA V[illegible]E 3
TABLE OF CONTENTS BY [illegible]URCHASE ORDER
GROUP: 51 - PIPING (MISCELLANEOUS)

McDERMOTT HUDSON E[illegible]NEERING
PROJECT 2169

PURCHASE ORDER					DATE	VENDOR	DESCRIPTION	BOOK NUMBER	BOOK SECTION NUMBER
PROJECT	GROUP	REQ	PO	SUPP					
2169	51	R01	001	1	14.3.77	B.S.L.	BUBBLE CAP TRAYS	14	156
2169	51	R02	002	2	21.8.75	PREMABERG	MIST EXTRACTOR	14	157
2169	51	R04	003	3	28.11.76	FILTERATION & VALVES	IN-LINE STRAINERS	14	158
2169	51	R07	004	1	22.10.76	VESTEC LTD.	VENT FILTER	14	159
2169	51	R17	005	-	-	FERGUSON RAMSAY LTD	PADLOCKS & CHAINS	14	160
2169	51	-	006	-	-	VESTEC LTD	MANWAY ADAPTOR	X	X
2169	51	R09	007	-	-	JOHN ZINK & CO	INVERTED LIGHT GAS SEAL	14	161
2169	51	R11	008	1	9.11.76	AIROIL FRANCAISE	PIPE SILENCER	14	162
2169	51	R13	009	-	-	NORSK HAMMERVERK	FIRE MONITORS	14	163
2169	51	R16	010	-	-	NORSK HAMMERVERK	FIRE HOSES & REELS	14	164
2169	51	R18	011	-	-	NORSK HAMMERVERK	WASHDOWN HOSES & REELS	14	165
2169	51	R22	012	-	-	SEA OIL HOMCO	CENTRALISERS	X	X
2169	51	R19	013	-	-	COMPOFLEX	PLUGS & FITTINGS	14	166
2169	51	R14	014	-	-	NORSK SPRINKLER	SPRINKLER HEADS	14	167
2169	51	R27	015	-	-	ARNOLD WRAGG	STUDS & BOLTS	14	168
2169	51	R06	016	-	-	COMPOFLEX	FLEXIBLE HOSE & FITTINGS	14	169
2169	51	R30	017	-	-	SALZGITTER	NON STRUCTURAL MILD STEEL PLATE	X	X

X = NOT INCLUDED IN VENDOR DATA

ELP HORGE 3
PATCH FIELD
TO-2

VENDOR DATA ME 3
TABLE OF CONTENTS BY PURCHASE ORDER
GROUP: 51 - PIPING (MISCELLANEOUS)

McDERMOTT HUDSON HERRING
PROJECT 2169
PAGE 19 OF

PURCHASE ORDER					DATE	VENDOR	DESCRIPTION	BOOK NUMBER	BOOK SECTION NUMBER
PROJECT	GROUP	REQ	TO	SUPP					
2169	51	R24	018	-	-	AIR PRODUCTS	NITROGEN BOTTLES	14	170
2169	51	R28	019	-	-	FLUOROCARBON	SLIDE BEARING ASSEMBLY	X	X
2169	51	R33	020	-	-	G.K.N. STEELSTOCK	N.S.M.S. SHAPES	14	171
2169	51	R31	021	-	-	D.B. ENFIELD	U. BOATS	X	X

X = NOT INCLUDED IN VENDOR DATA

ELF HORGE /
FIGG FIELD
TCP2

VENDOR DATA V[illegible]HE 3
TABLE OF CONTENTS BY [illegible]RCHASE ORDER
GROUP: 60 - ELECTRICAL (GENERAL)

McDERMOTT HUDSON E[illegible]EERING
PROJECT 2169

PURCHASE ORDER					DATE	VENDOR	DESCRIPTION	BOOK NUMBER	BOOK SECTION NUMBER
PROJECT	GROUP	REQ	PO	SUPP					
2169	60	R01	001	13	21.4.77	KONGSBERG	GAS TURBINES	14	172
2169	60	R02	002	14	21.4.77	PARSONS PEEBLES	ELECTRICAL EQUIPMENT	14/15/16 &17	173

X = NOT INCLUDED IN VENDOR DATA

ELF NORGE A/S
FRIGG FIELD
TCP2

VENDOR DATA VOLUME 3
TABLE OF CONTENTS BY PURCHASE ORDER
GROUP: 62 - ELECTRICAL

McDERMOTT HUDSON ENGINEERING
PROJECT 2169

PURCHASE ORDER					DATE	VENDOR	DESCRIPTION	BOOK NUMBER	BOOK SECTION NUMBER
PROJECT	GROUP	REQ	PO	SUPP					
2169	62	R01	001	1	18.3.77	WHIPP & BOURNE	5.5 kv TRANSFORMER FEEDER PANEL	X	X

X = NOT INCLUDED IN VENDOR DATA

PURCHASE ORDER					DATE	VENDOR	DESCRIPTION	BOOK NUMBER	BOOK SECTION NUMBER
PROJECT	GROUP	REQ	PO	SUPP					
2169	63	R01	001	-	-	DRICLAD	DEMUMIDIFICATION OF PANCAKES 07 & 09	X	X

X = NOT INCLUDED IN VENDOR DATA

ELF NORGE B
FRIGG FIELD
TCP2

VENDOR DATA VOLUME 3
TABLE OF CONTENTS L. PURCHASE ORDER
GROUP: 64 - ELECTRICAL
DISTRIBUTION SYSTEMS

McDERMOTT HUDSON ENGINEERING
PROJECT 2169
PAGE 23 OF

PURCHASE ORDER					DATE	VENDOR	DESCRIPTION	BOOK NUMBER	BOOK SECTION NUMBER
PROJECT	GROUP	REQ	PO	SUPP					
2169	64	R03	001	-	-	B.P.G. ENGINEERING	DISTRIBUTION BOARD	17	174
2169	64	R01/2	002			CANCELLED - RE-	ISSUED AS P.O. 004		
2169	64	R01/2	003	2	15.1.77	HUSBANDS SHIPYARDS	DISTRIBUTION BOARD	17	175
2169	64	R02	004	-	-	REES SWITCHGEAR	DISTRIBUTION BOARD	17	176

X = NOT INCLUDED IN VENDOR DATA

ELF HORG /8
FROG FIELD
TCP2

VENDOR DATA ME 3
TABLE OF CONTENTS BY PURCHASE ORDER
GROUP: 65 - ELECTRICAL BATTERY SYSTEM

McDERMOTT HUDSON INEERING
PROJECT 2169
PAGE 24 OF

PURCHASE ORDER					DATE	VENDOR	DESCRIPTION	BOOK NUMBER	BOOK SECTION NUMBER
PROJECT	GROUP	REQ	PO	SUPP					
2169	65	R01	001	1	26.10.76	A.E.G. TELEFUNKEN	RECTIFIER/INVERTER	17	177
2169	65	R02	002	1	15.10.76	A.E.G. TELEFUNKEN	POWER SUPPLY SYSTEM	17	178
2169	65	R03	003	1	14.1.77	SIMPLEX G.E.	SWITCH FUSE UNITS	17	179

X = NOT INCLUDED IN VENDOR DATA

ELF NORGE /
FRIGG FIELD
TCP2

VENDOR DATA V[illegible]E 3
TABLE OF CONTENTS BY PURCHASE ORDER
GROUP: 66 - ELECTRICAL RELAY

McDERMOTT HUDSON E[illegible]NEERING
PROJECT 2169

PURCHASE ORDER						VENDOR	DESCRIPTION	BOOK NUMBER	BOOK SECTION NUMBER
PROJECT	GROUP	REQ	PO	SUPP	DATE				
2169	66	R02	001	-	-	MARDALE CONTROLS	RELAY PANEL	17	180
2169	66	R01	002	2	10.12.76	JOHN ZINK LTD.	CONTROL PANEL	17	181
2169	66	R03	003	1	29.11.76	ARCONTROL LTD.	RELAY PANEL	17	182
2169	66	R05	004	1	18.11.76	B.P.G. ENGINEERING	RELAY PANELS	18	183

X = NOT INCLUDED IN VENDOR DATA

ELF NORGE A/S
FRIGG FIELD
TCP2

VENDOR DATA VOLUME 3
TABLE OF CONTENTS BY PURCHASE ORDER
GROUP: 68 - ELECTRICAL

McDERMOTT HUDSON ENGINEERING
PROJECT 2169

PURCHASE ORDER					DATE	VENDOR	DESCRIPTION	BOOK NUMBER	BOOK SECTION NUMBER
PROJECT	GROUP	REQ	PO	SUPP					
2169	68	R01	001	-	-	G.E.C. PROJECTS	RESISTIVE LOAD BANKS & CABLES	X	X
2169	68	R02	002	-	-	RIETSCHOTEN & HOUWENS	REACTIVE LOAD TEST BANKS	18	185
2169	68	-	003	-	-	HARVEY PLANT	5 Kva GENERATOR SET	X	X

X = NOT INCLUDED IN VENDOR DATA

ELF NORGE[illegible] 3
FRIGG FIELD
TOT2

VENDOR DATA [illegible]E 3
TABLE OF CONTENTS B[illegible] PURCHASE ORDER
GROUP: 67 - ELECTRICAL
NAVIGATIONAL SYSTEMS

McDERMOTT HUDSON [illegible]NEERING
PROJECT 2169
PAGE 27 OF

PURCHASE ORDER					DATE	VENDOR	DESCRIPTION	BOOK NUMBER	BOOK SECTION NUMBER
PROJECT	GROUP	REQ	PO	SUPP					
2169	67	R01	001	2	28.2.77	WALLACE & TIERNAN	NAVIGATIONAL AIDS	18	184

X = NOT INCLUDED IN VENDOR DATA

ELF NORGE /
FRIGG FIELD
TOT2

VENDOR DATA V[illegible]3
TABLE OF CONTENTS BY [illegible]URCHASE ORDER
GROUP: 69 - ELECTRICAL MISCELLANEOUS ITEMS

McDERMOTT HUDSON EN[illegible]EERING
PROJECT 2169
PAGE 28 OF

PURCHASE ORDER					DATE	VENDOR	DESCRIPTION.	BOOK NUMBER	BOOK SECTION NUMBER
PROJECT	GROUP	REQ	PO	SUPP					
2169	69	R38	001	1	3.3.77	PIRELLI	SUBMARINE POWER CABLE	18	186
2169	69	R01	002	11	5.5.77	DELTA ENFIELD	CABLE	18	187
2169	69	R.VAR	003	5	8.3.77	EDMUNDSONS'EXPORT	MISC. ELECTRICAL ITEMS	18	188
2169	69	R19	004	8	5.4.77	WARWICK RIM	CABLE LADDER	X	X
2169	69	R25	005	6	2.4.77	HARVIK MEK INDUSTRI	STEELWORK	X	X
2169	69	R26	006	5	22.4.77	TINGSTAD	NUTS & BOLTS	X	X
2169	69	R05/6	007	3	15.11.76	HAWKE CABLE GLANDS	CABLE GLANDS	X	X
2169	69	R07/9/36	008	-	-	EXEM (DOMINIT) LTD	LIGHTING FITTINGS	18	189
2169	69	R08	009	-	-	ANDREWS, CHALMERS AND MITCHELL	FLOODLIGHTS	18	190
2169	69	R11/12/13	010	-	-	MARTIN & LUNEL	P.B. STATIONS & SOCKET OUTLETS	18	191
2169	69	R16	011	-	-	BROWN BOVERI	P.B. STATIONS, BOXES ETC.	18	192
2169	69	R45	012	-	-	STADILAG	GLYCOL TRACE HEATING	18	193
2169	69	R44/47	013	2	4.11.76	CITY ELECTRICS	JUNCTION BOXES	X	X
2169	69	R49	014	-	-	INSULOID	ALUMINIUM STRIP	X	X
2169	69	R51	015	2	18.11.76	HOLOPHANE	FLAMEPROOF FITTINGS	18	194
2169	69	R48	016	3	2.5.77	CABLOK	CLEATINGS	X	X
2169	69	R64	017	-	-	DANIEL INDUSTRIES	ILLUMINATIONS	X	X

X = NOT INCLUDED IN VENDOR DATA

VENDOR DAT[illegible]LUME 3
TABLE OF CONTENTS BY PURCHASE ORDER
GROUP: 69 - ELECTRICAL
MISCELLANEOUS ITEMS

PURCHASE ORDER						VENDOR	DESCRIPTION	BOOK NUMBER	BOOK SECTION NUMBER
PROJECT	GROUP	REQ	PO	SUPP	DATE				
2169	69	R27	018	-	-	LINDSAY	LINDAPTERS	X	X
2169	69	R66	019	2	31.12.76	SIMPLEX G.E.	ALARM UNITS	X	X
2169	69	R68	020	1	14.10.76	FORSTER HALE	CABLE SUPPORT STRAPS	X	X
2169	69	R65	021	-	-	BPO ENGINEERING	MARSHALLING CABINETS	18	195
2169	69	R17	022	3	15.477	C.M.P. GLANDS	CABLE GLANDS	X	X
2169	69	R72	023	-	-	WHOLESALE FITTINGS	SWITCHES	X	X
2169	69	R30	024	-	-	POLYPEN CO.	NYLON INTERLEAF	X	X
2169	69	R46	025	2	29-3-77	SYBERG & SYBERG	CABLE TRANSITS	X	X
2169	69	R18	026	-	-	BRODRENE STEEN HANSEN	ALARM FLASHING LIGHTS	X	X
2169	69	RVAR	027	2	22.4.77	CITY ELECTRICS	MISC. ELECTRICAL ITEMS FOR BRIDGE	X	X
2169	69	R02	028	2	20.4.77	ANIXTER	CABLE	X	X
2169	69	R30	029	-	-	NYLACAST LTD	NYLON INTERLEAF	X	X
2169	69	R31	030	-	-	ITT. DIST. LTD	FUSES	X	X
2169	69	R61	031	-	-	BARTON CONDUITS LTD	CABLE TRAY	X	X
2169	69	R26	032	-	-	LAKEFIELD ENG. PRODUCTS	STUD BOLTS	X	X
2169	69	-	033	-	-	PIRELLI	CABLE	X	X

X = NOT INCLUDED IN VENDOR DATA

PURCHASE ORDER					DATE	VENDOR	DESCRIPTION	BOOK NUMBER	BOOK SECTION NUMBER
PROJECT	GROUP	REQ	PO	SUPP					
2169	70	R01	001	8	23.2.77	DANIEL INDUSTRIES	METER RUNS	18	196
2169	70	-	002	1	2.76	COMSIP	SERVICES	X	X
2169	70	R08/9 /10	003	6	10.6.76	WHESSOE	RELIEF VALVES	18	197
2169	70	R05	004	7	15.2.77	SIR W.H. BAILEY	VALVES	18	198
2169	70	R06	005	8	12.2.77	EDECO.PET.SERVICES	RELIEF VALVES	18	199
2169	70	R07	006	6	2.2.77	MARSTON EXCELSIOR	RUPTUR DISCS	18	200
2169	70	R16	007	5	14.9.77	OIL CAPITAL VALVES	DELUGE VALVES	18	201
2169	70	R18	008	9	28.2.77	AUXITROL LTD	PRESSURE GAUGES	18	202
2169	70	R02	009	9	7.2.77	G.E.C. ELLIOTT	VALVES	18	203
2169	70	R04	010	7	10.1.77	G.E.C. ELLIOTT	VALVES	18	204
2169	70	R11	011	3	16.6.76	G.E.C. ELLIOTT	VALVES	19	205
2169	70	R15	012	8	28.2.77	G.E.C. ELLIOTT	VALVES	19	206
2169	70	R03	013	14	28.2.77	G.E.C. ELLIOTT	CONTROL VALVES	19	207
2169	70	R20	014	12	14.1.77	LOBA	SWITCHES	19	208
2169	70	R31	015	2	16.6.76	SEVERN INST.	CHOKE VALVES	19	209
2169	70	R19	016	1	9.7.76	DANIEL INDUSTRIES	ORIFICE FITTINGS	19	210
2169	70	R25	017	3	10,11.76	G.E.C. ELLIOTT	FLOW INDICATOR	19	211

X = NOT INCLUDED IN VENDOR DATA

ELF NORGE
FREG FIELD
TOR2

VENDOR DATA V ME 3
TABLE OF CONTENTS B. PURCHASE ORDER
GROUP: 70 - INSTRUMENTATION

McDERMOTT HUDSON EN EERING
PROJECT 2169
PAGE 31 OF

PURCHASE ORDER					DATE	VENDOR	DESCRIPTION	BOOK NUMBER	BOOK SECTION NUMBER
PROJECT	GROUP	REQ	PO	SUPP					
2169	70	R39	018	7	4.4.77	B. RHODES & SONS	FLOW INDICATOR	19	212
2169	70	RVAR	019	15	-	FOXBORO	TRANSMITTERS & CONTROLLERS	19	213
2169	70	R35	020	4	7.2.77	CAMCO	WATER PROBE	19	214
2169	70	R14	021	-	-	DRESSER EUROPE	BI-METAL THERMOMETER	19	215
2169	70	R19	022	3	30.7.76	HEECO LTD	ORIFICE PLATES	19	216
2169	70	R13	023	5	7.2.77	DANIEL INDUSTRIES	LEVEL GAUGES	19	217
2169	70	R27	024	5	15.2.77	J.& S. SIEGER LTD	GAS DETECTION SYSTEM	19	218
2169	70	R28	025	6	31.8.76	AMOT CONTROLS	PNEUMATIC ALARM	19	219
2169	70	R33/34	026	1	29.3.76	PIRELLI	SUB-COMMUNICATION CABLE	20	220
2169	70	R32	027	5	23.11.76	A.F.A. MINERVA	FIRE DETECTION SYSTEM	20	221
2169	70	R12	028	8	15.2.77	DANIEL INDUSTRIES	TURBINE METERS	20	222
2169	70	R35	029	4	6.10.76	CAMCO LTD.	WATER PROBE	20	223
2169	70	R37	030	-	-	PIRELLI	CABLE	20	224
2169	70	R29	031	1	16.6.76	GAS, OIL AND CONSTRUCTION	VACUUM BREAKER	20	225
2169	70	R39	032	3	2.2.77	MAPEGAZ	BALL VALVES	20	226
2169	70	R44/45	033	4	10.11.76	G.E.C. ELLIOTT	PILOT VALVES	20	227
2169	70	R47	034	3	27.1.77	OXY-METAL IND.	RELAY	20	228

X = NOT INCLUDED IN VENDOR DATA

SECTION 4

ELF-NORGE - FRIGG FIELD

TREATMENT & COMPRESSION PLATFORM NO.2

VENDOR DATA

VOLUME 3

TABLE OF CONTENTS

BY ITEM NUMBER

ELF NORGE A
FRIGG FIELD
TOP2

VENDOR DATA V(3
TABLE OF CONTENTS BY PURCHASE ORDER
GROUP: 70 - INSTRUMENTATION

McDERMOTT HUDSON EN EERING
PROJECT 2169

PURCHASE ORDER					DATE	VENDOR	DESCRIPTION	BOOK NUMBER	BOOK SECTION NUMBER
PROJECT	GROUP	REQ	PO	SUPP					
2169	70	R46	035	8	10.11.76	COPPAS INTERNATIONAL	SOLENOID VALVES	20	229
2169	70	R40	036	4	27.9.76	CONTROLEC	CONTROL PANELS	20	230
2169	70	R53	037	1	27.9,76	CONTROLEC	MOISTURE ANALYSER CUBICLES	20	231
2169	70	R21	038	2	16.6.76	BECKMAN	MOISTURE ANALYSER EQUIPMENT	20	232
2169	70	R55	039	2	30.6.76	HOKE INTERNATIONAL	MOISTURE ANALYSER FILTER	20	233
2169	70	R41	040	2	27.8.76	CONTROLEC	DIESEL DAY TANK LOCAL PANAL	20	234
2169	70	R58	041	1	2.7.76	ISOPAD LTD.	THERMOSTAT	20	235
2169	70	354	042	3	25.11.76	FISHER & PORTER	PURGE METER	20	236
2169	70	R60	043	4	30.11.76	HELIPERS CONTROLS	PNEUMATIC MANUAL VALVE	20	237
2169	70	R64/ 65/66	044	5	28.2.77	FOXBORO	TRANSMITTER	20	238
2169	70	R52	045	4	12.2.77	BESTOBELL MOBREY	ULTRASONIC LEVEL DETECTION	20	239
2169	70	R61	046	5	15.2.77	SCAMA LTD.	ANNUNCIATOR	20	240
2169	70	R32B	047	-	-	A.F.A. MINERVA	HALON SYSTEM	20	241
2169	70	R63	048	1	15.1.77	AURIEMA LTD.	FLOW ELEMENT SWITCH	20	242
2169	70	R62	049	1	18.10.77	AMOT CONTROLS	PNEUMATIC RELAY BOX	20	243
2169	70	R70	050	2	17.1.77	UNIT CONTROLS	H.S.D. CLOSURES	X	X
2169	70	R59	051	-	-	CAMCO LTD.	GAS FLOW COMPUTER STATIONS	20	244

X = NOT INCLUDED IN VENDOR DATA

ELF NORGE A/S
FRIGG FIELD
3CP2

VENDOR DATA VOL 3
TABLE OF CONTENTS BY PURCHASE ORDER
GROUP: 70 - INSTRUMENTATION

McDERMOTT HUDSON ENGINEERING
PROJECT 2169

PURCHASE ORDER					DATE	VENDOR	DESCRIPTION	BOOK NUMBER	BOOK SECTION NUMBER
PROJECT	GROUP	REQ	PO	SUPP					
2169	70	R73	052	-	-	CONTROLEC	CONDENSATE STORAGE PANEL	X	X
2169	70	R68	053	1	20.4.77	VISUAL ENGINEERING	MANOMETER	20	245
2169	70	R56	054	2	26.3.77	J. AGAR	GAS DENSITY METER	20	246
2169	70	R80	055	-	-	OTIS PRESSURE CONTROLS	STAINLESS STEEL FUSIBLE PLUG	20	247
2169	70	R75	056	1	15.1.77	P.P. CONTROLS	PRESSURE SWITCH	20	248
2169	70	R74	057	-	-	P.N.L. PROCESS	PNEUMATIC HORNS	X	X
2169	70	R48	058	1	9.3.77	BRODRENE STEEN HANSEN	P.A. & ALARM SYSTEM	20	249
2169	70	R76/ 77/78	059	-	-	COMSIP ENTREPRISE	CABINETS & EQUIPMENT	20	250
2169	70	R81	060	1	29.11.76	EDECO PET. SERVICE	TRIP VALVES	X	X
2169	70	R85	061	-	-	VALTEK ENG. LTD.	CONTROL VALVES	20	251
2169	70	R84	062	-	-	CONTROLEC	PRESSURE SWITCH & ANNUNCIATOR CABINET	20	252
2169	70	R83	063	-	-	WESTINGHOUSE	QUICK EXHAUST VALVES	X	X
2169	70	R87	064	-	-	WALTER KIDDE	HAND SWITCHES	X	X
2169	70	R18	065	-	-	MORVALVES LTD.	PRESSURE GAUGES	20	253
2169	70	R90	066	-	-	CROWN	PALLET TRUCK	X	X
2169	70	R86	067	1	2.2.77	FOXBORO	DIFFERENTIAL ALARM AMP	X	X
2169	70	-	068	-	-	DANIEL INDUSTRIES	SAMPLE PIPE	X	X

X = NOT INCLUDED IN VENDOR DATA

ELF HORGE 3
FRIGG FIELD
TCP2

VENDOR DATA E 3
TABLE OF CONTENTS BY PURCHASE ORDER
GROUP: 70 - INSTRUMENTATION

McDERMOTT HUDSON E HEERING
PROJECT 2169
PAGE 34 OF

PURCHASE ORDER					DATE	VENDOR	DESCRIPTION	BOOK NUMBER	BOOK SECTION NUMBER
PROJECT	GROUP	REQ	PO	SUPP					
2169	70	R94	069	-	-	ROSEMOUNT ENG.	RESISTANCE BULB ASS.	20	254
2169	70	R88	070	-	-	WILLIS OIL TOOL CO	SYSTEM MONITOR PILOT	20	255
2169	70	R91	071	-	-	FOXBORO YOXALL	3 PEN RECORDER	20	256
2169	70	R97	072	-	-	R.E. ENFIELD	ANALYSER PROBES	20	257
2169	70	R93	073	-	-	P.S.I. LTD.	ENCLOSURES	X	X
2169	70	R95	074	-	-	HENGSTLER	METERING COUNTERS	X	X

X = NOT INCLUDED IN VENDOR DATA

PURCHASE ORDER					DATE	VENDOR	DESCRIPTION	BOOK NUMBER	BOOK SECTION NUMBER
PROJECT	GROUP	REQ	PO	SUPP					
2169	70	R101	101	-	-	ITT/MTI	ALARM SEQUENCE	X	X
2169	70	R102	102	6	10.3.77	FOXBORO	INSTRUMENTS	X	X
2169	70	R103	103	1	1.7.76	S.T.K.	EXCHANGES, TELEPHONE SETS	X	X
2169	70	R104	104	-	-	C.E.T.T.	TELEMETRY EQUIPMENT	20	258
2169	70	R106	106	3	13.9.76	TELEMECHANIQUE	COMPUTER	X	X
2169	70	R108	108	-	-	GORSE	CABLE	X	X
2169	70	R019	109	2	10.3.77	SAINT CYR	PNEUMATIC ANNUNCIATOR	X	X
2169	70	R110	110	-	-	C.I.T. ALCATER	COMPUTER SPARE	X	X
2169	70	R111	111	-	-	LOGABAX	PRINTER & SPARES	X	X
2169	70	R112	112	-	-	COMEFI	LOCAL PANEL	X	X
2169	70	R114	114	-	-	COMSIP	TELEMETRY CONNECTION	X	X

X = NOT INCLUDED IN VENDOR DATA

PURCHASE ORDER					DATE	VENDOR	DESCRIPTION	BOOK NUMBER	BOOK SECTION NUMBER
PROJECT	GROUP	REQ	PO	SUPP					
2169	79	R66	001			CANCELLED			
2169	79	R31	002	6	26.1.77	ARNE AANESTAD	MILD STEEL HARDWARE	X	X
2169	79	R56/7/8	003	1	8.10.75	GAS,OIL & CONSTRUCTION	PIPE FITTINGS	20	259
2169	79	R52/53	004	1	26.10.76	GAS,OIL & CONSTRUCTION	PIPE & FITTINGS	X	X
2169	79	R61	005	-	-	PEROLO	VALVES	20	260
2169	79	R32/51	006	4	29.11.76	TROUVAY & CAUVIN	CARBON STEEL PIPE	20	261
2169	79	R63	007	2	10.2.76	MAPEGAZ	VALVES	20	262
2169	79	R71/72	008	3	2.2.77	HOKE INTERNATIONAL	COMPRESSION FITTINGS	X	X
2169	79	R62	009	1	1.9.76	ASHFORD CONTROLS	GLOBE VALVES	20	263
2169	79	R66	010	-	-	MANEX	STAINLESS STEEL TUBE	20	264
2169	79	R64	011	4	17.8.76	ASHFORD CONTROLS	THREE VALVE MANIFOLDS	20	265
2169	79	R67	012	1	20.5.76	FINE TUBES LTD.	MONEL TUBE	20	266
2169	79	R81	013	1	13.8.76	TECHMATION	TEFLON TAPE	X	X
2169	79	R08/11/36/15					FITTINGS AND JUNCTION BOXES		
		/18/20	014	5	2.2.77	EDMUNDSONS		X	X
2169	79	R34	015	-	-	G.T.S.	CHANNEL	X	X
2169	79	R35	016	1	30.7.76	BARTON CONDUITS	CABLE TRAYS	X	X

X = NOT INCLUDED IN VENDOR DATA

PURCHASE ORDER					DATE	VENDOR	DESCRIPTION	BOOK NUMBER	BOOK SECTION NUMBER
PROJECT	GROUP	REQ	PO	SUPP					
2169	79	R05	017	4	2.2.77	HAWKE CABLE GLANDS	CABLE GLANDS	X	X
2169	79	R77/78	018	9	7.10.76	C.A. NORGREN	FILTER	X	X
2169	79	R74	019	1	13.8.76	P.S.I. LTD	INSTRUMENT ENCLOSURE	20	267
2169	79	R68	020	2	9.12.76	FINE TUBES LTD	STAINLESS STEEL MULTITUBE	20	268
2169	79	R68	021	2	1.12.76	S.M.P.	FABRICATION OF MULTITUBE	X	X
2169	79	R33/38	022	2	25.1.77	ARNE AARNESTAD	NUTS, BOLTS & WASHERS	X	X
2169	79	R41	023	-	-	WARWICK RIM	CABLE TRAY	X	X
2169	79	R40	024	2	15.2.77	CADWELD	WELDING EQUIPMENT	X	X
2169	79	R79	025	2	4.2.77	TECHMATION LTD	REGULATING VALVE	20	269
2169	79	R61	026	-	-	SCANARMATUR	CHECK VALVE	20	270
2169	79	R39	027	-	-	G.G. ENGINEERING	STUDS & SPACERS	X	X
2169	79	R66	028	-	-	GAS, OIL AND CONSTRUCTION	STAINLESS STEEL COIL	20	271
2169	79	R55/60	029	1	5.2.77	G.G. ENGINEERING	PIPE & FITTINGS	X	X
2169	79	R37	030	1	24.11.76	EDMUNDSON	TAPE WASHERS COMPOUND	X	X
2169	79	R70	031	3	28.2.77	P.S.I. LTD.	NYLON TUBE	X	X
2169	79	R06	032	3	28.2.77	HAWKE CABLE GLANDS	CABLE TRANSITS	X	X
2169	79	R56/57	033	-	-	RORHANDEL	PIPE FITTINGS	20	272

X = NOT INCLUDED IN VENDOR DATA

ELF NORGE A
FRIGG FIELD
TCP2

VENDOR DATA V[illegible]3
TABLE OF CONTENTS BY PURCHASE ORDER
GROUP: 79 - INSTRUMENTATION

McDERMOTT HUDSON EN[illegible]EERING
PROJECT 2169

PURCHASE ORDER					DATE	VENDOR	DESCRIPTION	BOOK NUMBER	BOOK SECTION NUMBER
PROJECT	GROUP	REQ	PO	SUPP					
2169	79	R12	034	-	-	ELECTRICAL CONDUITS	CONDUIT FITTINGS	X	X
2169	79	R09	035	-	-	KLIPPON	WEATHERPROOF JUNCTION BOXES	X	X
2169	79	R05	036	-	-	C.M.P.	CABLE TRAY	X	X
2169	79	R93	037	-	-	BARTON CONDUITS	CABLE TRAY	X	X
2169	79	-	038	-	-	CITY ELECTRICS	CONDUIT BOXES	X	X
2169	79	R54	039	-	-	R.E. ENFIELD	SPECIAL ADAPTORS	X	X
2169	79	R91	040	-	-	HAWKE	CABLE GLANDS	X	X
2169	79	R92	041	-	-	KLIPPON	JUNCTION BOXES	X	X
2169	79	R10	042	-	-	M.C. BIGNELL	SWITCHES	X	X
2169	79	-	043	-	-	WHOLESALE FITTINGS	HOOTERS	X	X
2169	79	R01	044	-	-	STERLING CABLES	CABLE	X	X
2169	79	R03	045	-	-	ANIXTER (UK) LTD	CABLE	X	X
2169	79	R33/38	046	-	-	RICHARDS & ALLEN	SCREWS, NUTS & WASHERS	X	X

X = NOT INCLUDED IN VENDOR DATA

ELF NORG /3
FREGG FIELD
TCP2

VENDOR DATA VOLUME 3
TABLE OF CONTENTS BY PURCHASE ORDER
GROUP: 80 -

McDERMOTT HUDSON ENGINEERING
PROJECT 2169
PAGE 39 OF

PURCHASE ORDER					DATE	VENDOR	DESCRIPTION	BOOK NUMBER	BOOK SECTION NUMBER
PROJECT	GROUP	REQ	PO	SUPP					
2169	80	-	001	2	8.76	FROST WYNYARD	MODEL T.C.P.2	X	X

X = NOT INCLUDED IN VENDOR DATA

ELF BORGE A/S
FRIGG FIELD
TCP2

VENDOR DATA VOLUME 3
TABLE OF CONTENTS BY PURCHASE ORDER
GROUP: 90 -

McDERMOTT HUDSON ENGINEERING
PROJECT 2169

PURCHASE ORDER						VENDOR	DESCRIPTION	BOOK NUMBER	BOOK SECTION NUMBER
PROJECT	GROUP	REQ	PO	SUPP	DATE				
2169	90		001	-	-	UNION TRANSPORT	SHIPPING SERVICE	X	X
2169	90		002	-	-	S.I.S.	INSPECTION & EXPEDITING SERVICE	X	X
2169	90		003	-	-	LLOYDS REGISTER	INSPECTION SERVICE	X	X
2169	90		004	-	-	E.S.A.B.	WELDING RODS	X	X
2169	90		005	-	-	H.M.S.O.	SUBSCRIPTION	X	X

ELF NORGE A/S
FRIGG FIELD
T.C.P - 2

VENDOR DATA VOLUME 3
TABLE OF CONTENTS BY ITEM NUMBER
GROUP 20 - STRUCTURAL

McDERMOTT HUDSON ENGINEERING
PROJECT 2169

EQUIPMENT NUMBER	DESCRIPTION	VENDOR	PURCHASE ORDER NUMBER	BOOK NUMBER	SECTION NUMBER
	MODULE & PANCAKE STEEL	D.S. DILLINGER	2177-20-R01/9-PO-001	X	X
	HIGH STRENGTH STEEL TUBULARS	SUMITOMO SHOJI KAISHA	2177-20-R10-PO-005	X	X
	NON STRUCTURAL MILD STEEL SHAPES	D.S. DILLINGER	2177-20-R11-PO-004	X	X
	NON STRUCTURAL MILD STEEL TUBULARS	CTT/PAULO SORELLI	2177-20-R12-PO-003	X	X
	STAINLESS STEEL & TRANSLUCENT CLADDING	PROFILAC	2177-20-R13/15-PO-006	X	X
	REPLACEMENT MATERIAL FOR MODULE 04	S.B.V.	2177-20-R14-PO-002	1	1
	GRATING - BRIDGE	REDMAN FISHER ENG.	2177-20-R14-PO-008	X	X
	NON STRUCTURAL MILD STEEL TUBULAR	EXPORT UNION	2177-20-R16-PO-012	X	X
	NON STRUCTURAL PLATE & SHAPES	ANDERMAN S.H.G.	2177-20-R17/19-PO-011	X	X
	HIGH STRENGTH STEEL PLATE	STAHL BECHHANDER NEVSS	2177-20-R18/30-PO-018	X	X
	HIGH STRENGTH STEEL TUBULARS	McDERMOTT SCOTLAND	2177-20-R23-PO-010	X	X
	NON STRUCTURAL MILD STEEL TUBULARS	DRIESSENS BUIZEN BV	2177-20-R24/25/26-PO-014	X	X
	STEEL PLATES & SECTIONS	S.H.G.	2177-20-R24/25/26-PO-015	X	X
	STEEL PLATE & BAR	STAHL BECHHANDER NEVSS	2177-20-R24/25/26-PO-016	X	X
	STEEL BAR & SECTIONS	RHEINEISEN	2177-20-R24/25/26-PO-017	X	X
	GRATING	REDMEN FISHER ENG.	2177-20-R25-PO-013	X	X
	STEEL BEAMS	PETROCON LTD	2177-20-R25-PO-019	X	X

* ITEM COVERED IN OTHER GROUPS

X = NOT INCLUDED IN VENDOR DATA

ELF NORGE A/S
FRIGG FIELD
T.C.P - 2

VENDOR DATA VOLUME 3
TABLE OF CONTENTS BY ITEM NUMBER
GROUP 20 - STRUCTURAL

McDERMOTT HUDSON ENGINEERING
PROJECT 2169

EQUIPMENT NUMBER	DESCRIPTION	VENDOR	PURCHASE ORDER NUMBER	BOOK NUMBER	SECTION NUMBER
	PANCAKE JACKS	P.S.C, EQUIPMENT	2177-20-R28-PO-020	1	2
	NON STRUCTURAL MILD STEEL SHAPES	SALZGITTER	2177-20-R31-PO-023	X	X
	HIGH STRENGTH STEEL TUBULARS	McDERMOTT SCOTLAND	2177-20-R32-PO-024	X	X
	TRANSLUCENT CLADDING	PROFILAC	2177-20-R33-PO-022	X	X
	NON STRUCTURAL STEEL SHAPE & PIPE	GAS, OIL AND CONSTRUCTION	2177-20-R35-PO-025	X	X
	BOLTS, NUTS AND WASHERS	WOLVERHAMPTON ENG.	2177-20-R36-PO-027	X	X
	NON STRUCTURAL STEEL PLATE, SHAPES & PIPE	GAS, OIL AND CONSTRUCTION	2177-20-R36/40-PO-026	X	X
	GRATING	REDMAN FISHER ENG.	2177-20-R41-PO-028	X	X
	STEEL BEAM	PETROCON LTD	2177-20-R -PO-007	X	X
	CALLIBRATION LOAD CELLS	TESTUT AQUIMASSE	2177-20-R -PO-021	X	X.

* ITEM COVERED IN OTHER GROUPS

X = NOT INCLUDED IN VENDOR DATA

ELF NORGE A/S
FRIGG FIELD
T.C.P - 2

VENDOR DATA VOLUME 3
TABLE OF CONTENTS BY ITEM NUMBER
GROUP 20 - STRUCTURAL

McDERMOTT HUDSON ENGINEERING
PROJECT 2169

EQUIPMENT NUMBER	DESCRIPTION	VENDOR	PURCHASE ORDER NUMBER	BOOK NUMBER	SECTION NUMBER
	STEEL DOORS & FRAMES	FABRIEK PLAATWERKEN	2169-20-R20-P0-001	1	3
	TUBULARS	C.M.P.	2169-20-R -P0-002	1	4

* ITEM COVERED IN OTHER GROUPS

X = NOT INCLUDED IN VENDOR DATA

ELF NORGE A/S
FRIGG FIELD
T.C.P - 2

VENDOR DATA VOLUME 3
TABLE OF CONTENTS BY ITEM NUMBER
GROUP 41 - VESSELS

McDERMOTT HUDSON ENGINEERING
PROJECT 2169

EQUIPMENT NUMBER	DESCRIPTION	VENDOR	PURCHASE ORDER NUMBER	BOOK NUMBER	SECTION NUMBER
CV1 A,B&C	FREE WATER KNOCKOUT SEPARATOR	C.M.P.	2169-41-R01-P0-001	1&2	5
CV2 A,B&C	FREE WATER KNOCKOUT SEPARATOR	C.M.P.	2169-41-R02-P0-001	1&2	5
CV3	CONDENSATE SURGE VESSEL	KIRKDEAN	2169-41-R03-P0-010	3	14
CV4	COALESCER	FRAM EUROPE	2169-41-R04-P0-003	2	7
CV5	OIL SKIMMER	NARVIK MEK INDUSTRI	2169-41-R05-P0-007	2	11
CV6	FUEL GAS SCRUBBER	PREMABERG	2169-41-R06-P0-006	2	10
CV7	LOW PRESSURE VENT SCRUBBER	NEWBANK	2169-41-R07-P0-009	3	13
CV9	GLYCOL STORAGE TANK	NARVIK MEK INDUSTRI	2169-41-R09-P0-005	2	9
CV10	DIESEL STORAGE TANK	NARVIK MEK INDUSTRI	2169-41-R10-P0-005	2	9
*CV11 A&B	FIRE WATER PUMP DIESEL DAY TANKS	S.P.P.	2169-42-R03-P0-002	3	19
CV13	SUMP CAISSON	BROWN & ROOT		X	X
*CV14 A,B&C	CONDENSATE SEPARATOR	B.S. & B.	2169-48-R01-P0-002	6&7	36
*CV15 A,B&C	GLYCOL FILTER	B.S. & B.	2169-48-R01-P0-002	6&7	36
*CV16 A,B&C	GLYCOL STILL	B.S. & B.	2169-48-R01-P0-002	6&7	36
*CV17 A,B&C	GLYCOL SURGE TANK	B.S. & B.	2169-48-R01-P0-002	6&7	36
*CV18 A,B&C	TURBINE GAS DEMISTERS	B.S. & B.	2169-48-R01-P0-002	6&7	36
*CV19,A,B,C D,E & F	GLYCOL PULSATION DAMPENERS	B.S. & B.	2169-48-R01-P0-002	6&7	36

* ITEM COVERED IN OTHER GROUPS

X = NOT INCLUDED IN VENDOR DATA

ELF NORGE A/S
FRIGG FIELD
T.C.P - 2

VENDOR DATA VOLUME 3
TABLE OF CONTENTS BY ITEM NUMBER
GROUP 41 - VESSELS

McDERMOTT HUDSON ENGINEERING
PROJECT 2169

EQUIPMENT NUMBER	DESCRIPTION	VENDOR	PURCHASE ORDER NUMBER	BOOK NUMBER	SECTION NUMBER
*CV20 A,B,C	CHARCOAL FILTER	B.S. & B.	2169-48-R01-P0-002	6&7	36
CV21	DIESEL & GLYCOL CHARCOAL FILTER	FLOWTECH	2169-41-R14-P0-004	2	8
CV23	METHANOL STORAGE TANK	NARVIK MEK INDUSTRI	2169-41-R11-P0-005	2	9
CV24	HIGH PRESSURE RELIEF SCRUBBER	PLENTY & SON	2169-41-R08-P0-008	2	12
*CV29 A&B	CONDENSATE PULSATION DAMPENERS	GEORGE MELLER	2169-42-R02-P0-009	4	26
*CV30 A&B	SLOPS OIL PULSATION DAMPENERS	LEWA HERBERT	2169-42-R11-P0-007	4	24
CV31	DIESEL & GLYCOL CHARCOAL FILTER	FLOWTECH	2169-41-R14-P0-004	2	8
*CV32 A&B	METHANOL PULSATION DAMPENERS	DOSAPRO MILTON ROY	2169-42-R04-P0-005	4	22
CV33	CONDENSATE RECYCLE TANK	KIRKDEAN	2169-41-R18-P0-011	3	15
CV34 A&B	AIR RECEIVER	KIRKDEAN	2169-41-R20-P0-013	3	17
*CV35 A&B	AIR INLET FILTER	COMPAIR IND.	2169-48-R02-P0-001	5 & 6	35
*CV36 A&B	AIR RECEIVER	COMPAIR IND.	2169-48-R02-P0-001	5 & 6	35
*CV37 A,B,C,D	AIR DRYERS	COMPAIR IND.	2169-48-R02-P0-001	5 & 6	35
CV38	CONDENSATE STORAGE TANK	HOEYER ELLEFSEN		X	X
*CV39 A&B	AIR PULSATION DAMPENERS	COMPAIR IND.	2169-48-R02-P0-001	5 & 6	35
CV40	ITEM DELETED				
*CV41 A&B	MOISTURE PRE-FILTER	COMPAIR IND.	2169-48-R02-P0-001	5 & 6	35

* ITEM COVERED IN OTHER GROUPS

X = NOT INCLUDED IN VENDOR DATA

ELF NORGE A/S
FRIGG FIELD
T.C.P - 2

VENDOR DATA VOLUME 3
TABLE OF CONTENTS BY ITEM NUMBER
GROUP 41 - VESSELS

McDERMOTT HUDSON ENGINEERING
PROJECT 2169
PAGE 46 OF

EQUIPMENT NUMBER	DESCRIPTION	VENDOR	PURCHASE ORDER NUMBER	BOOK NUMBER	SECTION NUMBER
*CV42	HYDRAULIC OIL TANK	HYDRAULICS AND PNEUMATICS	2169-43-R02-PO-001	5	30
*CV43 A&B	DUST FILTER	COMPAIR IND.	2169-48-R02-PO-001	5 & 6	35
CV44	AIR RECEIVER	VESTEC LTD.	2169-41-R19-PO-012	3	16

* ITEM COVERED IN OTHER GROUPS

X = NOT INCLUDED IN VENDOR DATA

ELF NORGE A/S
FRIGG FIELD
T.C.P - 2

VENDOR DATA VOLUME 3
TABLE OF CONTENTS BY ITEM NUMBER
GROUP 42 - PUMPS

McDERMOTT HUDSON ENGINEERING
PROJECT 2169

EQUIPMENT NUMBER	DESCRIPTION	VENDOR	PURCHASE ORDER NUMBER	BOOK NUMBER	SECTION NUMBER
CP1 A&B	CONDENSATE BOOSTER PUMP	LEE HOWL & CO	2169-42-R05-P0-004	4	21
CP2 A&B	CONDENSATE RETURN PUMP	G. MELLOR	2169-42-R02-P0-009	4	26
CP3	WASTE OIL SUMP PUMP	SUMO PUMPS LTD	2169-42-R06-P0-003	4	20
CP6 A&B	FIRE WATER PUMP	S,P,P.	2169-42-R03-P0-002	3	19
CP7	WASHDOWN PUMP	S.P.P.	2169-42-R01-P0-001	3	18
CP8 A&B	DIESEL PUMP	TANGIE ENG.	2169-42-R09-P0-006	4	23
CP9 A&B	SLOPS OIL PUMP	LEWA - KINDER JANES	2169-42-R11-P0-007	4	24
*CP10 A,B, C,D,E &F	GLYCOL PUMPS	B.S. & B.	2169-48-R01-P0-002	6&7	36
CP12 A&B	METHANOL INJECTION PUMP	DOSAPRO MILTON ROY	2169-42-R04-P0-005	4	22
CP13 A&B	GLYCOL FILL PUMP	TANGIE ENG.	2169-42-R08-P0-006	4	23
CP14 A&B	GLYCOL INJECTION PUMP	DOSAPRO MILTON ROY	2169-42-R10-P0-008	4	25
CP15 A&B	CONDENSATE RECYCLE PUMPS	SUNSTRAND INT.	2169-42-R13-P0-011	4	28
CP16 A&B	WATER CURTAIN PUMPS	S.P.P.	2169-42-R15-P0-010	4	27
CP17 A&B	METHANOL TRANSFER PUMP	TANGIE ENG.	2169-42-R07-P0-006	4	23
*CP18 A&B	LUBE OIL PUMP	COMPAIR IND.	2169-48-R02-P0-001	5 & 6	35
*CP19 A&B	COOLING WATER PUMP	COMPAIR IND.	2169-48-R02-P0-001	5 & 6	35
CP20 A	CONDENSATE STORAGE PUMP	T.R.W. REDA	2169-42-R12-P0-012	4	29

* ITEM COVERED IN OTHER GROUPS

X = NOT INCLUDED IN VENDOR DATA

ELF NORGE A/S
FRIGG FIELD
T.C.P - 2

VENDOR DATA VOLUME 3
TABLE OF CONTENTS BY ITEM NUMBER
GROUP 42 - PUMPS

McDERMOTT HUDSON ENGINEERING
PROJECT 2169

EQUIPMENT NUMBER	DESCRIPTION	VENDOR	PURCHASE ORDER NUMBER	BOOK NUMBER	SECTION NUMBER
CP21	OILY WATER PUMP	T.R.W. REDA	2169-42-R14-PO-012	4	29
*CP22 A&B	HYDRAULIC OIL PUMPS	HYDRAULICS & PNEUMATICS	2169-43-R02-PO-001	5	30

* ITEM COVERED IN OTHER GROUPS

X = NOT INCLUDED IN VENDOR DATA

ELF NORGE A/S
FRIGG FIELD
T.C.P - 2

VENDOR DATA VOLUME 3
TABLE OF CONTENTS BY ITEM NUMBER
GROUP 43 - HYDRAULICS & PNEUMATICS

McDERMOTT HUDSON ENGINEERING
PROJECT 2169

EQUIPMENT NUMBER	DESCRIPTION	VENDOR	PURCHASE ORDER NUMBER	BOOK NUMBER	SECTION NUMBER
CQ7	HYDRAULIC POWER UNIT	HYDRAULICS & PNEUMATICS	2169-43-R02-PO-001	5	30
CQ8A	HYDRAULIC POWER UNIT	HYDRAULICS & PNEUMATICS	2169-43-R02-PO-001	5	30
	MANIFOLD TYPE 'B'	HYDRAULICS & PNEUMATICS	2169-43-R04-PO-002	5	31
	MANIFOLD TYPE 'F'	HYDRAULICS & PNEUMATICS	2169-43-R14-PO-003	5	32

* ITEM COVERED IN OTHER GROUPS

X = NOT INCLUDED IN VENDOR DATA

ELF NORGE A/S
FRIGG FIELD
T.C.P - 2

VENDOR DATA VOLUME 3
TABLE OF CONTENTS BY ITEM NUMBER
GROUP 46 - HEAT EXCHANGERS

McDERMOTT HUDSON ENGINEERING
PROJECT 2169

EQUIPMENT NUMBER	DESCRIPTION	VENDOR	PURCHASE ORDER NUMBER	BOOK NUMBER	SECTION NUMBER
*CE1 A,B,C	GLYCOL EXCHANGER	B.S. & B.	2169-48-R01-P0-002	6&7	36
CE2 A,B,C	GLYCOL AIR COOLER	CREUSOT LOIRE	2169-46-R01-P0-001	5	33
CE 3	FUELGAS EXCHANGER	JOHNSON HUNT	2169-46-R02-P0-002	5	34
*CE4 A,B,C	REFLUX CONDENSER	B.S.& B.	2169-48-R01-P0-002	6&7	36
*CE5 A&B	COMPRESSOR COOLER	COMPAIR IND.	2169-48-R02-P0-001	5& 6	35
*CH1A,B,C	GLYCOL REBOILER	B.S. & B.	2169-48-R01-P0-002	6&7	36

* ITEM COVERED IN OTHER GROUPS

X = NOT INCLUDED IN VENDOR DATA

ELF NORGE A/S
FRIGG FIELD
T.C.P - 2

VENDOR DATA VOLUME 3
TABLE OF CONTENTS BY ITEM NUMBER
GROUP 48 - PACKAGE UNITS

McDERMOTT HUDSON ENGINEERING
PROJECT 2169

EQUIPMENT NUMBER	DESCRIPTION	VENDOR	PURCHASE ORDER NUMBER	BOOK NUMBER	SECTION NUMBER
CQ1 A,B,C	GLYCOL REGENERATION UNIT	B.S. & B.	2169-48-R01-PO-002	6&7	36
CQ 3	POWER GENERATION PACK				
CQ 4	FIRE DETECTION ETC.				
CQ5 A&B	INST. & UTILITY AIR COMPRESSOR PACKAGE	COMPAIR IND.	2169-48-R02-PO-001	5 & 6	35
CQ 9	AIR CONDITIONING UNIT	V.I.M.	2169-48-R04-PO-003	7&8	37
CQ 11	WORKSHOP & STORAGE VENT & PRESSURISATION	V.I.M.	2169-48-R03-PO-004	8	38
CQ12 A&B	FIRE WATER PUMP HOUSING VENT & PRESS	V.I.M.	2169-48-R05-PO-004	8	38
CQ13	SEWAGE TREATMENT PLANT	DREXEL	2169-48-R06-PO-005	8	39
CC1 A&B	AIR COMPRESSOR	COMPAIR IND.	2169-48-R02-PO-001	5 & 6	35
CC2 A&B	AIR BLOWERS	DREXEL	2169-48-R06-PO-005	8	39

* ITEM COVERED IN OTHER GROUPS

X = NOT INCLUDED IN VENDOR DATA

ELF NORGE A/S
FRIGG FIELD
T.C.P - 2

VENDOR DATA VOLUME 3
TABLE OF CONTENTS BY ITEM NUMBER
GROUP 49 - MISC. EQUIPMENT

McDERMOTT HUDSON ENGINEERING
PROJECT 2169

EQUIPMENT NUMBER	DESCRIPTION	VENDOR	PURCHASE ORDER NUMBER	BOOK NUMBER	SECTION NUMBER
CM 1	SPHERICAL PIG RECEIVERS	EUROFILCO	2169-49-R02/3-PO-001	8	40
CM 2	SPHERICAL PIG RECEIVERS	EUROFILCO	2169-49-R02/3-PO-001	8	40
CM 3	PIG LAUNCHER	BROWN & ROOT			
CM 7	CRANE	DE ZEEUW	2169-49-R01-PO-002	8	41
CM 8	CRANE	DE ZEEUW	2169-49-R01-PO-002	8	41
CM 9	SPHERICAL PIG RECEIVERS	EUROFILCO	2169-49-R03-PO-001	8 & 9	40
CM 14	SURVIVAL CRAFT	WATERCRAFT	2169-49-R06-PO-003	9	42
CM 15	SURVIVAL CRAFT	WATERCRAFT	2169-49-R06-PO-003	9	42
CM 16A	10 TON MANUAL HOIST	VAMACO	2169-49-R07-PO-009	9	44
CM 16B	MANUAL HOIST	VAMACO	2169-49-R07-PO-010	9	45
CM 17 A&B	BURNER BOOM	NO DETAILS			
CM 18	ELECTRIC HOIST	TONNES FORCE LTD.	2169-49-R08-PO-020	10	48
CM19	MANUAL HOIST	VAMACO	2169-49-R07-PO-010	9	45
CM 20	MANUAL HOIST	VAMACO	2169-49-R07-PO-010	9	45
CM 21	MANUAL HOIST	VAMACO	2169-49-R07-PO-010	9	45
CM 22	FORK LIFT TRUCK	LANSING BAGNALL	2169-49-R10-PO-014	X	X
CM 24 A,B,C	MANUAL HOISTS	VAMACO	2169-49-R07-PO-010	9	45

* ITEM COVERED IN OTHER GROUPS

X = NOT INCLUDED IN VENDOR DATA

ELF NORGE A/S
FRIGG FIELD
T.C.P - 2

VENDOR DATA VOLUME 3
TABLE OF CONTENTS BY ITEM NUMBER
GROUP 49 - MISC.EQUIPMENT

McDERMOTT HUDSON ENGINEERING
PROJECT 2169

EQUIPMENT NUMBER	DESCRIPTION	VENDOR	PURCHASE ORDER NUMBER	BOOK NUMBER	SECTION NUMBER
CM 25	MANUAL HOIST	VAMACO	2169-49-R07-PO-010	9	45
	A60 FIRE WALLS	AARONITE LTD	2169-49-R11-PO-012	X	X
	PRECISION MEASURING EQUIPMENT-WORKSHOP	TOOL CENTRE LTD	2169-49-R12-PO-005	X	X
	WORKSHOP STORAGE EQUIPMENT	WELCONSTRUCT	2169-49-R13-PO-006	X	X
	ELECTRIC POWERED WORKSHOP EQUIPMENT	TOOL CENTRE LTD	2169-49-R14-PO-011	X	X
	VERTICAL MILLING MACHINE - WORKSHOP	BEAVER MACHINE TOOL CO.	2169-49-R15-PO-013	X	X
	HAND TOOLS & WORKSHOP EQUIPMENT	TOOL CENTRE LTD	2169-49-R16-PO-008	X	X
	LIFTING EQUIPMENT	SOWERBY WELCH	2169-49-R17-PO-007	9	43
	SAFETY EQUIPMENT	BRISTOL UNIFORMS	2169-49-R18-PO-021	10	49
	FIRE EXTINGUISHERS	A.F.A. MINERVA	2169-49-R19-PO-015	X	X
	FIRST AID KITS	J.S. CLAYTON	2169-49-R20-PO-018	X	X
	INFLATABLE LIFERAFTS	NAUTEKNIK A/S	2169-49-R21-PO-019	9	47
	LIFEBOUYS & LIFEJACKETS	NAUTEKNIK A/S	2169-49-R22-PO-016	X	X
	MANUAL HOIST TROLLIES	TONNES FORCE LTD	2169-49-R23-PO-017	9	46
	TEMPORARY ACCOMMODATION UNITS	AKER NORSCO	2169-49-R24-PO-022	10	50

* ITEM COVERED IN OTHER GROUPS

X = NOT INCLUDED IN VENDOR DATA

ELF NORGE A/S
FRIGG FIELD
T.C.P - 2

VENDOR DATA VOLUME 3
TABLE OF CONTENTS BY ITEM NUMBER
GROUP 50 - PIPING & VALVES

McDERMOTT HUDSON ENGINEERING
PROJECT 2169

EQUIPMENT NUMBER	DESCRIPTION	VENDOR	PURCHASE ORDER NUMBER	BOOK NUMBER	SECTION NUMBER
	HIGH PRESSURE LARGE BORE PIPE	FITHANDEL	2169-50-R01-P0-002	10 &11	52
	HIGH PRESSURE LARGE BORE BUTTWELD FITTINGS	TECHNITUB ITALIANA	2169-50-R02-P0-001	10	51
	FITTINGS	FITHANDEL	2169-50-R02-P0-003	11	53
	24" BUTT WELD CAP	BASSI LUIGI/SORELLI	2169-50-R02-P0-059	13	109
	HIGH PRESSURE LARGE BORE FLANGES	FITHANDEL	2169-50-R03-P0-004	11	54
	COLD SERVICE PIPE	FITHANDEL	2169-50-R04-P0-010	11	61
	COLD SERVICE BUTT WELD FITTINGS	B.K.L. ALLOYS	2169-50-R05-P0-007	11	57
	HIGH PRESSURE LARGE BORE BUTTWELD FITTINGS	FITHANDEL	2169-50-R06-P0-005	11	55
	HYDRAULIC ACTUATED BALL VALVES	MAPEGAZ	2169-50-R07-P0-066	11	56
	SP BRANCH MANIFOLDS & TEES	BROWN & ROOT SUPPLY	2169-50-R08	X	X
	POWER OPERATED BALL VALVES	BROWN & ROOT SUPPLY	2169-50-R09	X	X
	PIPE PUPS	VEROLME ENG.	2169-50-R10-P0-041	12	91
	POWER OPERATED SHUT OFF VALVE	MOKVELD B.V.	2169-50-R11-P0-060	13	110
	3" POWER OPERATED BALL VALVE	KURT KOHORN A/S	2169-50-R12-P0-077	13	127
	18" BALL VALVES & ACTUATORS	MAPEGAZ	2169-50-R13-P0-088	13	138
	THERMAL INSULATION FOR HVAC DUCTING	NEWALLS INSULATION	2169-50-R14-P0-110	X	X
	FLANGED VALVES	A.J.G. WATERS	2169-50-R21-P0-027	11	77

* ITEM COVERED IN OTHER GROUPS

X = NOT INCLUDED IN VENDOR DATA

VENDOR DATA VOLUME 3
TABLE OF CONTENTS BY ITEM NUMBER
GROUP 50, PIPING & VALVES

EQUIPMENT NUMBER	DESCRIPTION	VENDOR	PURCHASE ORDER NUMBER	BOOK NUMBER	SECTION NUMBER
	CHECK VALVE	R.BLACKETT CHARLTON	2169-50-R21-PO-032	12	82
	WAFER TYPE CHECK VALVES	MAPEGAZ	2169-50-R22-PO-018	11	68
	BALL VALVES	WORCESTER VALVES	2169-50-R23-PO-020	11	70
	BALL VALVES	MAPEGAZ	2169-50-R23-PO-021	12	71
	BALL VALVES	T.K. VALVES LTD.	2169-50-R23-PO-022	12	72
	VALVES	SAPAG	2169-50-R24-PO-023	12	73
	NEEDLE VALVES	ASHFORD CONTROLS	2169-50-R24-PO-035	12	85
	VALVES	IMEX/PAULO SORRELLI	2169-50-R24-PO-081	13	131
	GATE VALVES	VALVETEC LTD	2169-50-R24-PO-095	14	143
	FLANGED VALVES	MOIZIEUX	2169-50-R25-PO-036	12	86
	VALVES	MARCEL MALBRANQUE	2169-50-R25-PO-038	12	88
	BALL VALVES	MAPEGAZ	2169-50-R26-PO-030	12	80
	GATE VALVES	TRESS ENGINEERING	2169-50-R27-PO-033	12	83
	GATE VALVES	NEWMAN HATTERSLEY	2169-50-R27-PO-034	12	84
	PIPE	BROWN&ROOT SUPPLY	2169-50-R28	X	X
	BALL VALVES	IVCO LTD	2169-50-R29-PO-029	12	79
	FLANGES	MOIZIEUX	2169-50-R31-PO-008	11	58

* ITEM COVERED IN OTHER GROUPS

X = NOT INCLUDED IN VENDOR DATA

ELF NORGE A/S
FRIGG FIELD
T.C.P - 2

VENDOR DATA VOLUME 3
TABLE OF CONTENTS BY ITEM NUMBER
GROUP 50 - PIPING & VALVES

McDERMOTT HUDSON ENGINEERING
PROJECT 2169

EQUIPMENT NUMBER	DESCRIPTION	VENDOR	PURCHASE ORDER NUMBER	BOOK NUMBER	SECTION NUMBER
	FLANGES	BARR THOMSON	2169-50-R31-PO-009	11	59
	FITTINGS	FITHANDEL	2169-49-R32-SUPP.TO 2169-50-R06-PO-005	11	55
	BRANCH FITTINGS	BONNEY FORGE	2169-50-R33-PO-011	11	61
	GASKETS	FLEXITALIC	2169-50-R33-PO-019	11	69
	GASKETS	MOORSIDE MACHINE CO	2169-50-R33-PO-072	13	122
	GASKETS	FLEXITALIC	2169-50-R34-PO-019	11	69
	STUD BOLTS	BECK CRESPEL	2169-50-R35-PO-012	11	62
	PIPE	TROUVAY & CAUVIN	2169-50-R36-PO-017	11	67
	PIPE	FITHANDEL	2169-50-R37-PO-002	10 &1	52
	FLANGES	FITHANDEL	2169-50-R38-PO-016	11	66
	BUTTWELD FITTINGS	FITHANDEL	2169-50-R39-PO-024	12	74
	BUTTWELD FITTINGS	B.K.L. ALLOYS	2169-50-R39-PO-025	12	75
	BUTTWELD FITTINGS	TROUVAY & CAUVIN	2169-50-R39-PO-026	12	76
	SCREWED FITTINGS	WILSON PIPE FITTINGS	2169-50-R40-PO-015	11	65
	EPOXY LINED PIPE	M.M.E.	2169-50-R42-PO-013	11	63
	SPADES & SPACERS	GAS,OIL AND CONSTRUCTION	2169-50-R43-PO-014	11	64
	STUD BOLTS	BECK CRESPEL	2169-50-R44-PO-012	11	62

X = NOW INCLUDED IN VENDOR DATA

ELF NORGE A/S
FRIGG FIELD
T.C.P - 2

VENDOR DATA VOLUME 3
TABLE OF CONTENTS BY ITEM NUMBER
GROUP 50-PIPING & VALVES

McDERMOTT HUDSON ENGINEERING
PROJECT 2169

EQUIPMENT NUMBER	DESCRIPTION	VENDOR	PURCHASE ORDER NUMBER	BOOK NUMBER	SECTION NUMBER
	VALVES	MAPEGAZ	2169-50-R45-PO-028	12	78
	ORIFICE FLANGES	FITHANDEL	2169-50-R47-PO-031	12	81
	FILTER LUBRICATOR REGULATER SETS	C.A.NORGREN	2169-50-R48-PO-056	13	106
	LARGE BORE PIPE	T.A.D, PAULO SORELLI	2169-50-R49-PO-057	13	107
	LARGE BORE FLANGES	FITHANDEL	2169-50-R50-PO-050	12	100
	LARGE BORE BUTTWELD FITTINGS	MUNRO & MILLER	2169-50-R51-PO-048	12	98
	CHECK VALVES	RONA/D.W.MUNSON	2169-50-R52-PO-087	13	137
	VALVES	SCANARMATURE	2169-50-R52B-10 -040	12	90
	BALL VALVES	MAPEGAZ	2169-50-R53-PO-042	12	92
	SPADES & SPACERS	I.M.L. PAULO SORELLI	2169-50-R54-PO-047	12	97
	LARGE BORE BRANCH FITTINGS	I.M.L. PAULO SORELLI	2169-50-R55-PO-049	12	99
	LARGE BORE BRANCH FITTINGS	I.M.L. PAULO SORELLI	2169-50-R56-PO-049	12	99
	CARBON STEEL PIPE	OLSTILL PIPE FITTINGS	2169-50-R57-PO-037	12	87
	BUTTWELD FITTINGS	OLSTILL PIPE FITTINGS	2169-50-R59-PO-039	12	89
	BALL VALVES	MAPEGAZ	2169-50-R60-PO-043	12	93
	TUNGUM TUBING	TUNGUM HYDRAULICS	2169-50-R61-PO-044	12	94
	NEEDLE CONTROLS	UNIT CONTROLS	2169-50-R62-PO-046	12	96

* ITEM COVERED IN OTHER GROUPS

X = NOT INCLUDED IN VENDOR DATA

EQUIPMENT NUMBER	DESCRIPTION	VENDOR	PURCHASE ORDER NUMBER	BOOK NUMBER	SECTION NUMBER
	SWAGELOCK FITTINGS	TECHMATION LTD	2169-50-R63-PO-045	12	95
	SMALL BORE PIPE & FITTINGS	TROUVAY & CAUVIN	2169-50-R64-PO-051	12	101
	SMALL BORE PIPE & FITTINGS	TROUVAY & GAUVIN	2169-50-R65-PO-051	12	101
	BRANCH FITTINGS	BONNEY FORGE	2169-50-R66-PO-054	13	104
	FITTINGS	IML/PAULO SORELLI	2169-50-R67-PO-052	12	102
	LARGE BORE BUTTWELD FITTINGS	BASSI LUIGI/SORELLI	2169-50-R68-PO-053	13	103
	CARBON STEEL PLATE	VEROLME ENG.	2169-50-R69-PO-055	13	105
	LARGE BORE FLANGES	BARR THOMPSON	2169-50-R70-PO-058	13	108
	LARGE BORE FITTINGS	BASSI LUIGI/SORELLI	2169-50-R71-PO-069	13	119
	BUTTWELD FITTINGS	BASSI LUIGI/SORELLI	2169-50-R72-PO-064	13	114
	BRANCH FITTINGS	IML/PAULO SORELLI	2169-50-R73-PO-062	13	112
	LARGE BORE FLANGES	FITHANDEL	2169-50-R74-PO-076	13	126
	VALVES	SCANARMATUR	2169-50-R75-BO-065	13	115
	VALVES	IMEX/PAULO SORELLI	2169-50-R75-PO-081	13	131
	LARGE BORE PIPE	CTT/PAULO SORELLI	2169-50-R77-PO-067	13	117
	PIPE	TAD/PAULO SORELLI	2169-50-R78-PO-061	13	111
	BALL VALVES	T.K. VALVES LTD.	2169-50-R79-PO-068	13	118

* ITEM COVERED IN OTHER GROUPS

X = NOT INCLUDED IN VENDOR DATA

ELF NORGE A/S
FRIGG FIELD
T.C.P - 2

VENDOR DATA VOLUME 3
TABLE OF CONTENTS BY ITEM NUMBER
GROUP 50 - PIPING & VALVES

McDERMOTT HUDSON ENGINEERING
PROJECT 2169

EQUIPMENT NUMBER	DESCRIPTION	VENDOR	PURCHASE ORDER NUMBER	BOOK NUMBER	SECTION NUMBER
	SMALL BORE PIPE	LION TUBE & STEEL C(	2169-50-R80-PO-073	13	123
	SMALL BORE FLANGES	MOIZIEUX	2169-50-R81-PO-074	13	124
	STUD BOLTS	BECK CRESPEL	2169-50-R82-PO-070	13	120
	SPECTACLE BLINDS	MOIZIEUX	2169-50-R83-PO-071	13	121
	WELDING & TESTS	VEROLME ENG.	2169-50-R84-PO-066	13	116
	GATE VALVES	TROUVAY & CAUVIN	2169-50-R85-PO-075	13	125
	VALVES	OSTILL PIPE FITTINGS	2169-50-R85-PO-078	13	128
	BALL VALVES	IVCO LTD	2169-50-R86-PO-084	13	134
	BALL VALVES	KURT KOHORN A/S	2169-50-R86-PO-085	13	135
	BALL VALVES	MAPEGAZ	2169-50-R86-PO-086	13	136
	FLANGES	S.E. FLANGES	2169-50-R90-PO-082	13	132
	SWAGELOCK FITTINGS	TECHMATION LTD.	2169-50-R94-PO-089	X	X
	MULTIPORT VALVES	SERCK AUDCO VALVES	2169-50-R96-PO-090	13	139
	MULTIPORT VALVES	ROCKWELL	2169-50-R96-PO-096	14	144
	BLIND FLANGES	EUROFIT	2169-50-R97-PO-079	13	129
	BLIND FLANGES	RORHANDEL A/S	2169-50-R97-PO-080	13	130
	SWEL-PLUG TESTERS	TUBE TURNS LTD	2169-50-R101-PO-083	13	133

* ITEM COVERED IN OTHER GROUPS

X = NOT INCLUDED IN VENDOR DATA

VENDOR DATA VOLUME 3
TABLE OF CONTENTS BY ITEM NUMBER
GROUP 50 PIPING & VALVES

EQUIPMENT NUMBER	DESCRIPTION	VENDOR	PURCHASE ORDER NUMBER	BOOK NUMBER	SECTION NUMBER
	THERMAL INSULATION	NEWALLS INSULATION COMPANY	2169-50-R102-PO-091	X	X
	SMALL BORE PIPE	TROUVAY & CAUVIN	2169-50-R104-PO-104	13	142
	FITTINGS	FITHANDEL	2169-50-R105-PO-092	13	140
	FITTINGS	FITHANDEL	2169-50-R106-PO-092	13	140
	FITTINGS	I.M.L. PAULO SORELLI	2169-50-R107-PO-093	13	141
	FITTINGS	I.M.L. PAULO SORELLI	2169-50-R108-PO-093	13	141
	FLANGE PROTECTORS	McEVOY	2169-50-R112-PO-101	14	146
	FLANGED SHUTOFF VALVES	SOCOMAT	2169-50-R113-PO-102	13	147
	MULTICLAMP PIPE SUPPORTS	UCC INTERNATIONAL	2169-50-R117-PO-098	X	X
	CHAIN WHEELS & CHAINS	PREMABERG	2169-50-R123-PO-099	X	X
	STUD BOLTS	WOLVERHAMPTON ENGINEERING PRODUCTS	2169-50-R124-PO-100	14	145
	CARBON STEEL PIPE	TAD/PAULO SORELLI	2169-50-R127-PO-103	14	148
	BUTTWELD FITTINGS	BASSI LUIGI/SORELLI	2169-50-R127-PO-104	14	149
	BRANCH FITTINGS	I.M.L.PAULO SORELLI	2169-50-R127-PO-105	X	X
	GLOBE VALVES	RORHANDEL	2169-50-R127-PO-106	14	150
	CARBON STEEL PIPE	LION TUBE&STEEL.CO.	2169-50-R127-PO-107	14	151
	WELDOLETS	COPROSIDER	2169-50-R127-PO-112	14	152

* ITEM COVERED IN OTHER GROUPS

X = NOT INCLUDED IN VENDOR DATA

ELF NORGE A/S
FRIGG FIELD
T.C.P - 2

VENDOR DATA VOLUME 3
TABLE OF CONTENTS BY ITEM NUMBER
GROUP 50- PIPING & VALVES

McDERMOTT HUDSON ENGINEERING
PROJECT 2169

EQUIPMENT NUMBER	DESCRIPTION	VENDOR	PURCHASE ORDER NUMBER	BOOK NUMBER	SECTION NUMBER
	BALL VALVES	WORCESTER VALVE CO.	2169-50-R128-PO-108	X	X
	BALL VALVES	PEGLER & LOUDEN	2169-50-R128-PO-109	X	X
	PIPE & FITTINGS	TROUVAY & CAUVIN	2169-50-R130-PO-113	14	153
	FLANGES	FITHANDEL	2169-50-R130-PO-114	14	154
	CARBON STEEL FITTINGS	RORHANDEL	2169-50-R132-PO-111	X	X
	MISCELLANEOUS MATERIAL	TEKNISK	2169-50-R134-PO-115	14	155

* ITEM COVERED IN OTHER GROUPS

X = NOT INCLUDED IN VENDOR DATA

ELF NORGE A/S
FRIGG FIELD
T.C.P - 2

VENDOR DATA VOLUME 3
TABLE OF CONTENTS BY ITEM NUMBER
GROUP 51-PIPING (MISCELLANEUS)

McDERMOTT HUDSON ENGINEERING
PROJECT 2169
PAGE 62 OF

EQUIPMENT NUMBER	DESCRIPTION	VENDOR	PURCHASE ORDER NUMBER	BOOK NUMBER	SECTION NUMBER
CSP1	BUBBLE CAP TRAYS	B.S.L.	2169-51-R01-P0-001	14	156
CSP2	VANE TYPE MIST EXTRACTOR	PREMABERG	2169-51-R02-P0-002	14	157
CSPA *	AIR FILTER LUBRICATOR REGULATOR SET	C.A.NORGREN	2169-50-R48-P0-056	13	106
CSP10,B,C, D,E,H,J,&T	FLEXIBLE HOSES	COMPOFLEX	2169-51-R06-P0-016	14	169
CSP14 A,B,C D,E,F,G,H,J	IN LINE STRAINERS	FILTRATION & VALVES	2169-51-R04-P0-003	14	158
CSP15 A&B	IN LINE STRAINERS	FILTRATION & VALVES	2169-51-R04-P0-003	14	158
CSP16 A,B,C,D,&E	VENT FILTERS	VESTEC LTD	2169-51-R07-P0-004	14	159
CSP17	SILENCER	AIROIL FRANCAISE	2169-51-R11-P0-008	14	162
CSP24	GAS SEAL/VENT STACK	JOHN ZINK	2169-51-R09-P0-007	14	161
CSP28	CENTRALISERS	SEA OIL HOMCO	2169-51-R22-P0-012	X	X
CSP30	BACK UP NITROGEN BOTTLES	AIR PRODUCTS	2169-51-R24-P0-018	14	170
CSP32	PADLOCKS	FERGUSON RAMSEY	2169-51-R17-P0-005	13	160
CSP33	CHAINS	FERGUSON RAMSEY	2169-51-R17-P0-005	14	160
CSP35	MANWAY ADAPTOR	VESTEC LTD.	2169-51-R20-P0-006	X	X
	FIRE MONITOR	NORSK HAMMERVERK	2169-51-R13-P0-009	14	163
	SPRINKLERS	NORSK SPRINKLER	2169-51-R14-P0-014	14	167

* ITEM COVERED IN OTHER GROUPS

X = NOT INCLUDED IN VENDOR DATA

ELF NORGE A/S
FRIGG FIELD
T.C.P - 2

VENDOR DATA VOLUME 3
TABLE OF CONTENTS BY ITEM NUMBER
GROUP 51 - PIPING (MISCELLANEOUS)

McDERMOTT HUDSON ENGINEERING
PROJECT 2169

EQUIPMENT NUMBER	DESCRIPTION	VENDOR	PURCHASE ORDER NUMBER	BOOK NUMBER	SECTION NUMBER
	FIRE HOSE REELS	NORSK HAMMERVERK	2169-51-R16-PO-010	14	164
	WASHDOWN HOSES & REELS	NORSK HAMMERVERK	2169-51-R18-PO-011	14	165
	QUICK CONNECT HOSE COUPLINGS	NORSK HAMMERVERK	2169-51-R19-PO-013	14	166
	STUDS & BOLTS	ARNOLD WRAGG	2169-51-R27-PO-015	14	167
	SLIDE BEARING ASSEMBLY	FLUOROCARBON	2169-51-R28-PO-019	X	X
	NON STRUCTURAL MILD STEEL PLATE	SALZGITTER	2169-51-R30-PO-017	X	X
	'U' BOLTS	D.B. ENFIELD	2169-51-R31-PO-021	X	X
	NON STRUCTURAL MILD STEEL SHAPES	G.K.N. STEELSTOCK	2169-51-R33-PO-020	14	171

* ITEM COVERED IN OTHER GROUPS

X = NOT INCLUDED IN VENDOR DATA

EQUIPMENT NUMBER	DESCRIPTION	VENDOR	PURCHASE ORDER NUMBER	BOOK NUMBER	SECTION NUMBER
TA4	GAS TURBINE ALTERNATOR	KONGSBERG/P.PEEBLES	2169-60-R01-P0-001	14	172
TA5	GAS TURBINE ALTERNATOR	KONGSBERG/P.PEEBLES	2169-60-R01-P0-001	14	172
TA6	GAS TURBINE ALTERNATOR	KONGSBERG/P.PEEBLES	2169-60-R01-P0-001	14	172
TCP2 5000	5.5KV SWITCHGEAR	PARSONS PEEBLES	2169-60-R02-P0-002	14 to 17	173
TCP2 380	380 KV SWITCHGEAR	PARSONS PEEBLES	2169-60-R02-P0-002	14 to 17	173
T4	5500/380V IMVA TRANSFORMER	PARSONS PEEBLES	2169-60-R02-P0-002	14 to 17	173
T5	5500/380V IMVA TRANSFORMER	PARSONS PEEBLES	2169-60-R02-P0-002	14 to 17	173
EM31	NEUTRAL EARTH RESISTOR	PARSONS PEEBLES	2169-60-R02-P0-002	14 to 17	173
EM32	NEUTRAL EARTH RESISTOR	PARSONS PEEBLES	2169-60-R02-P0-002	14 to 17	173
EM33	NEUTRAL EARTH RESISTER	PARSONS PEEBLES	2169-60-R02-P0-002	14 to 17	173
EM34	CONTROL CONSOLE	PARSONS PEEBLES	2169-60-R02-P0-002	14 to 17	173
EM35	CONTROL CONSOLE	PARSONS PEEBLES	2169-60-R02-P0-002	14 to 17	173
EM36	MIMIC PANEL	PARSONS PEEBLES	2169-60-R02-P0-002	14to 17	173
EM/37/4	TURBINE CONTROL CABINET (T4)	KONGSBERG/P.PEEBLES	2169-60-R01-P0-001	14	172

* ITEM COVERED IN OTHER GROUPS

X = NOT INCLUDED IN VENDOR DATA

EQUIPMENT NUMBER	DESCRIPTION	VENDOR	PURCHASE ORDER NUMBER	BOOK NUMBER	SECTION NUMBER
B42	SEE GROUP 65- BATTERY SYSTEMS				
B43	SEE GROUP 65- BATTERY SYSTEMS				
B44	SEE GROUP 65- BATTERY SYSTEMS				
B45	SEE GROUP 65- BATTERY SYSTEMS				
B46	SEE GROUP 67- NAV.AIDS				
B47	SEE GROUP 67- NAV.AIDS				
B48	SYMINEX CHARGER/ INVERTER	PARSONS PEEBLES	2169-60-R02-PO-002	14 to 17	173
B49	SYMINEX BATTERY	PARSONS PEEBLES	2169-60-R02-PO-002	14 to 17	173
M.B.4	MARSHALLING BOX (TA4)	KONGSBERG/P.PEEBLES	2169-60-R01-PO-001	14	172
M.B.5	MARSHALLING BOX (TA5)	KONGSBERG/P.PEEBLES	2169-60-R01-PO-001	14	172
M.B.6	MARSHALLING BOX (TA6)	KONGSBERG/P.PEEBLES	2169-60-R01-PO-001	14	172
DB-301	LIGHTING & 24V SOCKET OUTLET DISTRIB	PARSONS PEEBLES	2169-60-R02-PO-002	14 to 17	173
DB-302	NORMAL LIGHTING DISTRIBUTION	PARSONS PEEBLES	2169-60-R02-PO-002	14to 17	173
DB-303	220V SMALL POWER DISTRIBUTION	PARSONS PEEBLES	2169-60-R02-PO-002	14 to17	173
DB-304	380/220V BATTERY CHARGER DISTRIBUTION	PARSONS PEEBLES	2169-60-R02-PO-002	14 to 17	173

EQUIPMENT NUMBER	DESCRIPTION	VENDOR	PURCHASE ORDER NUMBER	BOOK NUMBER	SECTION NUMBER
DB 305	GENERATOR BUILDING, LIGHTING & SMALL POWER DISTRIBUTION	PARSONS PEEBLES	2169-60-R02-PO-002	14 to 17	173
DB 306	SEE GROUP 64 - DISTRIBUTION SYSTEMS				
DB 307	SEE GROUP 64 - DISTRIBUTION SYSTEMS				
DB 308	SEE GROUP 64 - DISTRIBUTION SYSTEMS				
DB 309	SEE GROUP 64 - DISTRIBUTION SYSTEMS				
DB 310	SEE GROUP 64 - DISTRIBUTION SYSTEMS				
DB 311	SEE GROUP 64 - DISTRIBUTION SYSTEMS				
MC 10	MARSHALLING & RELAY BOX	PARSONS PEEBLES	2169-60-R02-PO-002	14 to 17	173
RB 2	WASHDOWN PUMP RELAY PANEL	PARSONS PEEBLES	2169-60-R02-PO-002	14 to 17	173
RB 3	CONDENSATE SYSTEM RELAY PANEL	PARSONS PEEBLES	2169-60-R02-PO-002	14 to 17	173
RB 5	A/C RELAY PANEL	PARSONS PEEBLES	2169-60-R02-PO-002	14 to 17	173
RB 6	A/C RELAY PANEL	PARSONS PEEBLES	2169-60-R02-PO-002	14 to 17	173
RB 7	A/C RELAY PANEL	PARSONS PEEBLES	2169-60-R02-PO-002	14 to 17	173
ECP1	A/C CONTROL PANEL	PARSONS PEEBLES	2169-60-R02-PO-002	14to 17	173

EQUIPMENT NUMBER	DESCRIPTION	VENDOR	PURCHASE ORDER NUMBER	BOOK NUMBER	SECTION NUMBER
FM 4	FUEL MODULE FOR TA4	KONGSBERG/P.PEEBLES	2169-60-R01-P0-001	14	172
FM 5	FUEL MODULE FOR TA5	KONGSBERG/P.PEEBLES	2169-60-R01-P0-001	14	172
FM 6	FUEL MODULE FOR TA6	KONGSBERG/P.PEEBLES	2169-60-R01-P0-001	14	172
A1	60 AMP TP CONTRACTOR	PARSONS PEEBLES	2169-60-R02-P0-002	14 to 17	173
A2	60 AMP TP CONTRACTOR	PARSONS PEEBLES	2169-60-R02-P0-002	14 to 17	173
A3	20 HP STARTER	PARSONS PEEBLES	2169-60-R02-P0-002	14 to 17	173
A4	60 AMP TP & N MCC BOARD	PARSONS PEEBLES	2160-60-R02-P0-002	14 to 17	173
B1	10 HP STARTER	PARSONS PEEBLES	2169-60-R02-P0-002	14 to 17	173
B2	15 AMP DP CONTACTOR (SINGLE PHASE L&N	PARSONS PEEBLES	2169-60-R02-P0-002	14 to 17	173
B3	SUITABLE FOR 10 HP STARTER (SPARE)	PARSONS PEEBLES	2169-60-R02-P0-002	14 to 17	173
B4	57.5 HP STARTER	PARSONS PEEBLES	2169-60-R02-P0-002	14 to 17	173
B5	10 HP STARTER	PARSONS PEEBLES	2169-60-R02-P0-002	14 to 17	173
B6	16.5 HP STARTER	PARSONS PEEBLES	2169-60-R02-P0-002	14 to 17	173
C1	20 HP STARTER	PARSONS PEEBLES	2169-60-R02-P0-002	14 to 17	173
C2	100 AMP 4 POLE MCC BOARD WITH SHUNT TRIP	PARSONS PEEBLES	2169-60-R02-P0-002	14 to 17	173
C3	200 AMP CONTACTOR	PARSONS PEEBLES	2169-60-R02-P0-002	14 to 17	173

EQUIPMENT NUMBER	DESCRIPTION	VENDOR	PURCHASE ORDER NUMBER	BOOK NUMBER	SECTION NUMBER
C 4	55 HP STARTER	PARSONS PEEBLES	2169-60-R02-P0-002	14 to 17	173
D 1	MARSHALLING CUBICLE	PARSONS PEEBLES	2169-60-R02-P0-002	14 to 17	173
E 1	150 AMP 4 POLE MCC BOARD	PARSONS PEEBLES	2169-60-R02-P0-002	14 to 17	173
E 2	300 AMP CONTACTOR	PARSONS PEEBLES	2169-60-R02-P0-002	14 to 17	173
F 1	103 HP STARTER	PARSONS PEEBLES	2169-60-R02-P0-002	14 to 17	173
F 2	88 HP STARTER	PARSONS PEEBLES	2169-60-R02-P0-002	14 to 17	173
G 1	60 AMP TP CONTACTOR	PARSONS PEEBLES	2169-60-R02-P0-002	14 to 17	173
G 2	40 HP STARTER	PARSONS PEEBLES	2169-60-R02-P0-002	14 to 17	173
G 3	50 HP STARTER	PARSONS PEEBLES	2169-60-R02-P0-002	14 to 17	173
H 1	10 HP STARTER 2.75 HP O/L	PARSONS PEEBLES	2169-60-R02-P0-002	14 to 17	173
H 2	10 HP STARTER	PARSONS PEEBLES	2169-60-R02-P0-002	14 to 17	173
H 3	15 AMP TP & N CONTACTOR	PARSONS PEEBLES	2169-60-R02-P0-002	14 to 17	173
H 4	20 HP STARTER	PARSONS PEEBLES	2169-60-R02-P0-002	14 to 17	173
H 5	100 HP STARTER	PARSONS PEEBLES	2169-60-R02-P0-002	14 to 17	173
J 1	35 HP STARTER	PARSONS PEEBLES	2169-60-R02-P0-002	14 to 17	173
J 2	20 HP STARTER	PARSONS PEEBLES	2169-60-R02-P0-002	14 to 17	173
J 3	100 HP STARTER	PARSONS PEEBLES	2169-60-R02-P0-002	14 to 17	173

EQUIPMENT NUMBER	DESCRIPTION	VENDOR	PURCHASE ORDER NUMBER	BOOK NUMBER	SECTION NUMBER
K 1	60 HP STARTER 57.5 - HP O/L	PARSONS PEEBLES	2169-60-R02-PO-002	14 to 17	173
K 2	100 HP STARTER	PARSONS PEEBLES	2169-60-R02-PO-002	14 to 17	173
L 1	10 HP STARTER	PARSONS PEEBLES	2169-60-R02-PO-002	14 to 17	173
L 2	3 HP STARTER	PARSONS PEEBLES	2169-60-R02-PO-002	14 to 17	173
L 3	4 HP STARTER	PARSONS PEEBLES	2169-60-R02-PO-002	14 to 17	173
L 4	5.5 HP STARTER	PARSONS PEEBLES	2169-60-R02-PO-002	14 to 17	173
L 5	10 HP STARTER 2.75 HP O/L	PARSONS PEEBLES	2169-60-R02-PO-002	14 to 17	173
L 6	5.5 HP STARTER	PARSONS PEEBLES	2169-60-R02-PO-002	14 to 17	173
L 7	3P & N TRANSFORMER	PARSONS PEEBLES	2169-60-R02-PO-002	14 to 17	173
M 1	20 HP STARTER	PARSONS PEEBLES	2169-60-R02-PO-002	14 to 17	173
M 2	30 AMP D.P. CONTRACTOR	PARSONS PEEBLES	2169-60-R02-PO-002	14 to 17	173
M 3	40 HP STARTER	PARSONS PEEBLES	2169-60-R02-PO-002	14 to 17	173
M 4	100 AMP CONTACTOR	PARSONS PEEBLES	2169-60-R02-PO-002	14 to 17	173
N 1	300 AMP CONTACTOR WITH 250 AMP FUSE LINKS	PARSONS PEEBLES	2169-60-R02-PO-002	14 to 17	173
N 2	75 HP STARTER	PARSONS PEEBLES	2169-60-R02-PO-002	14 to 17	173
O 1	150 HP STARTER	PARSONS PEEBLES	2169-60-R02-PO-002	14 to 17	173
P 1	134 HP STARTER	PARSONS PEEBLES	2169-60-R02-PO-002	14 to 17	173

EQUIPMENT NUMBER	DESCRIPTION	VENDOR	PURCHASE ORDER NUMBER	BOOK NUMBER	SECTION NUMBER
Q 1	134 HP STARTER	PARSONS PEEBLES	2169-60-R02-P0-002	14 to 17	173
R 1	134 HP STARTER	PARSONS PEEBLES	2169-60-R02-P0-002	14 to 17	173
S 1	150 HP STARTER	PARSONS PEEBLES	2169-60-R02-P0-002	14 to 17	173
T 1	INCOMING 1600 AMP T.P. CIRCUIT BREAKER	PARSONS PEEBLES	2169-60-R02-P0-002	14 to17	173
U 1	2500 AMP TP BUS SECTION SWITCH	PARSONS PEEBLES	2169-60-R02-P0-002	14 to 17	173
V 1	INCOMING 1600 AMP TP CIRCUIT	PARSONS PEEBLES	2169-60-R02-P0-002	14 to 17	173
W 1	150 HP STARTER	PARSONS PEEBLES	2169-60-R02-P0-002	14 to 17	173
X 1	134 HP STARTER	PARSONS PEEBLES	2169-60-R02-P0-002	14 to 17	173
Y 1	134 HP STARTER	PARSONS PEEBLES	2169-60-R02-P0-002	14 to 17	173
Z 1	134 HP STARTER	PARSONS PEEBLES	2169-60-R02-P0-002	14 to 17	173
AA 1	10 HP STARTER	PARSONS PEEBLES	2169-60-R02-P0-002	14 to 17	173
AA 2	4 HP STARTER	PARSONS PEEBLES	2169-60-R02-P0-002	14 to 17	173
AA 3	3 HP STARTER	PARSONS PEEBLES	2169-60-R02-P0-002	14 to 17	173
AA 4	5 HP STARTER	PARSONS PEEBLES	2169-60-R02-P0-002	14 to 17	173
AA 5	5.5 HP STARTER	PARSONS PEEBLES	2169-60-R02-P0-002	14 to 17	173
AA 6	5.5 HP STARTER	PARSONS PEEBLES	2169-60-R02-P0-002	14 to 17	173

EQUIPMENT NUMBER	DESCRIPTION	VENDOR	PURCHASE ORDER NUMBER	BOOK NUMBER	SECTION NUMBER
AA 7	3P & N TRANSFORMER	PARSONS PEEBLES	2169-60-R02-P0-002	14 to 17	173
AB 1	20 HP STARTER	PARSONS PEEBLES	2169-60-R02-P0-002	14 to 17	173
AB 2	20 HP STARTER	PARSONS PEEBLES	2169-60-R02-P0-002	14 to 17	173
AB 3	30 AMP DP CONTRACTOR	PARSONS PEEBLES	2169-60-R02-P0-002	14 to 17	173
AB 4	100 HP STARTER	PARSONS PEEBLES	2169-60-R02-P0-002	14 to 17	173
AC 1	20 HP STARTER	PARSONS PEEBLES	2169-60-R02-P0-002	14 to 17	173
AC 2	30 AMP CONTACTOR	PARSONS PEEBLES	2169-60-R02-P0-002	14 to 17	173
AC 3	12.5. HP STARTER	PARSONS PEEBLES	2169-60-R02-P0-002	14 to 17	173
AC 4	30 AMP DP MCC BOARD WITH SHUNT TRIP	PARSONS PEEBLES	2169-60-R02-P0-002	14 to 17	173
AC 5	90 HP STARTER	PARSONS PEEBLES	2169-60-R02-P0-002	14 to 17	173
AD 1	10 HP STARTER 2.75. HP O/L	PARSONS PEEBLES	2169-60-R02-P0-002	14 to 17	173
AD 2	10 HP STARTER	PARSONS PEEBLES	2169-60-R02-P0-002	14 to 17	173
AD 3	10 HP STARTER 0.75 HP O/L	PARSONS PEEBLES	2169-60-R02-P0-002	14 to 17	173
AD 4	20 HP STARTER	PARSONS PEEBLES	2169-60-R02-P0-002	14 to 17	173
AD 5	100 HP STARTER	PARSONS PEEBLES	2169-60-R02-P0-002	14 to 17	173
AE 1	60 AMP TP CONTACTOR	PARSONS PEEBLES	2169-60-R02-P0-002	14 to 17	173
AE 2	60 AMP TP CONTACTOR	PARSONS PEEBLES	2169-60-R02-P0-002	14 to 17	173

EQUIPMENT NUMBER	DESCRIPTION	VENDOR	PURCHASE ORDER NUMBER	BOOK NUMBER	SECTION NUMBER
AE3	40 HP STARTER	PARSONS PEEBLES	2169-60-R02-P0-002	14 to 17	173
AF1	10 HP STARTER 0.75 HP O/L	PARSONS PEEBLES	2169-60-R02-P0-002	14 to 17	173
AF2	10HP STARTER 0.75	PARSONS PEEBLES	2169-60-R02-P0-002	14 to 17	173
AF3	10 HP STARTER	PARSONS PEEBLES	2169-60-R02-P0-002	14 to 17	173
AF4	200 A CONTACTOR	PARSONS PEEBLES	2169-60-R02-P0-002	14 to 17	173
AF5	60 AMP 4 POLE MCC BOARD WITH SHUNT TRIP	PARSONS PEEBLES	2169-60-R02-P0-002	14 to 17	173
AF6	60 AMP 4 POLE MCC BOARD WITH SHUNT TRIP	PARSONS PEEBLES	2169-60-R02-P0-002	14 to 17	173
AG1	100 AMP TP&N MCC BOARD	PARSONS PEEBLES	2169-60-R02-P0-002	14 to 17	173
AG2	20 AMP TP MCC BOARD	PARSONS PEEBLES	2169-60-R02-P0-002	14 to 17	173
AG3	200 AMP CONTACTOR FITTED WITH 150A HRC	PARSONS PEEBLES	2169-60-R02-P0-002	14 to 17	173
AG4	200 AMP CONTACTOR	PARSONS PEEBLES	2169-60-R02-P0-002	14 to 17	173
AH1	10 HP STARTER	PARSONS PEEBLES	2169-60-R02-P0-002	14 to 17	173
AH2	10 HP STARTER	PARSONS PEEBLES	2169-60-R02-P0-002	14 to 17	173
AH3	10 HP STARTER	PARSONS PEEBLES	2169-60-R02-P0-002	14 to 17	173
AH4	100 AMP TP&N MCC BOARD	PARSONS PEEBLES	2169-60-R02-P0-002	14 to 17	173
AH5	60 HP STARTER 57-5 O/L	PARSONS PEEBLES	2169-60-R02-P0-002	14 to 17	173
AJ1	10 HP STARTER	PARSONS PEEBLES	2169-60-R02-P0-002	14 to 17	173

EQUIPMENT NUMBER	DESCRIPTION	VENDOR	PURCHASE ORDER NUMBER	BOOK NUMBER	SECTION NUMBER
AJ2	10 HP STARTER	PARSONS PEEBLES	2169-60-R02-P0-002	14 to 17	173
AJ3	20 AMP TP CONTACTOR	PARSONS PEEBLES	2169-60-R02-P0-002	14 to 17	173
AJ4	15 AMP DP CONTACTOR	PARSONS PEEBLES	2169-60-R02-P0-002	14 to 17	173
AJ5	15 AMP CONTACTOR	PARSONS PEEBLES	2169-60-R02-P0-002	14 to 17	173
AJ6	15 AMP CONTACTOR	PARSONS PEEBLES	2169-60-R02-P0-002	14 to 17	173
AJ7	10 HP STARTER	PARSONS PEEBLES	2169-60-R02-P0-002	14 to 17	173
AJ8	16-5 HP STARTER	PARSONS PEEBLES	2169-60-R02-P0-002	14 to 17	173
AK1	100 AMP CONTACTOR	PARSONS PEEBLES	2169-60-R02-P0-002	14 to 17	173
AK2	20 HP STARTER	PARSONS PEEBLES	2169-60-R02-P0-002	14 to 17	173
AK3	88 HP STARTER	PARSONS PEEBLES	2169-60-R02-P0-002	14 to 17	173
AL1	10 HP STARTER 6.8. HP O/L	PARSONS PEEBLES	2169-60-R02-P0-002	14 to 17	173
AL2	10 HP STARTER 0.15 HP O/L	PARSONS PEEBLES	2169-60-R02-P0-002	14 to 17	173
AL3	15 AMP CONTACTOR DP(SINGLE PHASE L&N)	PARSONS PEEBLES	2169-60-R02-P0-002	14 to 17	173
AL4	15 AMP CONTACTOR DP(SINGLE PHASE L&N)	PARSONS PEEBLES	2169-60-R02-P0-002	14 to 17	173
AL5	SUITABLE FOR 10.HP STARTER	PARSONS PEEBLES	2169-60-R02-P0-002	14 to 17	173
AL6	SUITABLE FOR 10.HP STARTER	PARSONS PEEBLES	2169-60-R02-P0-002	14 to 17	173
AL7	200 AMP CONTACTOR WITH 150 FUSE LINKS	PARSONS PEEBLES	2169-60-R02-P0-002	14 to 17	173

ELF NORGE A/S
FRIGG FIELD
T.C.P - 2

VENDOR DATA VOLUME 3
TABLE OF CONTENTS BY ITEM NUMBER
GROUP 60 ELECTRICAL

McDERMOTT HUDSON ENGINEERING
PROJECT 2169

EQUIPMENT NUMBER	DESCRIPTION	VENDOR	PURCHASE ORDER NUMBER	BOOK NUMBER	SECTION NUMBER
AM1	10 HP STARTER	PARSONS PEEBLES	2169-60-R02-P0-002	14 to 17	173
AM2	10 HP STARTER	PARSONS PEEBLES	2169-60-R02-P0-002	14 to 17	173
AM3	15 AMP DP CONTACTOR	PARSONS PEEBLES	2169-60-R02-P0-002	14 to 17	173
AM4	60 AMP TP&N MCC BOARD	PARSONS PEEBLES	2169-60-R02-P0-002	14 to 17	173
AM5	20 HP STARTER	PARSONS PEEBLES	2169-60-R02-P0-002	14 to 17	173
AM6	57.5 HP STARTER	PARSONS PEEBLES	2169-60-R02-P0-002	14 to 17	173
AN1	MARSHALLING CUBICLE	PARSONS PEEBLES	2169-60-R02-P0-002	14 to 17	173
AP1	60 AMP TP CONTACTOR	PARSONS PEEBLES	2169-60-R02-P0-002	14 to 17	173
AP2	60 AMP TP CONTACTOR	PARSONS PEEBLES	2169-60-R02-P0-002	14 to 17	173
AP3	60 AMP TP CONTACTOR	PARSONS PEEBLES	2169-60-R02-P0-002	14 to 17	173
AQ1	0.75 HP STARTER	PARSONS PEEBLES	2169-60-R02-P0-002	14 to 17	173
AQ2	0.75 HP STARTER	PARSONS PEEBLES	2169-60-R02-P0-002	14 to 17	173
AQ3	0.75 HP STARTER	PARSONS PEEBLES	2169-60-R02-P0-002	14 to 17	173
AQ4	0.75 HP STARTER	PARSONS PEEBLES	2169-60-R02-P0-002	14 to 17	173
AQ5	0.75 HP STARTER	PARSONS PEEBLES	2169-60-R02-P0-002	14 to 17	173
AQ6	0.75 HP STARTER	PARSONS PEEBLES	2169-60-R02-P0-002	14 to 17	173
AQ7	20 HP STARTER	PARSONS PEEBLES	2169-60-R02-P0-002	14 to 17	173

* ITEM COVERED IN OTHER GROUPS

X = NOT INCLUDED IN VENDOR DATA

ELF NORGE A/S
FRIGG FIELD
T.C.P - 2

VENDOR DATA VOLUME 3
TABLE OF CONTENTS BY ITEM NUMBER
GROUP 60 - ELECTRICAL

McDERMOTT HUDSON ENGINEERING
PROJECT 2169

EQUIPMENT NUMBER	DESCRIPTION	VENDOR	PURCHASE ORDER NUMBER	BOOK NUMBER	SECTION NUMBER
AQ8	20 HP STARTER	PARSONS PEEBLES	2169-60-R02-PO-002	14 to 17	173
AR1	0.75 HP STARTER (SPARE)	PARSONS PEEBLES	2169-60-R02-PO-002	14 to 17	173
AR2	0.75 HP STARTER (SPARE)	PARSONS PEEBLES	2169-60-R02-PO-002	14 to 17	173
AR3	10 HP STARTER (SPARE)	PARSONS PEEBLES	2169-60-R02-PO-002	14 to 17	173
AR4	15 AMP DP CONTACTOR(SINGLE PHASE L&N)	PARSONS PEEBLES	2169-60-R02-PO-002	14 to 17	173
AR5	15 AMP DP CONTACTOR(SINGLE PHASE L&N)	PARSONS PEEBLES	2169-60-R02-PO-002	14 to 17	173
AR6	15 AMP CONTACTOR	PARSONS PEEBLES	2169-60-R02-PO-002	14 to 17	173
AR7	10 HP STARTER WITH 6.8. HP O/L	PARSONS PEEBLES	2169-60-R02-PO-002	14 to 17	173
AR8	10 HP STARTER WITH 0.15 HP O/L	PARSONS PEEBLES	2169-60-R02-PO-002	14 to 17	173
AR9	15 AMP DP CONTACTOR(PHASES R&Y)	PARSONS PEEBLES	2169-60-R02-PO-002	14 to 17	173
AS1	15 AMP CONTACTOR	PARSONS PEEBLES	2169-60-R02-PO-002	14 to 17	173
AS2	15 AMP CONTACTOR	PARSONS PEEBLES	2169-60-R02-PO-002	14 to 17	173
AS3	15 AMP CONTACTOR	PARSONS PEEBLES	2169-60-R02-PO-002	14 to 17	173
AS4	60 AMP TP CONTACTOR	PARSONS PEEBLES	2169-60-R02-PO-002	14 to 17	173
AS5	60 AMP 4 POLE MCC BOARD WITH SHUNT TRIP	PARSONS PEEBLES	2169-60-R02-PO-002	14 to 17	173
AS6	100 AMP TP&N MCC BOARD	PARSONS PEEBLES	2169-60-R02-PO-002	14 to 17	173

* ITEM COVERED IN OTHER GROUPS

X = NOT INCLUDED IN VENDOR DATA

ELF NORGE A/S
FRIGG FIELD
T.C.P - 2

VENDOR DATA VOLUME 3
TABLE OF CONTENTS BY ITEM NUMBER
GROUP 64 - ELECTRICAL DISTRIBUTION SYSTEMS

McDERMOTT HUDSON ENGINEERING
PROJECT 2169

EQUIPMENT NUMBER	DESCRIPTION	VENDOR	PURCHASE ORDER NUMBER	BOOK NUMBER	SECTION NUMBER
DB 306	SWITCHGEAR DISTRIBUTION (110V D.C.)	REES SWITCHGEAR	2169-64-R02-PO-004	17	176
DB 307	WORKSHOP POWER DISTRIBUTION	REES SWITCHGEAR	2169-64-R02-PO-004	17	176
DB 308	EMERGENCY DISTRIBUTION	HUSBANDS SHIPYARDS	2169-64-R01/2-PO-00	17	175
DB 309	INSTRUMENT DISTRIBUTION (220V. A.C. NO BREAK)	REES SWITCHGEAR	2169-64-R02-PO-004	17	176
DB 310	INSTRUMENT DISTRIBUTION (24V D.C. NO BREAK)	REES SWITCHGEAR	2169-64-R02-PO-004	17	176
DB 311	INSTRUMENT DISTRIBUTION (220V. A.C.)	REES SWITCHGEAR	2169-64-R02-PO-004	17	176

* ITEM COVERED IN OTHER GROUPS

X = NOT INCLUDED IN VENDOR DATA

ELF NORGE A/S
FRIGG FIELD
T.C.P - 2

VENDOR DATA VOLUME 3
TABLE OF CONTENTS BY ITEM NUMBER
GROUP 65 - ELECTRICAL BATTERY SYSTEM

McDERMOTT HUDSON ENGINEERING
PROJECT 2169

EQUIPMENT NUMBER	DESCRIPTION	VENDOR	PURCHASE ORDER NUMBER	BOOK NUMBER	SECTION NUMBER
B 39	220V INSTRUMENT SUPPLY BATTERY CHARGER	A.E.G.TELEFUNKEN	2169-65-R01-P0-001	17	177
B 40	220V INSTRUMENT SUPPLY STATIC SWITCH	A.E.G. TELEFUNKEN	2169-65-R01-P0-001	17	177
B 41	220V INSTRUMENP SUPPLY INVERTER	A.E.G. TELEFUNKEN	2169-65-R01-P0-001	17	177
B 42	220V INSTRUMENT SUPPLY BATTERY (110V)	A.E.G. TELEFUNKEN	2169-65-R01-P0-001	17	177
B 43	24V INSTRUMENT SUPPLY RECTIFIER CHARGER	A.E.G. TELEFUNKEN	2169-65-R01-P0-001	17	177
B 44	24V INSTRUMENT SUPPLY RECTIFIER CHARGER	A.E.G. TELEFUNKEN	2169-65-R01-P0-001	17	177
B45	24V INSTRUMENT SUPPLY BATTERY	A.E.G. TELEFUNKEN	2169-65-R01-P0-001	17	177
S 31	ISOLATING SWITCH FOR B 31	SIMPLEX G.E.	2169-65-R03-P0-003	17	179
S 32	ISOLATING SWITCH FOR B 32	SIMPLEX G.E.	2169-65-R03-P0-003	17	179
S 34	ISOLATING SWITCH FOR B 34	SIMPLEX G.E.	2169-65-R03-P0-003	17	179
S 35	ISOLATING SWITCH FOR B 36	SIMPLEX G.E.	2169-65-R03-P0-003	17	179
S 36	ISOLATING SWITCH FOR B 38	SIMPLEX G.E.	2169-65-R03-P0-003	17	179
S 42	ISOLATING SWITCH FOR B 42	SIMPLEX G.E.	2169-65-R03-P0-003	17	179
S 45/1 & 2	ISOLATING SWITCHES FOR B 45	SIMPLEX G.E.	2169-65-R03-P0-003	17	179
S 47	ISOLATING SWITCH FOR B 47	SIMPLEX G.E.	2169-65-R03-P0-003	17	179
S 49	ISOLATING SWITCH FOR B 49	SIMPLEX G.E.	2169-65-R03-P0-003	17	179

* ITEM COVERED IN OTHER GROUPS

X = NOT INCLUDED IN VENDOR DATA

ELF NORGE A/S
FRIGG FIELD
T.C.P - 2

VENDOR DATA VOLUME 3
TABLE OF CONTENTS BY ITEM NUMBER
GROUP 67-ELECTRICAL NAVIGATIONAL SYSTEM

McDERMOTT HUDSON ENGINEERING
PROJECT 2169

EQUIPMENT NUMBER	DESCRIPTION	VENDOR	PURCHASE ORDER NUMBER	BOOK NUMBER	SECTION NUMBER
B46	NAVIGATIONAL AID BATTERY CHARGER	WALLACE & TIERNAN	2169-67-R01-PO-001	18	184
B47	NAVIGATIONAL AID BATTERY	WALLACE & TIERNAN	2169-67-R01-PO-001	18	184

* ITEM COVERED IN OTHER GROUPS

X = NOT INCLUDED IN VENDOR DATA

ELF NORGE A/S
FRIGG FIELD
T.C.P - 2

VENDOR DATA VOLUME 3
TABLE OF CONTENTS BY ITEM NUMBER
GROUP 69 ELECTRICAL MISCELLANEOUS

McDERMOTT HUDSON ENGINEERING
PROJECT 2169

EQUIPMENT NUMBER	DESCRIPTION	VENDOR	PURCHASE ORDER NUMBER	BOOK NUMBER	SECTION NUMBER
1A	OUTLET	MARTIN & LUNEL	2169-69-R11/12/13 P0-010	18	191
1B	OUTLET	MARTIN & LUNEL	2169-69-R11/12/13 P0-010	18	191
2A	OUTLET	BROWN & BOVERI	2169-69-R16-P0-011	18	192
2B	OUTLET	MARTIN & LUNEL	2169-69-R11/12/13 P0-010	18	191
3A	OUTLET	MARTIN & LUNEL	2169-69-R11/12/13 P0-010	18	191
3B	OUTLET	MARTIN & LUNEL	2169-69-R11/12/13 P0-010	18	191
4A	OUTLET	BROWN & BOVERI	2169-69-R16-P0-011	18	192
4B	OUTLET	MARTIN & LUNEL	2169-69-R11/12/13 P0-010	18	191
5A	OUTLET	MARTIN & LUNEL	2169-69R11/12/13 P0-010	18	191
5B	OUTLET	MARTIN & LUNEL	2169-69-R11/12/13 P0-010	18	191
6A	OUTLET	MARTIN & LUNEL	2169-69-R11/12/13 P0-010	18	191
6B	OUTLET	MARTIN & LUNEL	2169-69-R11/12/13 P0-010	18	191
7A	OUTLET	MARTIN & LUNEL	2169-69-R11/12/13 P0-010	18	191

* ITEM COVERED IN OTHER GROUPS

X = NOT INCLUDED IN VENDOR DATA

ELF NORGE A/S
FRIGG FIELD
T.C.P - 2

VENDOR DATA VOLUME 3
TABLE OF CONTENTS BY ITEM NUMBER
GROUP 69-ELECTRICAL MISCELLANEOUS

McDERMOTT HUDSON ENGINEERING
PROJECT 2169
PAGE 81 OF

EQUIPMENT NUMBER	DESCRIPTION	VENDOR	PURCHASE ORDER NUMBER	BOOK NUMBER	SECTION NUMBER
HR1	CONTROL STATION	BROWN BOVERI	2169-69-R16-PO-011	18	192
HR2	CONTROL STATION	BROWN BOVERI	2169-69-R16-PO-011	18	192
HR3	CONTROL STATION	BROWN BOVERI	2169-69-R16-PO-011	18	192
HR4	CONTROL STATION	BROWN BOVERI	2169-69-R16-PO-011	18	192
HR5	CONTROL STATION	BROWN BOVERI	2169-69-R16-PO-011	18	192
HR6	CONTROL STATION	BROWN BOVERI	2169-69-R16-PO-011	18	192
HR7	CONTROL STATION	BROWN BOVERI	2169-69-R16-PO-011	18	192
HR8	CONTROL STATION	BROWN BOVERI	2169-69-R16-PO-011	18	192
HR9	CONTROL STATION	BROWN BOVERI	2169-69-R16-PO-011	18	192
JB6	JUNCTION BOX	EDMUNDSONS EXPORT	2169-69-RVAR-PO-003	18	188
JB7	JUNCTION BOX	EDMUNDSONS EXPORT	2169-69-RVAR-PO-003	18	188
JB11	JUNCTION BOX	EDMUNDSONS EXPORT	2169-69-RVAR-PO-003	18	188
JB12	JUNCTION BOX	EDMUNDSONS EXPORT	2169-69-RVAR-PO-003	18	188
JB14	JUNCTION BOX	EDMUNDSONS EXPORT	2169-69-RVAR-PO-003	18	188
JB15	JUNCTION BOX	EDMUNDSONS EXPORT	2169-69-RVAR-PO-003	18	188
JB16	JUNCTION BOX	EDMUNDSONS EXPORT	2169-69-RVAR-PO-003	18	188

* ITEM COVERED IN OTHER GROUPS

X = NOT INCLUDED IN VENDOR DATA

EQUIPMENT NUMBER	DESCRIPTION	VENDOR	PURCHASE ORDER NUMBER	BOOK NUMBER	SECTION NUMBER
FOR EQUIPMENT OR TAG NUMBER REFER TO THE RELEVANT P & I INSTALLED INSTRUMENTS ARE MARKED WITH THE RELEVANT TAG OR EQUIPMENT NUMBER	METER RUNS (SPEC 706-1)	DANIEL INDUSTRIES	2169-70-R01-PO-001	18	196
	LEVEL SWITCH/CONT. (SPEC 707-1)	G.E.C, ELLIOTT	2169-70-R02-PO-009	18	203
	CONTROL VALVES (SPEC 709-1)	G.E.C, ELLIOTT	2169-70-R03-PO-013	19	207
	REGULATOR (SPEC 709-2)	G.E.C, ELLIOTT	2169-70-R04-PO-010	18	204
	SAFETY RELIEF VALVES (SPEC 710-1)	SIR W.H. BAILEY	2169-70-R05-PO-004	18	198
	SPLIT PISTON R/VS (SPEC 710-2)	EDECO. PET. SERVICES	2169-70-R06-PO-005	18	199
	RUPTURE DISCS (SPEC 710-30	MARSTON EXCELSIOR	2169-70-R07-PO-006	18	200
	BREATHER VALVES (SPEC 710-4)	WHESSOE	2169-70-R08-PO-003	18	197
	VENT MANHOLES (SPEC 710-5)	WHESSOE	2169-70-R09-PO-003	18	197
	DEADWEIGHT R/Vs (SPEC 710-6)	WHESSOE	2169-70-R10-PO-003	18	197
	3 WAY CONTROL VALVES (SPEC 709-3)	G.E.C. ELLIOTT	2169-70-R11-PO-011	19	205
	TURBINE METERS (SPEC 706-2)	DANIEL INDUSTRIES	2169-70-R12-PO-028	20	222
	LEVEL GAUGES HP/LP (SPEC 708-1-2)	DANIEL INDUSTRIES	2169-70-R13-PO-023	19	217
	TEMPERATURE INDICATORS (SPEC 702-1)	DRESSER EUROPE	2169-70-R14-PO-021	19	215
	ESDV BLOWDOWNS (SPEC 709-4)	G.E.C. ELLIOTT	2169-70-R15-PO-012	19	206
	DELUGE VALVES (SPEC 709-5)	OIL CAPITAL VALVES	2169-70-R16-PO-007	18	201
	TEMP. TRANS/CONT (SPEC 702-2)	FOXBORO	2169-70-R17-PO-019	19	213

* ITEM COVERED IN OTHER GROUPS

X = NOT INCLUDED IN VENDOR DATA

ELF NORGE A/S
FRIGG FIELD
T.C.P - 2

VENDOR DATA VOLUME 3
TABLE OF CONTENTS BY ITEM NUMBER
GROUP 70 - INSTRUMENTS

McDERMOTT HUDSON ENGINEERING
PROJECT 2169

EQUIPMENT NUMBER	DESCRIPTION		VENDOR	PURCHASE ORDER NUMBER	BOOK NUMBER	SECTION NUMBER
FOR EQUIPMENT OR TAG NUMBER REFER TO THE RELEVANT P & I INSTALLED INSTRUMENTS ARE MARKED WITH THE RELEVANT TAG OR EQUIPMENT NUMBER	PRESSURE GAUGES	(SPEC 704-1)	AUXITROL LTD	2169-70-R18-PO-008	18	202
	ORIFICE PLATES	(SPEC 706-3)	HEECO LTD	2169-70-R19-PO-022	19	216
	PNEUMATIC SWITCHES	(SPEC 712-1)	LOBA	2169-70-R20-PO-014	19	208
	H2O ANALYSERS	(SPEC 714-1)	BECKMAN	2169-70-R21-PO-038	20	232
	P to I CONVERTER	(SPEC 715-1)	FOXBORO	2169-70-R22-PO-019	19	213
	PRESSURE TRANSMITTER	(SPEC 703-1	FOXBORO	2169-70-R23-PO-019	19	213
	D.P. TRANSMITTER	(SPEC 720-1	FOXBORO	2169-70-R24-PO-019	19	213
	VOLUME TANKS	(SPEC 701-1	G.E.C, ELLIOTT	2169-70-R25-PO-017	19	211
	2:1 GAIN RELAY	(SPEC 721-1	FOXBORO	2169-70-R26-PO-019	19	213
	GAS DETECTION	(SPEC 718-1)	J&S SIEGER	2169-70-R27-PO-024	19	218
	PNEUMATIC ALARM	(SPEC 722-1)	AMOT CONTROLS	2169-70-R28-PO-025	19	219
	VACUUM BREAKER	(SPEC 710-7)	GAS,OIL & CONSTRUCTION	2169-70-R29-PO-031	20	225
	FLOW GAUGES	(SPEC 706-4)	B. RHODES & SON	2169-70-R30-PO-018	19	212
	CHOKE VALVES	(SPEC 709-6)	SEVERN INSTRUMENTS	2169-70-R31-PO-015	19	209
	FIRE DETECTION	(SPEC 719-1)	AFA MINERVA	2169-70-R32-PO-027	20	221
	SUBMARINE CABLE	(SPEC 761-1	PIRELLI	2169-70-R33-PO-026	20	220
	SUBMARINE CABLE	(SPEC 761-2	PIRELLI	2169-70-R34-PO-026	20	220

* ITEM COVERED IN OTHER GROUPS

X = NOT INCLUDED IN VENDOR DATA

ELF NORGE A/S
FRIGG FIELD
TCP2

VENDOR DATA VOLUME 3
TABLE OF CONTENTS BY REQUISITION NUMBER
GROUP: 67 - ELECTRICAL NAVIGATIONAL SYSTEM

McDERMOTT HUDSON ENGINEERING
PROJECT 2169

PURCHASE ORDER				DESCRIPTION	VENDOR	BOOK NUMBER	BOOK SECTION NUMBER
PROJECT	GROUP	REQ	PO				
2169	67	R01	001	NAVIGATIONAL AID BATTERY CHARGER	WALLACE & TIERNAN	18	184

ELF NORGE A/S
FRIGG FIELD
TCP2

VENDOR DATA VOLUME 3
TABLE OF CONTENTS BY REQUISITION NUMBER
GROUP: 69 - ELECTRICAL MISCELLANEOUS

McDERMOTT HUDSON ENGINEERING
PROJECT 2169

PURCHASE ORDER				DESCRIPTION	VENDOR	BOOK NUMBER	BOOK SECTION NUMBER
PROJECT	GROUP	REQ	PO				
2169	69	R11	010	OUTLET	MARTIN & LUNEL	18	191
2169	69	R12	010	OUTLET	MARTIN & LUNEL	18	191
2169	69	R16	011	OUTLET	BROWN & BOVERI	18	192
2169	69	R13	010	OUTLET	MARTIN & LUNEL	18	191

ELF NORGE A/S
FRIGG FIELD
TCP2

VENDOR DATA VOLUME 3
TABLE OF CONTENTS BY REQUISITION NUMBER
GROUP: 70 - INSTRUMENTS

McDERMOTT HUDSON ENGINEERING
PROJECT 2169

PURCHASE ORDER				DESCRIPTION		VENDOR	BOOK NUMBER	BOOK SECTION NUMBER
PROJECT	GROUP	REQ	PO					
2169	70	R01	001	METER RUNS	(SPEC 706-1)	DANIEL INDUSTRIES	18	196
2169	70	R02	009	LEVEL SWITCH/CONT.	(SPEC 707-1)	G.E.C. ELLIOTT	18	203
2169	70	R03	013	CONTROL VALVES	(SPEC 709-1)	G.E.C. ELLIOTT	19	207
2169	70	R04	010	REGULATOR	(SPEC 709-2)	G.E.C. ELLIOTT	18	204
2169	70	R05	004	SAFETY RELIEF VALVES	(SPEC 710-1)	SIR W.H. BAILEY	18	198
2169	70	R06	005	SPLIT PISTON R/VS	(SPEC 710-2)	EDECO.PET. SERVICES	18	199
2169	70	R07	006	RUPTURE DISCS	(SPEC 710-3)	MARSTON EXCELSIOR	18	200
2169	70	R08	003	BREATHER VALVES	(SPEC 710-4)	WHESSOE	18	197
2169	70	R09	003	VENT MANHOLES	(SPEC 710-5)	WHESSOE	18	197
2169	70	R10	003	DEADWEIGHT R/VS	(SPEC 710-6)	WHESSOE	18	197
2169	70	R11	011	3 WAY CONTROL VALVES	(SPEC 709-3)	G.E.C. ELLIOTT	19	205
2169	70	R12	028	TURBINE METERS	(SPEC 706-2)	DANIEL INDUSTRIES	20	222
2169	70	R13	023	LEVEL GAUGES HP/LP	(SPEC 708-1-2)	DANIEL INDUSTRIES	19	217
2169	70	R14	021	TEMPERATURE INDICATORS	(SPEC 702-1)	DRESSER EUROPE	19	215
2169	70	R15	012	ESDV BLOWDOWNS	(SPEC 709-4)	G.E.C. ELLIOTT	19	206
2169	70	R16	007	DELUGE VALVES	(SPEC 709-5)	OIL CAPITAL VALVES	18	201
2169	70	R17	019	TEMP. TRANS/CONT.	(SPEC 702-2)	FOXBORO	19	213

PURCHASE ORDER				DESCRIPTION		VENDOR	BOOK NUMBER	BOOK SECTION NUMBER
PROJECT	GROUP	REQ	PO					
2169	70	R18	008	PRESSURE GAUGES	(SPEC 704-1)	AUXITROL LTD.	18	202
2169	70	R19	022	ORIFICE PLATES	(SPEC 706-3)	HEECO LTD	19	216
2169	70	R20	014	PNEUMATIC SWITCHES	(SPEC 712-1)	LOBA	19	208
2169	70	R21	038	H2O ANALYSERS	(SPEC 714-1)	BECKMAN	20	232
2169	70	R22	019	P to I CONVERTER	(SPEC 715-1)	FOXBORO	19	213
2169	70	R23	019	PRESSURE TRANSMITTER	(SPEC 703-1)	FOXBORO	19	213
2169	70	R24	019	D.P. TRANSMITTER	(SPEC 720-1)	FOXBORO	19	213
2169	70	R25	017	VOLUME TANKS	(SPEC 701-1)	G.E.C. ELLIOTT	19	211
2169	70	R26	019	2:1 GAIN RELAY	(SPEC 721-1)	FOXBORO	19	213
2169	70	R27	024	GAS DETECTION	(SPEC 718-1)	J & S SIEGER	19	218
2169	70	R28	025	PNEUMATIC ALARM	(SPEC 722-1)	AMOT CONTROLS	19	219
2169	70	R29	031	VACUUM BREAKER	(SPEC 710-7)	GAS,OIL & CONTRUCTION	20	225
2169	70	R30	018	FLOW GAUGES	(SPEC 706-4)	B. RHODES & SON	19	212
2169	70	R31	015	CHOKE VALVES	(SPEC 709-6)	SEVERN INSTRUMENTS	19	209
2169	70	R32	027	FIRE DETECTION	(SPEC 719-1)	AFA MINERVA	19	221
2169	70	R33	026	SUBMARINE CABLE	(SPEC 761-1)	PIRELLI	20	220
2169	70	R34	026	SUBMARINE CABLE	(SPEC 761-2)	PIRELLI	20	220

PURCHASE ORDER				DESCRIPTION	VENDOR	BOOK NUMBER	BOOK SECTION NUMBER
PROJECT	GROUP	REQ	PO				
2169	70	R35	020	BS & W MONITOR (SPEC 714-2)	CAMCO	19	214
2169	70	R35	029	BS & W MONITOR (SPEC 714-2)	CAMCO	20	223
2169	70	R36	016	JUNIOR ORIFICE ; (SPEC 706-5)	DANIEL INDUSTRIES	19	210
2169	70	R37	030	TELEPHONE CABLE (SPEC 761-3)	PIRELLI	20	224
2169	70	R38	019	TEMP. TRANS. INICATOR (SPEC 702-3)	FOXBORO	19	213
2169	70	R39	032	BALL VALVES (SPEC 709-7)	MAPEGAZ	20	226
2169	70	R40	036	I/F ROOM PANELS (SPEC 740-0)	CONTROLEC	20	230
2169	70	R41	040	DIESEL OIL STORAGE PANEL (SPEC 740-2)	CONTROLEC	20	234
2169	70	R42	019	PRESSURE CONTEOLLERS	FOXBORO	19	213
2169	70	R43	019	I TO P TRANSDUCERS (SPEC 715-2)	FOXBORO	19	213
2169	70	R44	033	3 WAY PILOT VALVES (SPEC 711-1)	G.E.C. ELLIOTT	20	227
2169	70	R45	033	3 WAY PILOT VALVES (SPEC 711-2)	G.E.C. ELLIOTT	20	227
2169	70	R46	035	3 WAY SOLENOID VALVES(SPEC 713-1)	COPPAS INTERNATIONAL	20	229
2169	70	R47	034	VOLUME BOOSTER RELAY (SPEC 711-3)	OXY METAL IND.	20	228
2169	70	R48	058	P.A. SYSTEM (SPEC 762-0)	BRODRENE STEEN HANSEN	20	249
2169	70	R49	019	PRESSURE CONTROLLER (SPEC 703-3)	FOXBORO	19	213
2169	70	R50	019	LOCAL RECEIVER (SPEC 716-1)	FOXBORO	19	213

ELF NORGE A/S
FRIGG FIELD
TCP2

VENDOR DATA VOLUME 3
TABLE OF CONTENTS BY REQUISITION NUMBER
GROUP: 70 - INSTRUMENTS

McDERMOTT HUDSON ENGINEERING
PROJECT 2169

PURCHASE ORDER				DESCRIPTION	VENDOR	BOOK NUMBER	BOOK SECTION NUMBER
PROJECT	GROUP	REQ	PO				
2169	70	R52	045	LEVEL SWITCHES (SPEC 707-2)	BESTOBELL MOBREY	20	239
2169	70	R53	037	TRACE MOISTURE PANEL (SPEC 714-1-1)	CONTROLEC	20	231
2169	70	R54	042	ROTAMETER (SPEC 723-1)	FISHER & PORTER	20	236
2169	70	R55	039	TRACE MOISTURE FILTER (SPEC 714-1-2)	HOKE INTERNATIONAL	20	233
2169	70	R56	054	DENSITY (SPEC 714-3)	J. AGAR	20	246
2169	70	R58	041	TRACE MOISTURE THERMO (SPEC 714-1-3)	ISOPAD LTD.	20	235
2169	70	R59	051	FLOW COMPUTRES (SPEC 706-6)	CAMCO LTD	20	244
2169	70	R60	043	HAND VALUE (SPEC 707-4)	HELIPEBS CONTROLS	20	237
2169	70	R61	046	ALARM ANNUNCIATOR (SPEC 708-3)	SCAMA LTD	20	240
2169	70	R62	049	PUMP START PANEL (SPEC 719-3)	AMOT CONTROLS	20	243
2169	70	R63	048	FLOW ELEMENT/SWITCH (SPEC 712-3)	AURIEMA LTD	20	242
2169	70	R64	044	D.P. TRANSMITTER (SPEC 706-7)	FOXBORO	20	238
2169	70	R65	044	PRESSURE TRANSMITTER (SPEC 703-4)	FOXBORO	20	238
2169	70	R66	044	TEMP TRANSMITTERS (SPEC 702-4)	FOXBORO	20	238
2169	70	R68	053	MANOMETERS (SPEC 720-2)	VISUAL ENGINEERING	20	245
2169	70	R70	050	HSD ENCLOSURE (SPEC 716-2)	UNIT CONTROLS	X	X
2169	70	R73	052	CONDENSATE STORAGE LOCAL PANEL (SPEC 740-3)	CONTROLEC	X	X

ELF NORGE A/S
FRIGG FIELD
TCP2

VENDOR DATA VOLUME 3
TABLE OF CONTENTS BY REQUISITION NUMBER
GROUP: 70 INSTRUMENTS

McDERMOTT HUDSON ENGINEERING
PROJECT 2169

PURCHASE ORDER				DESCRIPTION	VENDOR	BOOK NUMBER	BOOK SECTION NUMBER
PROJECT	GROUP	REQ	PO				
2169	70	R74	057	PNEUMATIC HORN (SPEC 716-4)	P.N.L. PROCESS	X	X
2169	70	R75	056	D.P. SWITCHES (SPEC 712-5)	R.P. CONTROLS	20	245
2169	70	R76	059	TELEMETRY INTERFACE TERMINAL CABINET (C7033)	COMSIP ENTERPRISE	20	250
2169	70	R77	059	INTERFACE ROOM EMERGENCY SHUTDOWN CABINET(C7034)	COMSIP ENTERPRISE	20	250
2169	70	R78	059	FLOW COMPUTOR (SPEC 706-8)	COMSIP ENTERPRISE	20	250
2169	70	R80	055	FUSIBLE PLUGS (SPEC 722-2)	OTIS PRESSURE CONTROLS	20	247
2169	70	R81	060	3 WAY TRIP VALVE (SPEC 711-4)	EDECO, PET SERVICES	X	X
2169	70	R83	063	RAPID EXHAUST VALVES (SPEC 711-5)	WESTINGHOUSE	X	X
2169	70	R84	062	H.V.A. CABINET (SPEC 705-5)	CONTROLEC	20	252
2169	70	R85	061	5.5 LOW NOISE CV (SPEC 709-8)	VALTEK ENG. LTD.	20	251
2169	70	R86	067	DIFF. ALARM AMP (SPEC 705-6)	FOXBORO	X	X
2169	70	R87	064	HAND SWITCHES (SPEC.721-5)	WALTER KIDDE	X	X
2169	70	R88	070	SYSTEM MONITOR PILOT(SPEC 709-9)	WILLIS OIL TOOL CO	20	255
2169	70	R90	066	PALLETT TRUCK (SPEC 701-5)	CROWN	X	X
2169	70	R91	071	3 P RECORDER (SPEC 714-6)	FOXBORO YOXALL	20	256
2169	70	R93	073	SALES GAS INSTRUMENT ENCLOSURE (SPEC 717-5)	P.S.I. LTD	X	X
2169	70	R94	069	RESIST. BULB & WELL (SPEC 702-5)	RESEMOUN ENG.	20	254

ELF NORGE A/S
FRIGG FIELD
TCP2

VENDOR DATA VOLUME 3
TABLE OF CONTENTS BY REQUISITION NUMBER
GROUP: 70 - INSTRUMENTS

McDERMOTT HUDSON ENGINEERING
PROJECT 2169

PURCHASE ORDER				DESCRIPTION	VENDOR	BOOK NUMBER	BOOK SECTION NUMBER
PROJECT	GROUP	REQ	PO				
2169	70	R95	074	METERING COUNTERS (SPEC 730-1)	HENGSTLER	X	X
2169	70	R97	072	SAMPLE PROBES (SPEC 718-5)	R.E. ENFIELD	20	257
					COMSIP ORDERS		
2169	70	R101	101	ALARM SEQUENCE	ITT/MTI	X	X
2169	70	R102	102	INSTRUMENTS	FOXBORO	X	X
2169	70	R104	104	EXCHANGES TELEPHONE SETS	S.T.K.	20	258
2169	70	R104	104	TELEMETRY EQUIPMENT	C.E.T.T.	20	258
2169	70	R106	106	COMPUTER	TELEMECHANIQUE	X	X
2169	70	R108	108	CABLE,	GORSE	X	X
2169	70	R109	109	PNEUMATIC ANNUNCIATOR	SAINT GYR	X	X
2169	70	R110	110	COMPUTER (SPARE)	C.I.T. ALCATER	X	X
2169	70	R111	111	PRINTER & SPARES	LANGABOX	X	X
2169	70	R112	112	LOCAL PANEL	COMEFI	X	X
2169	70	R114	114	TELEMETRY CONNECTION	COMSIP	X	X

ELF NORGE A/S
FRIGG FIELD
TCP2

VENDOR DATA VOLUME 3
TABLE OF CONTENTS BY REQUISITION NUMBER
GROUP: 79 INSTRUMENTATION

McDERMOTT HUDSON ENGINEERING
PROJECT 2169

PURCHASE ORDER				DESCRIPTION	VENDOR	BOOK NUMBER	BOOK SECTION NUMBER
PROJECT	GROUP	REQ	PO				
2169	79	R01	044	CABLE	STERLING CABLES	X	X
2169	79	R03	045	CABLE	ANIXTER (UK) LTD	X	X
2169	79	R05	017	CABLE GLANDS	HAWKE	X	X
2169	79	R05	036	CABLE TRAY	C.M.P.	X	X
2169	79	R06	032	CABLE TRANSITS	HAWKE	X	X
2169	79	R08	014	FITTINGS & JUNCTION BOXES	EDMUNDSONS	X	X
2169	79	R10	042	WEATHERPROOF JUNCTION BOXES	KLIPPON	X	X
2169	79	R10	042	SWITCHES	M.C.BIGNELL	X	X
2169	79	R11	014	FITTINGS & JUNCTION BOXES	EDMUNDSONS	X	X
2169	79	R12	034	CONDUIT FITTINGS	ELECTRICAL CONDUITS	X	X
2169	79	R15	014	FITTINGS & JUNCTION BOXES	EDMUNDSONS	X	X
2169	79	R18	014	FITTINGS & JUNCTION BOXES	EDMUNDSONS	X	X
2169	79	R20	014	FITTINGS & JUNCTION BOXES	EDMUNDSONS	X	X
2169	79	R31	002	MILD STEEL HARDWARE	ARNE AANESTAD	X	X
2169	79	R32	006	CARBON STEEL PIPE	TROUVAY & CAUVIN	20	261
2169	79	R33	022	NUTS BOLTS & WASHERS	ARNE AANESTAD	X	X
2169	79	R33	046	SREWS NUTS & WASHERS	RICHARD & ALLEN	X	X

ELF NORGE A/S
FRIGG FIELD
TCP2

VENDOR DATA VOLUME 3
TABLE OF CONTENTS BY REQUISITION NUMBER
GROUP: 79 INSTRUMENTATION

McDERMOTT HUDSON ENGINEERING
PROJECT 2169
PAGE 124 OF

PURCHASE ORDER				DESCRIPTION	VENDOR	BOOK NUMBER	BOOK SECTION NUMBER
PROJECT	GROUP	REQ	PO				
2169	79	R34	015	CHANNEL	G.T.S.	X	X
2169	79	R35	016	CABLE TRAYS	BARTON CONDUITS	X	X
2169	79	R36	014	FITTINGS & JUNCTION BOXES	EDMUNDSONS	X	X
2169	79	R37	030	TAPE WASHERS COMPOUND	EDMUNDSONS	X	X
2169	79	R38	022	NUTS BOLTS & WASHERS	ARNE AANESTAD	X	X
2169	79	R39	027	STUDS & SPACERS	G.G. ENGINEERING	X	X
2169	79	R40	024	WELDING EQUIPMENT	CADWELD	X	X
2169	79	R41	023	CABLE TRAY	WARWICK RIM	X	X
2169	79	R51	006	CARBON STEEL PIPE	TROUVAY & CAUVIN	X	X
2169	79	R52	004	PIPE & FITTINGS	GAS OIL & CONSTRUCTION	X	X
2169	79	R53	004	PIPE & FITTINGS	GAS OIL & CONSTRUCTION	X	X
2169	79	R54	039	SPECIAL ADAPTORS	R.E.ENFIELD	X	X
2169	79	R55	029	PIPE & FITTINGS	G.G.ENGINEERING	X	X
2169	79	R56	003	PIPE FITTINGS	GAS OIL & CONSTRUCTION	X	X
2169	79	R56	033	PIPE FITTINGS	RORHANDEL	20	272
2169	79	R57	003	PIPE FITTINGS	GAS OIL & CONSTRUCTION	20	259
2169	79	R57	033	PIPE FITTINGS	RORHANDEL	20	272

ELF NORGE A/S
FRIGG FIELD
TCP2

VENDOR DATA VOLUME 3
TABLE OF CONTENTS BY REQUISITION NUMBER
GROUP: 79 INSTRUMENTATION

McDERMOTT HUDSON ENGINEERING
PROJECT 2169

PURCHASE ORDER				DESCRIPTION	VENDOR	BOOK NUMBER	BOOK SECTION NUMBER
PROJECT	GROUP	REQ	PO				
2169	79	R58	003	PIPE FITTINGS	GAS OIL & CONSTRUCTION	20	259
2169	79	R60	029	PIPE & FITTINGS	G.G.ENGINEERING	X	X
2169	79	R61	005	VALVES	PEROLO	20	260
2169	79	R61	026	CHECK VALVE	SCANARMATUR	20	270
2169	79	R62	009	GLOBE VALVES	ASHFORD CONTROLS	20	263
2169	79	R63	007	VALVES	MAPEGAZ	20	262
2169	79	R64	011	THREE VALVE MANIFOLDS	ASHFORD CONTROLS	20	265
2169	79	R66	010	STAINLESS STEEL TUBE	MANEX	20	264
2169	79	R66	028	STAINLESS STEEL COIL	GAS OIL & CONSTRUCTION	20	271
2169	79	R67	012	MONEL TUBE	FINE TUBES LTD	20	266
2169	79	R68	020	STAINLESS STEEL MULTITUBE	FINE TUBES LTD	20	268
2169	79	R68	021	FABRICATION OF MULTITUBE	S.M.P.	X	X
2169	79	R70	031	NYLON TUBE	P.S.I. LTD	X	X
2169	79	R71	008	COMPRESSION FITTINGS	HOKE INTERNATIONAL	X	X
2169	79	R74	019	INSTRUMENT ENCLOSURES	P.S.I. LTD	20	267
2169	79	R77	018	FILTER	C.A.NORGREN	X	X
2169	79	R78	018	FILTER	C.A.NORGREN	X	X

ELF NORGE A/S
FRIGG FIELD
TCP2

VENDOR DATA VOLUME 3
TABLE OF CONTENTS BY REQUISITION NUMBER
GROUP: 79 INSTRUMENTATION

McDERMOTT HUDSON ENGINEERING
PROJECT 2169

PURCHASE ORDER				DESCRIPTION	VENDOR	BOOK NUMBER	BOOK SECTION NUMBER
PROJECT	GROUP	REQ	PO				
2169	79	R79	025	REGULATING VALVE	TECHMATION LTD	20	269
2169	79	R81	013	TEFLON TAPE	TECHMATION LTD	X	X
2169	79	R91	040	CABLE GLANDS	HAWKE	X	X
2169	79	R92	041	JUNCTION BOXES	KLIPPON	X	X
2169	79	R93	037	CABLE TRAY	BARTON CONDUITS	X	X

TCP2 JOB BOOK

VOLUME 4

CONTRACT AND FINANCIAL STATEMENT

TABLE OF CONTENTS OF VOLUME 4

		Book No.
SECTION 1	Main Contract	
	Between Elf Norge and Prime Contractor McDermott Hudson.	1
SECTION 2	Contract Awarded By Elf Norge and Managed by McDermott Hudson (CMP,UIE,SEV) and other Contracts (like Wagley,Fieldco,Comsip-hook-up Contracts	1
2.1	List of contracts, table of contents place of each part of the contract in the Job Book.	
2.2	Contracts (contractual part only)	1
SECTION 3	Purchase Orders	
3.1	Purchase Orders register	1
3.2	Purchase orders	1,2,3,4,5,
SECTION 4	The Final Statement of Costs	6

TCP2 JOB BOOK

VOLUME 5

Table of Contents of Volume 5

Section 1. Start Up Instructions

1.1 General

1.1.1 Start Up limits (from the last commissioning operation to the operational state of a system).

1.2 Start Up Instructions - Electrical Network

1.2.1 Turbines/Alternators (including control panels)
1.2.2 5.5 kv Switchgear (including synchronising trolley)
1.2.3 Transformers
1.2.4 380 Volt MCC
1.2.5 Emergency Power
1.2.6 Lighting
1.2.7 Navigation Aids
1.2.8 P A & Alarm

1.3 Start Up Instructions - Utility Network

1.3.1 Firewater
1.3.2 Instrument & Plant Air
1.3.3 Diesel Oil
1.3.4 Methanol
1.3.5 Utility Water
1.3.6 Washdown Water
1.3.7 Mud
1.3.8 Drainage
1.3.9 Hydraulics
1.3.10 Sewage

1.4 Start Up Instructions - Safety Network

1.4.1 Fire Detection
1.4.2 Gas Detection
1.4.3 Shutdown System
1.4.4 Water Deluge System
1.4.5 Halon

1.5 Start Up Procedures - H and V Network

1.5.1 Fire Pump House A
1.5.2 Fire Pump House B
1.5.3 Workshop and stores
1.5.4 Transformer Room
1.5.5 Battern Room
1.5.6 Air Lock
1.5.7 Battery Room (Emergency System)
1.5.8 Emergency Equipment Room (Emergency System)
1.5.9 Generator and Air Conditioning Plant Room
1.5.10 Air Conditioning Areas
1.5.11 Air Conditioning Refrigeration System

1.6 Start Up Instructions - Process Network

1.6.1 Glycol
1.6.2 Wet Gas
1.6.3 Dry Gas
1.6.4 Condensate
1.6.5 Fuel Gas
1.6.6 HP Relief
1.6.7 LP Vent

Note

Each of the above systems for each Network has been described to the following pattern:-

1. General description of the System (Data from P & ID + general electrical parameters motor power).

2. System Check

3. External Utilities

4. Start Up Operations in sequence

5. Tests and checks to be carried out during Start Up. (Different from tests from commissioning).

6. Simplified P & ID (A3 size) showing the main equipment and main lines (or Single Wire Diagram for electrics).

SECTION 2. Operating Instructions

2.1 General

2.1 1 Ref Drawings - P & IDs

2.1.2 General Design parameters (nominal prod. rate gas analysis well properties treated gas properties normal operating pressures local conditions).

2.2 Operating Instructions - Electrical Network

2.2.1 Turbines/Alternators (including control panels)

2.2.2 5.5 kv Switchgear (including synchronising trolley)

2.2.3 Transformers

2.2.4 380 volt MCC

2.2.5 Emergency Power

2.2.6 Lighting

2.2.7 Navigation Aids

2.2.8 P A & Alarm

2.3 Operating Instructions - Utility Network

2.3.1 Firewater

2.3.2 Instrument & Plant Air

2.3.3 Diesel Oil

2.3.4 Methanol

2.3.5 Utility Water
2.3.6 Washdown Water
2.3.7 Mud
2.3.8 Drainage
2.3.9 Hydraulics
2.3.10 Sewage

2.4 Operating Instructions - Safety Network

2.4.1 Fire Detection
2.4.2 Gas Detection
2.4.3 Shutdown System
2.4.4 Water Deluge System
2.4.5 Halon

2.5 Operating Instructions - H and V Network

2.5.1 Fire Pump House A
2.5.2 Fire Pump House B
2.5.3 Workshop and Stores
2.5.4 Transformer Room
2.5.5 Battery Room
2.5.6 Air Lock
2.5.7 Battery Room (Emergency System)
2.5.8 Emergency Equipment Room (Emergency System)
2.5.9 Generator and Air Conditioning Plant Room
2.5.10 Air Conditioning Areas
2.5.11 Air Conditioning Refrigeration System

2.6 Operating Instruction - Process Network

2.6.1 Glycol
2.6.2 Wet Gas
2.6.3 Dry Gas
2.6.4 Condensate
2.6.5 Fuel Gas
2.6.6 HP Relief
2.6.7 LP Vent

Note Description of each system gives information on operating parameters and the operation under the following conditions:-

1. Design conditions
2. Emergency Shut down
3. Total and partial stop of the Production for maintenance purposes - (Elf Norge).
4. Re-starting of production - (Elf Norge).
5. Common causes of system malfunction.

7

Distribution List for

the Job Book

DISTRIBUTION OF JOB BOOKS

Destination	Vol. 1	Other Volumes (2,3,4,5)	
TCP2, TF1 and OP.			
M Curutchet, Elf-Norge Group Frigg Tour Franklin, Cedex No. 11, 92081 Paris La Defense FRANCE	X		
M Laffont/Gregoire Elf-Norge Group Frigg, Tour Franklin, Cedex No. 11, 92081 Paris La Defense FRANCE	X	X	
M Laffont, Technip, c/o Elf-Norge Group Frigg, Tour Franklin, Cedex No. 11, 92081 Paris La Defense FRANCE	X	X	
M Tartera, Elf Aquitaine Norge be sent P O Box 168 eparately) 4001 Stavanger, NORWAY	X	X	
M Pol/De Saint Palais Elf Aquitaine Norge Production P O Box 168 Department 4001 Stavanger, NORWAY	X	X	
M Rouilloux, Elf Aquitaine Norge P O Box 168 4001 Stavanger, NORWAY	X	X	
. Olderkjaer Elf Aquitaine Norge Central P O Box 168 Filing, 4001 Stavanger, NORWAY	X	X	

Destination	Vol. 1	Other Volumes (2,3,4,5)	
M Guerin Villaubreuil Elf, UK Limited Knightsbridge House 197 Knightsbridge London S.W.7 1RZ	X		
Mr Dorgebray, Elf Aquitaine Norge A/S Hillevaagsveien 12 4000 Stavanger Norway	X	X	
Offshore Production Filing on QP Production Elf Aquitaine Norge P O Box 168 4001 Stavanger, NORWAY C/O Mr. Letourmy	X	X	
M Heihust Spare Copy Purchase Elf Aquitaine Norge Department P O Box 168 4001 Stavanger, NORWAY	X 5 copies	X	
TCP2 ONLY			
M R Guillo Elf Aquitaine Norge A/S Start Up P O Box 168 Department 4001 Stavanger, NORWAY Onshore Offshore	X X	X X	
Y Wautelet Elf Aquitaine Norge A/S Hook-Up Consul Sigvald Bergesen Vei Supervision Hillevaag/4000 Stavanger Onshore Norway Offshore	X X	X X	
M Strat Sofresid Maintenance 59 rue de la Republique Manual 93108 Montreuil sous Bois Updating Paris FRANCE	X	X	