DECEMBER 1977

FRIGG FIELD

TREATMENT PLATFORM No. 1

CONTRACT S. 88

PROJECT 2110

VOLUME 1

BOOK 1

PROJECT DESCRIPTION

elf

elf aquitaine norge a/s

McDERMOTT HUDSON ENGINEERING

LONDON — ENGLAND

TP1 - F - 201 - 8

SCF 043

TP1 JOB BOOK

VOLUME 1

PROJECT DESCRIPTION

PHOTOGRAPH OF

TREATMENT PLATFORM NO. 1



TP1 TCP2 AND QPPRIOR
TO INSTALLATION OF
TP1 TCP2 BRIDGE
SUMMER 1977



TP1 DURING A SEVERE
STORM WINTER 1976/7

TABLE OF CONTENTS

TP1 JOB BOOK

VOLUME 1

PRJOECT DESCRIPTION

TABLE OF CONTENTS OF VOLUME 1

TP1 JOB BOOK

VOLUME 1

PROJECT DESCRIPTION

TABLE OF CONTENTS OF VOLUME 1

SECTION 1 GENERAL

1.1 Description of the Consortium

1.2 Description of the Frigg Field

1.2.1 General information on the Frigg Field and connected projects.

1.2.2 Sketch of Frigg Field and the connected projects.

1.3 Distribution of work between the prime contractors.

SECTION 2 DESCRIPTION OF TP1

2.1 General Drawings and Plot Plans

2.2 General Description of the Platform

SECTION 3 GENERAL DATA

3.1 Climatic and Sea Data

SECTION 4 PRINCIPLES OF DESIGN

4.1 Principles of Electrical, Instrument, Process and Mechanical design.

4.2 Interconnections between platforms

4.2.1 Process Interconnections

4.2.2 Electrical Interconnections

4.2.3 Instrument Interconnections

4.2.4 Communication

4.3 Main P & ID's

4.4 Single Wire Diagrams

SECTION 5 NUMBERING SYSTEM FOR DOCUMENTS

5.1 Drawing Numbering System

5.2 Specification, Requisition and Purchase Order Numbering System.

5.3 Equipment Tag Numbering System

SECTION 6 TABLE OF CONTENTS OF THE JOB BOOK

6.1 How to Use the Tables

6.2 Table of Contents for Volumes 1, 2, 3 and 4

SECTION 7 DISTRIBUTION LIST FOR THE JOB BOOKS

G E N E R A L

Volume I of this Job Book has been written to show the extent of the Frigg Field project in general. It also gives general drawings, description of the Platform and the principles of design.

Description of the Consortium

1.1 Description of the Consortium

The median line between the United Kingdom and Norwegian sectors of the North Sea Continental Shelf passes through the Frigg Field. However, it has been agreed by the various parties involved that the Frigg Field is developed as a single entity. The percentage equity in the consortium has been based on an independant study of the distribution of the field between the two areas (approximately 60% Norway and 40% United Kingdom).

The consortium consists of the following companies, each company being liable only to the extent of its equity in the said consortium.

Elf Oil Exploration and Production (UK) Ltd	17.40%
Aquitaine Oil (UK) Ltd	8.70%
Total Oil Marine	13.06%
Norsk Hydro Produksjon A/S	19.99%
Den Norske Stats Oljeselakap A/S	3.04%
Elf Aquitaine Norge A/S	25.19%
Total Marine Norsk A/S	12.59%

The above percentages are approximate and subject to the parters approval.

Description of the Frigg Field

1.2 Description of Frigg Field

Located in the northern area of the North Sea, at the 60th parallel and midway between the South Shetlands and Bergen, the Frigg Gas Deposit straddles the boundary-line between the British and Norwegian Continental Shelf areas. The depth of water at this point is approximately 100 meters.

The field was discovered in July 1971 by Elf Norge, operating the Franco-Norwegian partnership known as Petronord, owner of the rights on the Norwegian side (block 25-1), this discovery was confirmed in May 1972 by Total Oil Marine, operator of the group which holds the rights on the British side (block 10-1).

Following the large outputs (700,000 m^3/day) of dry, sulphur free gas (in the region of 95% methane and 4% ethane)which were obtained during preliminary tests, new drillings were carried out and these confirmed the extent of the deposit. This was declared "commercial" in April 1972.

The partners of the Consortium have agreed upon a division of responsibility for operational tasks and a sharing of production. Elf Norge is the operator for all the offshore installation on the field and is responsible for the production and treatment of the gas. Total Oil Marine is responsible for transportation of the gas from Frigg to Scotland together with the operation of the Manifold Compression Platform and the onshore terminal at St. Fergus.

The gas is extracted from the pay zone by the two drilling platforms (CDP1 and DP2), each having 24 wells in 2 clusters of 12 each. There it undergoes de-sanding and initial liquid separation prior to being passed to the treatment complex. CDP1 is connected to TP1 and DP2 to TCP2 each by two 26" subsea-lines.

On the treatment platforms the gas is processed in any 2 of 3 parallel streams, the third stream acting as a 'stand-by'. In each stream, gas firstly passes through a Free Water Knock Out Separator, which separates gas and free condensed liquid or slugs (from the subsea-lines); then it is scrubbed with triethylene glycol in a Contactor to give a dew point of at least - 5°C, from which it passes through a pressure reset flow control scheme; the three dry gas streams then combine into a Scottish sales gas header prior to leaving the treatment complex via a 32" subsea-line to Scotland. Each Contactor is provided with high purity glycol from a 'Glycol Regeneration Unit'. This unit removes water, hydrocarbon liquid and gas from impure glycol received from the contactor.

Condensate produced by liquid separation on the treatment platform together with that received from the drilling platform via a 4" subsea-line is treated to decrease the water content to below 50 ppm before being injected into the 2-phase flow 32" sales gas line.

The planned production rate for normal operation of the complete complex is 15 billion cubic meters annually.

General information on the Frigg Field and connected projects

1.2.1 GENERAL INFORMATION

1.2.1.1 Location

Frigg Field is located between 59° 48' and 59° 60' longitude North
and between 1° 97' and 2° 15' longitude East

Distance from Norwegian Coast	190 Km
Distance from Shetland Islands	180 Km
Distance from Scottish Coast	360 Km

1.2.1.2 Deposit Characteristics

Depth of reserves below sea level	1,900m
Water depth at deposit	100m
Gas Pressure	approximately 200 bars
Gas Temperature	approximately $60^{\circ}C$
Recoverable Reserves	over 200 billion m^3
Production Rate (annual)	15 billion m^3
Planned production life of field	approximately 20 years

1.2.1.3 Platforms located in Frigg Field.

There are a total of five platforms and one flare structure located on Frigg Field to produce and process the gas resource and house the personnel required to operate and maintain the platforms.
The platforms comprise of the following:-

In the British Zone -
Quarters Platform - 60 bedrooms for 120 personnel
Concrete Drilling Platform No 1 -
24 producing wells
Treatment Platform No 1 -
Treatment of 30 million m^3 of gas a day from CDP1 through two out of three process streams under normal operation, with a maximum of 45 mill. m^3 of gas a day through all three streams, prior to export to St. Fergus terminal by 32" pipeline.

Flare Structure - designed for relief of 1.5 million m^3 per hour of gas during any emergency on TP1 or TCP2 during production phase.

In Norwegian Zone

Drilling Platform No 2 -

24 producing wells.

Treatment Compression Platform No 2 -

Treatment of 30 million m^3 of gas a day from DP2 through two out of the three process streams under normal operation, with a maximum of 45 million m^3 of gas a day through all three streams, prior to export to St. Fergus terminal by 32" pipeline.

1.2.1.4 Manifold Compression Platform

Located 180 Km from Frigg, the intermediate platform (M.C.P.) has been installed to control and adjust the flow of gas and condensate within the two pipelines from TP1 and TCP2. This platform will also recompress the gas when the well head pressure drops.

1.2.1.5 St. Fergus terminal - Scotland.

The terminal point of the two Frigg Gas pipelines and the offtake point for the two pipelines for the delivery of gas to the British Gas Corporation is at St. Fergus - Scotland. This facility has been designed to process 60 million m^3 of gas per day under normal operation with a maximum of 90 million m^3 per day.

Sketch of Frigg Field and the

connected projects.

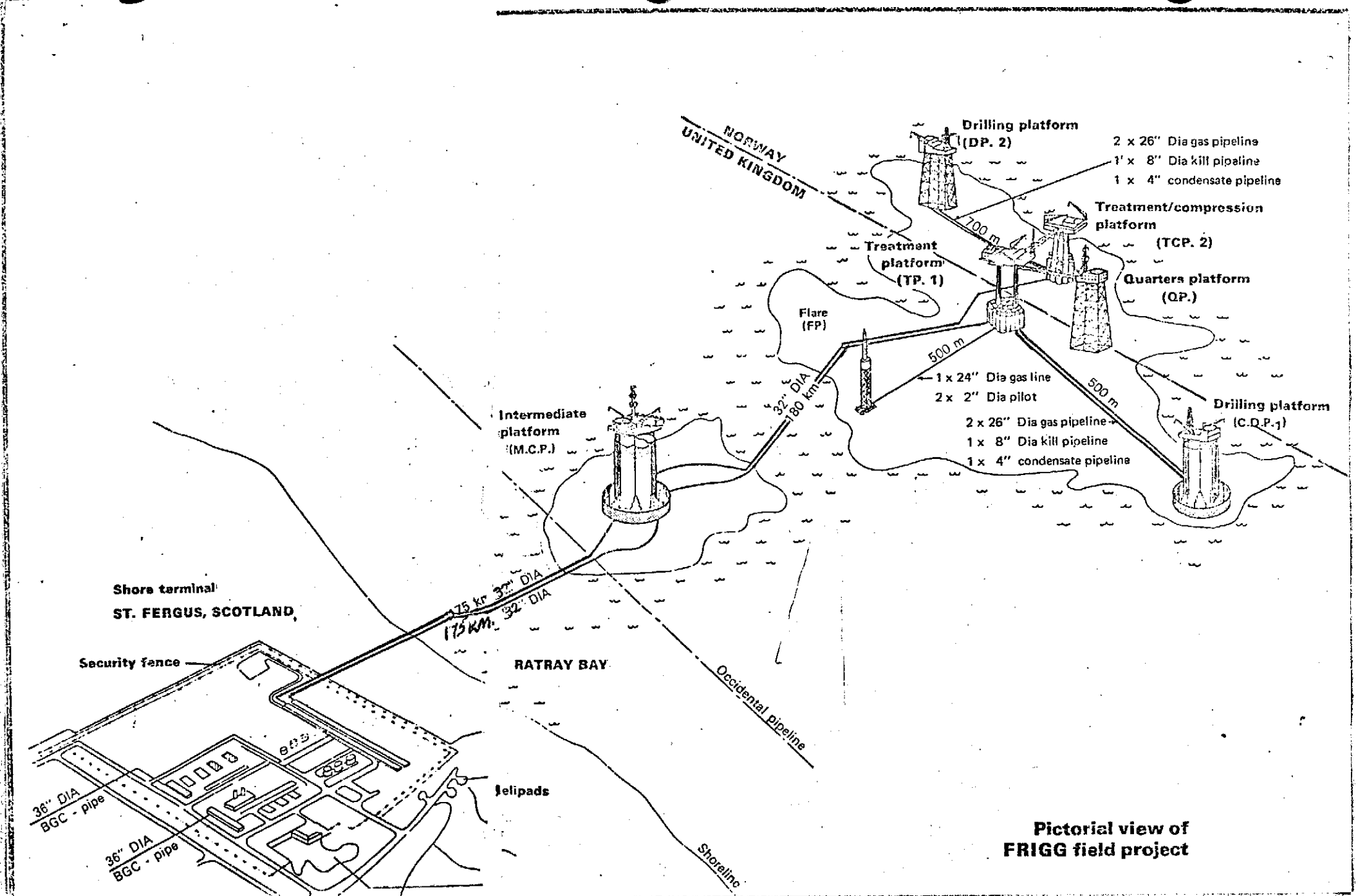

Pictorial view of FRIGG field project

Distribution of work between
the prime contractors

TP1 JOB BOOK

VOLUME 1

PROJECT DESCRIPTION

Section 1.3

Platform Name	Design Contractor	Fabrication Contractor
QP - Modules	McDH	CDLG
Support Frame	McDH	UIE
Jacket	McDH	UIE
TP1 - Modules	McDH	MME
Support Frame	McDH	CMP
Concrete Gravity Base Structure	Sea Tank Co	Sea Tank Co/ McAlpine
CDP1 - Modules	Lummus/B & R	UIE
Concrete Gravity Base Structure	DORIS	DORIS
TCP2 - Module	McDH *	SPIE/VIGOR
Support Frame	KVEARNER	CMP/UIE/AKER
Concrete Gravity Base Structure	Norwegian Contractors	Norwegian Contractors
DP2 - Modules	Lummus	UIE
Support Frame	McDH	UIE
Jacket	McDH	UIE
Flare Stack	EMH/ACB	CFEM

* McDH also Managing Contractor

DESCRIPTION OF TP1

General Drawings and Plot Plans

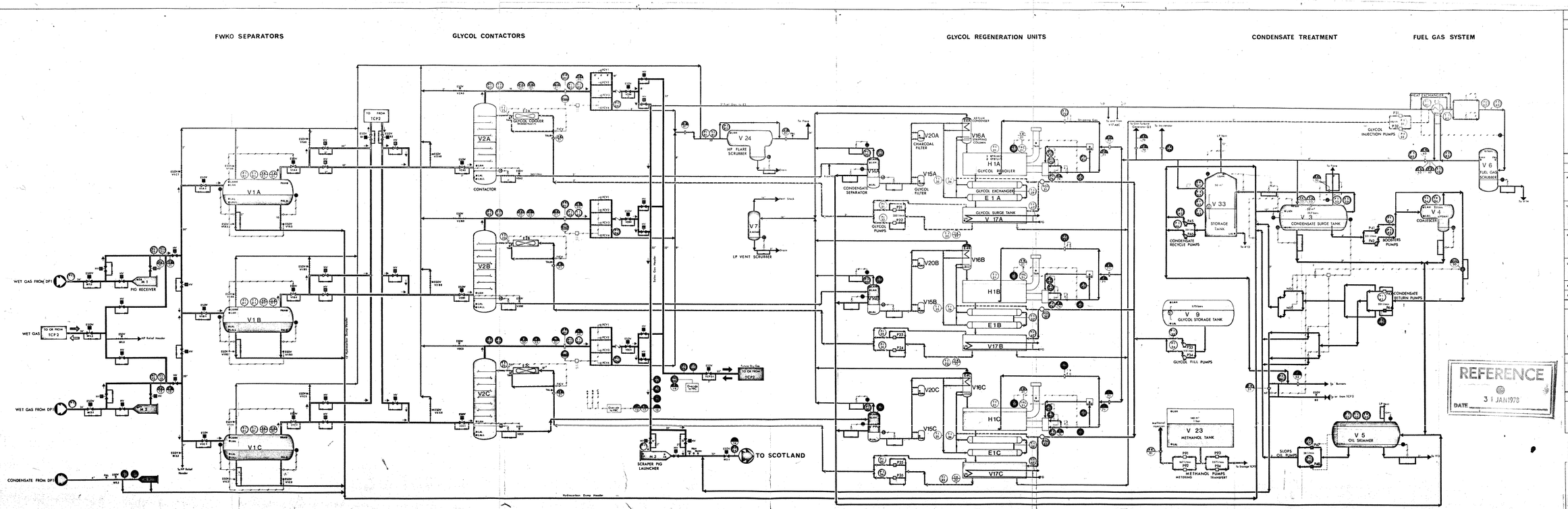
FWKO SEPARATORS
GLYCOL CONTACTORS
GLYCOL REGENERATION UNITS
CONDENSATE TREATMENT
FUEL GAS SYSTEM
WET GAS FROM DP1
PIG RECEIVER
WET GAS
TO OR FROM TCP2
WET GAS FROM DP2
CONDENSATE FROM DP1
V1A
V1B
V1C
V2A
V2B
V2C
CONTACTOR
GLYCOL COOLER
V 24
HP FLARE SCRUBBER
V7
LP VENT SCRUBBER
SCRAPER PIG LAUNCHER
TO SCOTLAND
CONDENSATE SEPARATOR
V15A
V15B
V15C
V20A
V20B
V20C
CHARCOAL FILTER
GLYCOL FILTER
GLYCOL PUMPS
V16A
V16B
V16C
H1A
H1B
H1C
GLYCOL REBOILER
GLYCOL EXCHANGER
E1A
E1B
E1C
GLYCOL SURGE TANK
V 17A
V17B
V17C
V 33
STORAGE TANK
CONDENSATE RECYCLE PUMPS
V 3
CONDENSATE SURGE TANK
V 4
COALESCER
BOOSTERS PUMPS
CONDENSATE RETURN PUMPS
V 9
GLYCOL STORAGE TANK
GLYCOL FILL PUMPS
V 23
METHANOL TANK
METHANOL PUMPS METERING
METHANOL PUMPS TRANSFERT
V 5
OIL SKIMMER
SLOP'S OIL PUMPS
HEAT EXCHANGER
GLYCOL INJECTION PUMPS
V 6
FUEL GAS SCRUBBER
To Scotland
To Ekofisk
To Emden
To Bacton
To Dunkerque
To Zeebrugge
To Dump Header
To Slop Header
To Flare Header
To Fuel Gas Header
To Condensate Storage Header
To Hydrocarbon Dump Header
To Methanol Storage Header
To Glycol Storage Header
To Glycol Regeneration Header
To Condensate Storage Header
To Condensate Recycle Header
To Condensate Return Header
To Oil Skimmer Header
To Slop Header
To Methanol Injection Header
To Glycol Injection Header
To Fuel Gas Header
To Fuel Gas Heat Exchanger
To Glycol Reboiler
To Glycol Heat Exchanger
To Glycol Air Cooler
To Glycol Reflux Condenser
To Glycol Stripping Column
To Glycol Surge Tank
To Glycol Storage Tank
To Glycol Fill Pumps
To Glycol Injection Pumps
To Glycol Heat Exchanger
To Glycol Air Cooler
To Glycol Reflux Condenser
To Glycol Reboiler

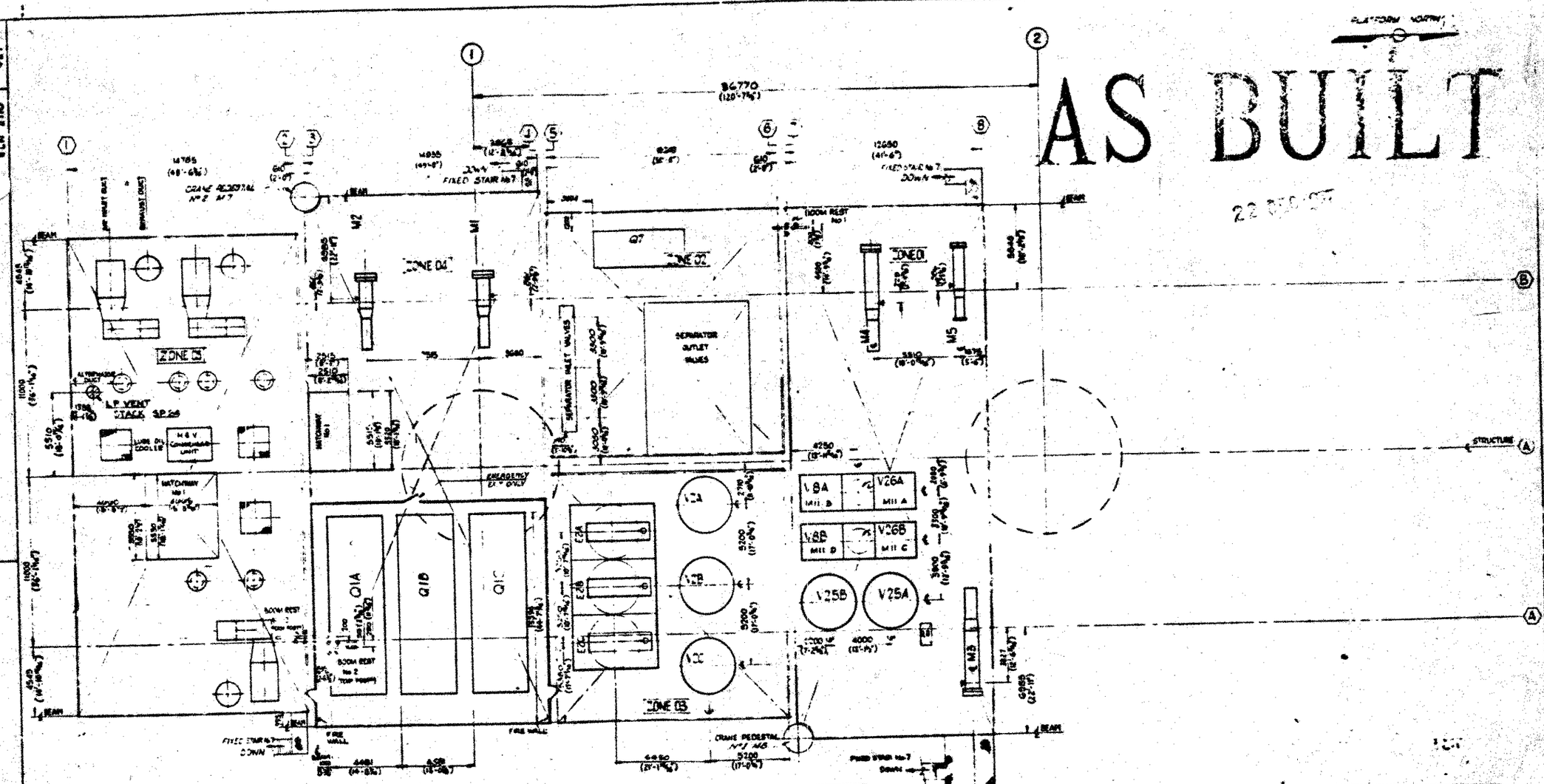

ZONE	EQUIPMENT No	DESCRIPTION	ELEVATION
01	M3	PIG LAUNCHER	℄ 38700
01	M4	PIG RECEIVER	℄ 38700
01	M5	PIG RECEIVER	℄ 38500
01	Q8	REMOTE CONTROL STATION FOR PIGS	TO ℄ 37168
01	V8A/B	MUD MIX TANK	TO ℄ 37168
01	V25A/B	MUD & MUD/CEMENT BULK HOPPER	TO ℄ 37168
01	V26A/B	MUD SURGE TANK	[illegible]
01	M8	CRANE PEDESTAL No. 1	[illegible]
01	M11 A&C D	MUD MIXERS	
02	Q7	CENTRAL HYDRAULIC UNIT	[illegible]
03	E2A/B/C	GLYCOL AIR COOLERS	TO ℄ 37168
03	V2A/B/C	GLYCOL CONTACTORS	[illegible]

ZONE	EQUIPMENT No	DESCRIPTION	ELEVATION
04	M7	CRANE PEDESTAL NO. 2	[illegible]
04	M1	PIG RECEIVER	℄ 38469
04	M2	PIG RECEIVER	℄ 38469
04	Q1A/B/C	GLYCOL REBOILERS	TO ℄ 37168
05	SF 24	LP VENT STACK	[illegible]

TOP OF PLATFORM ELEVATION – 37168

INDICATES ERECTOR INSTALLED EQUIPMENT

AS BUILT
TO INFORMATION RECEIVED UP TO [illegible]

ELF - NORGE
FRIGG FIELD

TREATMENT PLATFORM No 1
JOB 1-40-C2

McDERMOTT – HUDSON
LONDON – ENGLAND

DRAWN BY	SCALE	DATE	DWG NO
C GRICE	1:125	23 5 74	E.N 2110
CHECKED BY J.T. YOUNGS			421

PLOT PLAN - UPPER LEVEL

CUSTOMER APPROVAL

NO	BY	DATE	REVISIONS
1	[illegible]	[illegible]	REVISED AS INDICATED
2	[illegible]	[illegible]	REVISED AS INDICATED
1	[illegible]	[illegible]	APPROVED FOR CONSTRUCTION
8	[illegible]	[illegible]	AS BUILT

AS BUILT

ZONE 04 | ZONE 05 | ZONE 02 | ZONE 01 | ZONE 03

V1A | V1B | V1C | V2A | V2B | V2C | V3 | V33

TA-1 | TA-2 | TA-3

Q1A (V-17A) | Q1B (V-17B) | Q1C (V-17C)

MAJOR ACCESS WAY TO P.B.E.

PRODUCTION OPERATOR

HATCHWAY | COFFEE ROOM

PLATFORM EL+29280

MODULE 2A

CONTACTOR VALVE MANIFOLDS

METHANOL STORAGE TANK

CRANE PEDESTAL No 1 M8

CRANE PEDESTAL No 2 M7

FIXED STAIR No 7 | FIXED STAIR No 2 | FIXED STAIR No 8 | FIXED STAIR No 4 | FIXED STAIR No 5A

COVERED LIFEBOAT | WALKWAY | BRIDGE TO TCP 2

HALON BOTTLES Q4

RETAINING FLOOR EL 32308

STRUCTURE A

AS BUILT
TO INFORMATION RECEIVED UP TO VT 197

LEGEND
- SMOKE DETECTOR
- EMERGENCY LIGHTING
- 2 PORTABLE WATER EXTINGUISHERS (10 LITRES)

ZONE	EQUIPMENT No	DESCRIPTION	ELEVATION
01	P15A&B	CONDENSATE RECYCLE PUMP	TOP EL 29548
01	E3	FUEL GAS EXCHANGER	EL 30615
01	M9	CONDENSATE PIG RECEIVER	EL 30548
01	V3	CONDENSATE SURGE TANK	EL 32298
01	V6	FUEL GAS SEPARATOR	TAN EL 30310
01	V33	CONDENSATE STORAGE TANK	TOP EL 29548
01	M1A/B	CRANE PEDESTAL No 1	TOP PED EL 45.97
02	V1A/B/C	FWKO SEPARATORS	EL 32348
05	P-10 A&B	MAIN DIESEL OIL FUEL PUMP	

ZONE	EQUIPMENT No	DESCRIPTION	ELEVATION
05	P15A&B	MAIN DIESEL OIL FUEL PUMP	
05	V2A/B/C	CONTACTORS	TAN 33748
04	G1A/B/C	GLYCOL REGENERATION UNIT	TOP EL 29548
04	M-7	CRANE PEDESTAL No 2	TOP PED EL 45.97
04	V-31	GLYCOL CHARCOL FILTER	
04	P14A&B	GLYCOL INJECTION PUMPS	TOP EL 29548
	M14	COVERED LIFEBOAT	
		COVERED LIFEBOAT	
05	M15A/B	2 TON HOIST	
05	M22A/B	10 TON HOIST	
05	TA1/2/3	GENERATOR PACKAGE UNIT	TOP EL 29548
05	Q4	FIRE DETECTION WITH QUENCH SYSTEM	

TOP OF PLATFORM ELEVATION - 29548

INDICATES ERECTOR INSTALLED EQUIPMENT

REVISIONS	DATE	APP
3 KC 1-8-75 REVISED AS INDICATED	15.8.75	RS
2 DAM 7.8.75 REVISED AS INDICATED	8.8.75	RS
1 DAM 3-10-74 APPROVED FOR CONSTRUCTION	30.10.74	RS
As Built	11.11.74	RS
ADDED P-15A&B MAIN DIESEL OIL FUEL PUMP	8.11.74	RS
REVISED AS NOTED THIS SHT	10.9.74	RS

CUSTOMER APPROVAL

ENGINEERS APPROVAL Tim Dawson Aug 13, 1974

ELF - NORGE
FRIGG FIELD
TREATMENT PLATFORM No 1
JOB 1-40-C2
McDERMOTT — HUDSON
LONDON — ENGLAND

DRAWN BY	SCALE	DATE	DRG No
J.C GRICE	1:125	6 MAY 1974	ELN 2110
CHECKED BY J.T YOUNGS			SHEET No 422

PLOT PLAN - LOWER LEVEL

AS BUILT

PLATFORM NORTH

ZONE 06 — MONORAIL — WORKSHOP — STORAGE — MONORAIL — WALKWAY No 1 — WALKWAY No 2

ZONE 07 — ZONE 08 — ZONE 09 — ZONE 10 — ZONE 11 — ZONE 12 — ZONE 13

FUTURE COMPRESSOR UTILITIES PACKAGE

FUTURE COOLING WATER PUMPS

FIREWATER PUMP HOUSING M25A

STRUCTURE

PIPE RACK TO QP BRIDGE

TOP OF PLATFORM ELEVATION - 23000

AS BUILT
INFORMATION RECEIVED
OCT 1977

INDICATES ERECTOR INSTALLED EQUIPMENT

ZONE	EQUIPT	DESCRIPTION	ELEVATION
07/12	V35A/B	AIR START VESSEL	EL 23795
07/12	M20 A&B	10 TON HOIST	
07	P3	SUMP PUMP	
07	P5	MUD WATER PUMP	
07/12	P6A&B	FIREWATER PUMPS	
07	P7	WASHDOWN PUMP	
07	P18A&B	WATER CURTAIN PUMPS	
07	V18	SUMP CAISSON	
07/12	V11A/B	FIREWATER DIESEL DAY TANKS	
07/12	M35 A/B	TEMP EMERGENCY START Nz BOTTLES	
08	V7	LP VENT SCRUBBER	
06	Q4	FIRE DETECTION: EXTINGUISH SYSTEM	

ZONE	EQUIPT	DESCRIPTION	ELEVATION
07/12	M35 A&B	5 TON HOIST	
08	P18A&B	CONDENSATE BOOSTER PUMPS	
09	P8A&B	CONDENSATE RETURN PUMPS	
09	P9A&B	SLOPS OIL PUMPS	
09	P19A&B	GLYCOL FILL PUMPS	
09	V4	COALESCER	
09	V5	OIL SKIMMER	
09 10	V9	GLYCOL STORAGE TANK	
09/10	V10	DIESEL STORAGE TANK	
09/10	V23	METHANOL STORAGE TANK	
09	V29 A&B	CONDENSATE PULSATION DAMPENERS	

ZONE	EQUIPT	DESCRIPTION	ELEVATION
07/12	M26 A&B	5 TON HOIST	
09	V30 A&B	SLOPS OIL PULSATION DAMPENER	
06	Q 15	MISC TREATMENT UNIT	
10	P4A&B	MUD PROCESS PUMPS	
10	P8A&B	DIESEL PUMPS	
10	P12A&B	METHANOL METERING PUMPS	
06	M16A&B	5 TON HOIST	
10	V13A&B	MUD PUMPS DAY TANKS	
10	V21	DIESEL FILTER	
10	V24	HP FLARE SCRUBBER	
10	V27	CEMENT SURGE TANK	

ZONE	EQUIPT	DESCRIPTION	ELEVATION
10	SP35A&B	DIESEL OIL FILTER	
10	P18A&B	DIESEL OIL PUMP	
10	V29	SLURRY TUB	
09	M21	5 TON HOIST	
10	V32A&B	HEATING PULSATION DAMPERS	
10	P17A&B	METHANOL TRANSFER PUMPS	
11	M10A/B	MUD PIG LAUNCHERS	
11	P11	MUD REC REGULATION PUMP	
11	Q2	MUD AIR COMP PACKAGE	
11	Q5	INST & UTILITY AIR COMP PACKAGE	
10	SP35A&B	DIESEL OIL COALESER	
13	M17A&B	CONDENSATE BOOM & BURNERS	

REVISIONS	DATE	APP
REVISED AS INDICATED	10 8 76	RS
REVISED AS NOTED. THIS ALSO INCLUDES GENERAL CHANGES	11 3 76	RS
ADDED PIPERS, SP 35A&B & P18A&B	4 1 77	RS
ISSUED TO OPERATORS	9 MAR 77	RS
AS BUILT		

REVISIONS	DATE	APP
REVISED AS INDICATED	11 8 76	RS
REVISED AS INDICATED	28 APR 77	RS
APPROVED FOR CONSTRUCTION		

DOCUMENT APPROVAL
BY
DATE 4 / 10 / 77

29 Apr 1977

ELF-NORGE
FRIGG FIELD

TREATMENT PLATFORM M01
JOB 1-40-02

McDERMOTT – HUDSON
LONDON – ENGLAND

C.E. REEVE	1:125	27 SEPT 76	ELN 8110
J.T. YOUNGS			425

PLOT PLAN – CELLAR DECK

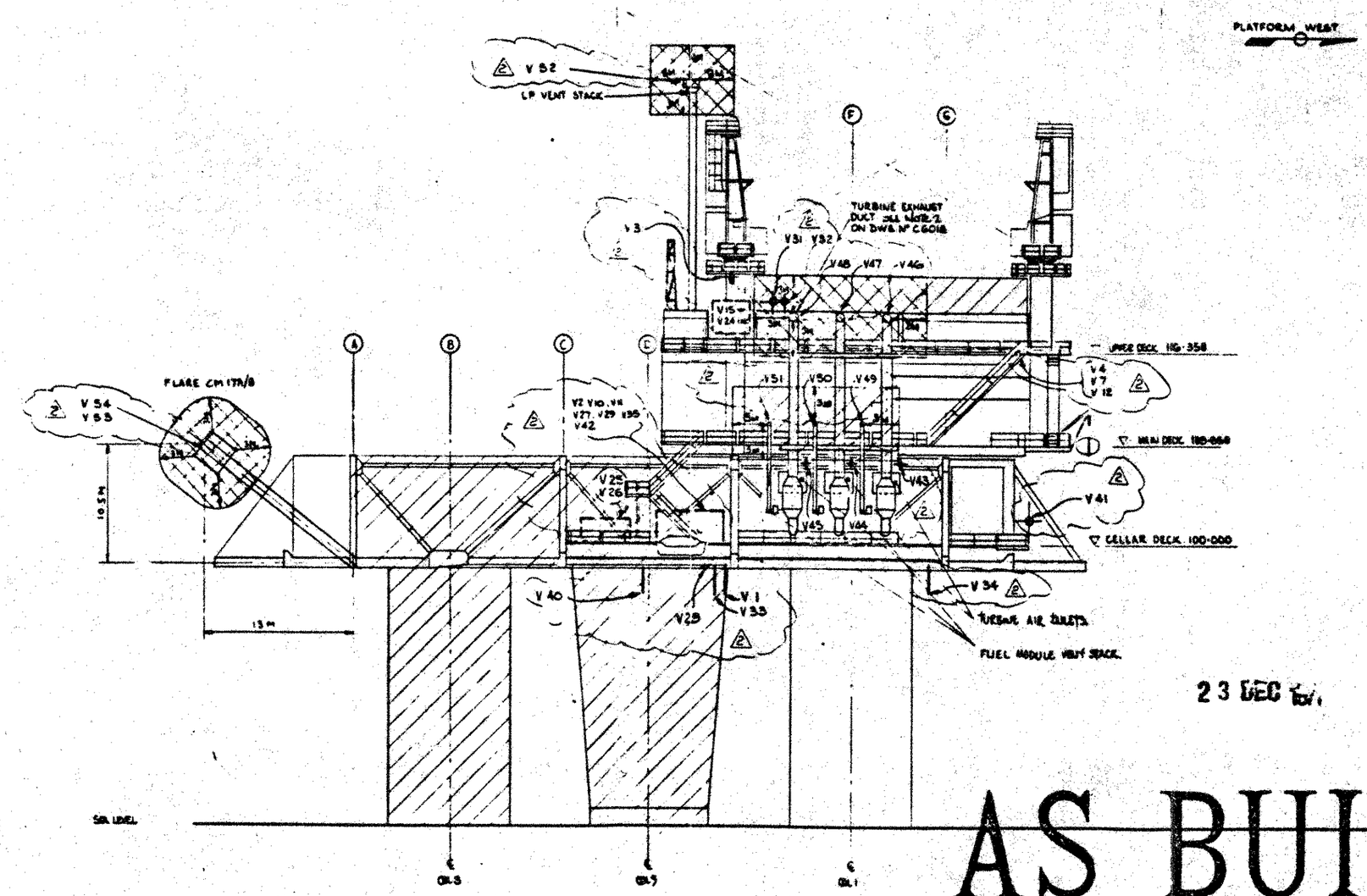

23 DEC 1976

-HOLD-
METHANOL UNLOADING POSITION

AS BUILT

KEY PLAN

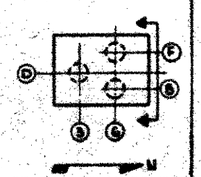

LEGEND

- ZONE 1
- ZONE 2
- SAFE AREA

NOTES

1. HAZARD CLASSIFICATION OF AREA IS IN ACCORDANCE WITH INSTITUTE OF PETROLEUM CODE OF PRACTICE, PARTS 1 AND 8.
2. PLATFORM REFERENCE EL 100.000 IS THE THEORETICAL TOP OF STEEL EL OF LOWER CHORD OF MAIN TRUSSES 100.000 M = 27.540 ABOVE L.A.T.
3. THE AREA CLASSIFICATION FOR THE COLUMNS IS AS FOLLOWS:- COLUMN 1 - UNCLASSIFIED, COLUMNS 3 & 5 - ZONE 2.
4. V1 ETC DENOTES ATMOSPHERIC DISCHARGES. FOR FURTHER DETAILS SEE PLANS AS LISTED IN REFERENCE DRAWINGS TABLE

REFERENCE DRAWINGS

DRG. NO	SHT. NO.	TITLE
ELN 2169	C6011	HAZARD CLASSIFICATION CELLAR DECK SOUTH WEST
"	C6012	" " SOUTH EAST
"	C6013	" " NORTH WEST
"	C6014	" " NORTH EAST
"	C6015	" MAIN DECK
"	C6016	" UPPER DECK
"	C6018	" WEST ELEVATION

DESIGN	ELEC	INSTR	PIPING	STRUCT	NO	BY	DATE	REVISIONS	DATE	APP
					2	AP	15.6.77	ATMOSPHERIC DIRECT DISCHARGE ADDED		
					1	JDH	6.9.77	FLARE BOOMS CM17A/B ADDED		

DESIGN	ELEC	INSTR	PIPING	STRUCT	NO	BY	DATE	REVISIONS	DATE	APP
					3	BH	18.5.76	ISSUED FOR CONSTRUCTION.		
					C	AHS	25.4.76	ISSUED FOR CONSTRUCTION, CLIENT APPROVAL.		
					B	BH	26.1.76	REVISED TO ENG'R RECOMMENDS & ISSUED FOR APPROVAL		
					A	EDMC	27.5.76	ISSUED FOR APPROVAL. (PINK PRINT)		

CUSTOMER APPROVAL
BY
DATE 14.5.76

ELF—NORGE
FRIGG FIELD

TREATMENT / COMPRESSION PLATFORM No.2

NORTH SEA JOB 1-40-E2 WD. 104-M.

McDERMOTT — HUDSON
LONDON — ENGLAND

DRAWN BY	SCALE	DATE	DWG. NO
E. DMC	1:200	12 SEPT 1975	ELN 2169
			SHEET NO C6017

HAZARD CLASSIFICATION. PART SECTION 'D-D' NORTH ELEVATION

DWG NO ELN 2110 | SHEET NO 749

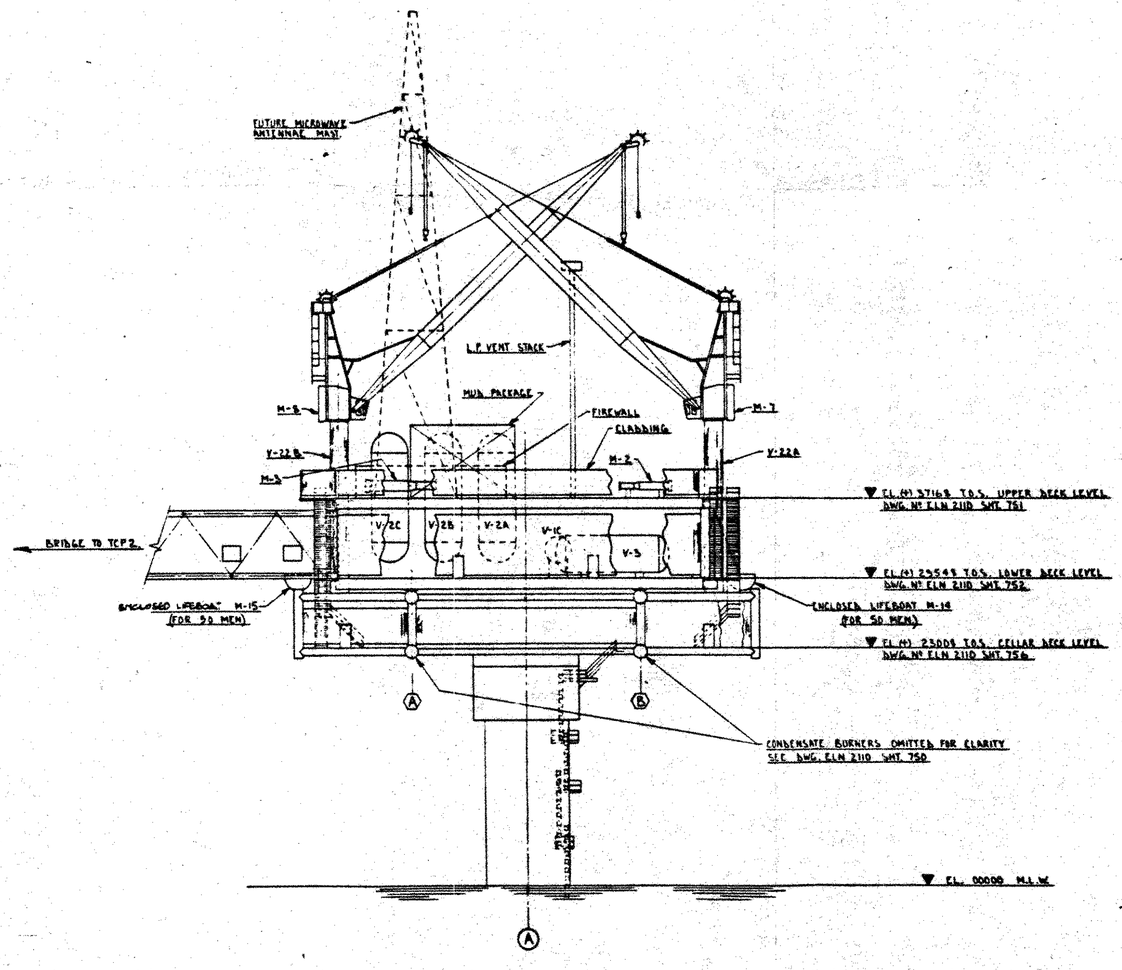

ELEVATION LOOKING SOUTH
(SIDING & FUTURE COMPRESSORS OMITTED FOR CLARITY)

23 DEC 1977

AS BUILT

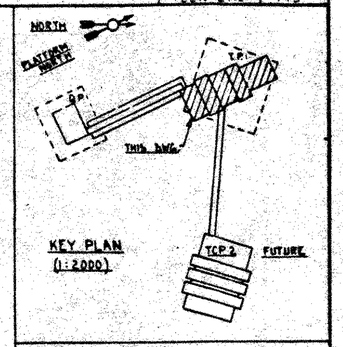

KEY PLAN
(1:2000)

LEGEND

GENERAL NOTES

(1) ALL DIMENSIONS ARE IN MM.

CUSTOMER APPROVAL
BY
DATE 18.6.75

REFERENCE DRAWINGS

DWG Nº	SHT. Nº	TITLE
ELN 2110	748	FIRE & SAFETY LEGEND
ELN 2110	750	FIRE & SAFETY LAYOUT - NORTH ELEV.
ELN 2110	751	FIRE & SAFETY LAYOUT - UPPER LEVEL
ELN 2110	752	FIRE & SAFETY LAYOUT - LOWER LEVEL
ELN 2110	756	FIRE & SAFETY LAYOUT - CELLAR DECK

AS BUILT
TO INFORMATION RECEIVED UP TO Aug 1977

ENGINEERS APPROVAL

ELF-NORGE
FRIGG FIELD

TREATMENT PLATFORM Nº1
NORTH SEA JOB 1-40-C2 W.D 104 M

McDERMOTT - HUDSON
LONDON - ENGLAND

DRAWN BY	SCALE	DATE	DWG NO
D. MOORE	1:200	7-2-75	ELN 2110
			749

FIRE & SAFETY LAYOUT - NORTH ELEVATION

2110-749

FAB STDS REQ'D THIS SHT

DESIGN	STRUCT	PIPING	ELEC	MK	BY	DATE	REVISIONS	DATE	APP

DESIGN	STRUCT	PIPING	ELEC	MK	BY	DATE	REVISIONS	DATE	APP

DESIGN	STRUCT	PIPING	ELEC	MK	BY	DATE	REVISIONS	DATE	APP

DESIGN	STRUCT	PIPING	ELEC	MK	BY	DATE	REVISIONS	DATE	APP
				3	JN	7.10.77	ISSUED AS BUILT		
				2		6.2.76	PLACED IN ENGINEER COMMENTS		
				1	DA	17-6-75	ISSUED FOR CONSTRUCTION		
				0	DM	2-4-75	ISSUED FOR APPROVAL		

DWG NO ELN 2110 | SHEET NO 750

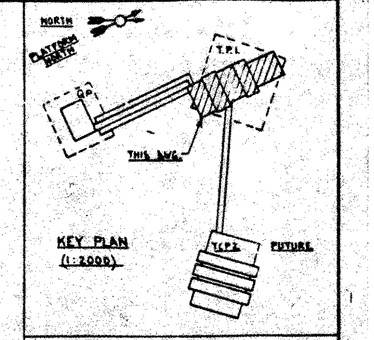

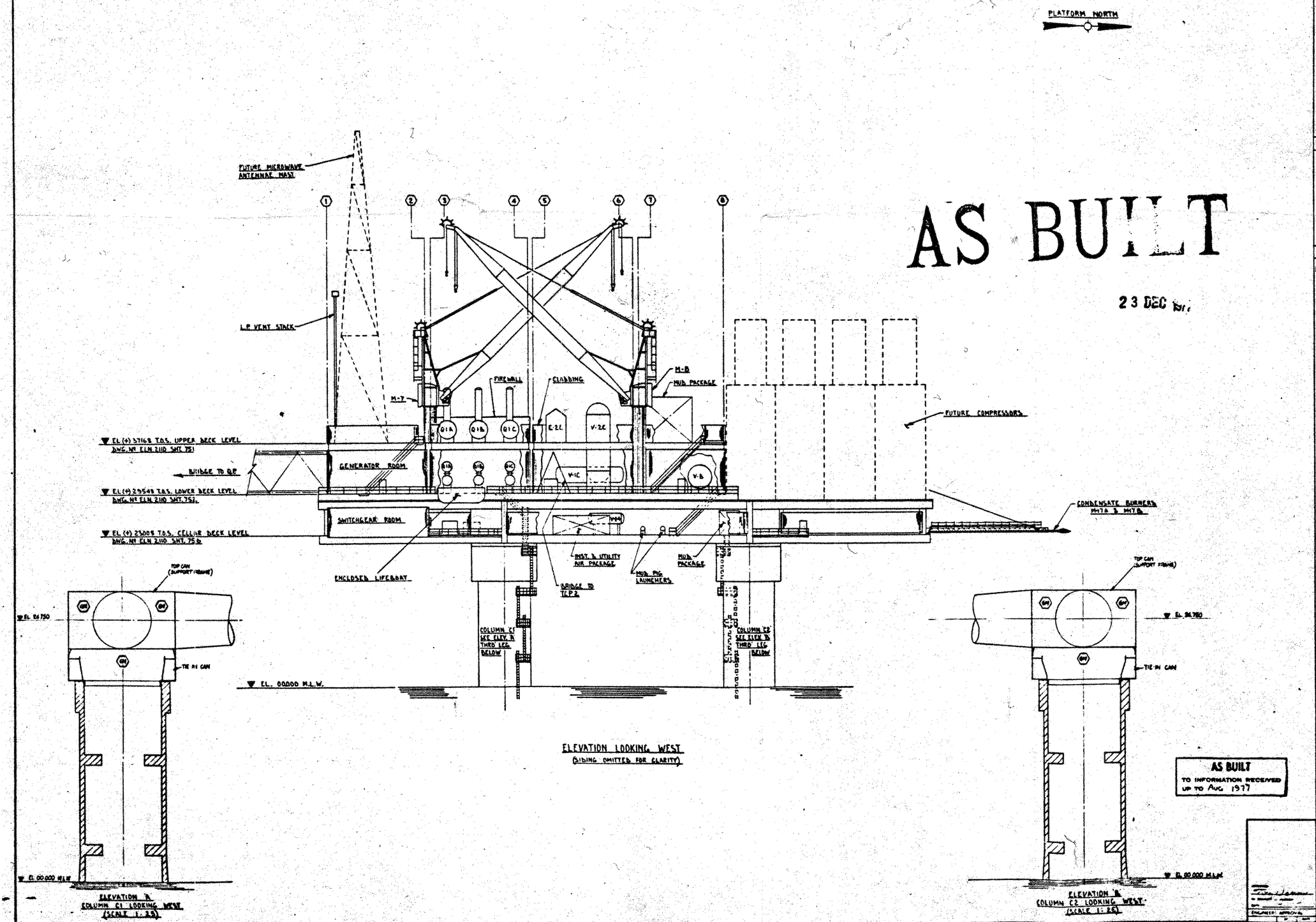

ELEVATION LOOKING WEST
(SIDING OMITTED FOR CLARITY)

ELEVATION 'A'
COLUMN C1 LOOKING WEST
(SCALE 1:25)

ELEVATION 'B'
COLUMN C2 LOOKING WEST
(SCALE 1:25)

AS BUILT

23 DEC 1977

AS BUILT
TO INFORMATION RECEIVED UP TO AUG 1977

LEGEND

GENERAL NOTES

(1) ALL DIMENSIONS ARE IN MM.

REFERENCE DRAWINGS

DWG Nº	SHT. Nº	TITLE
ELN 2110	748	FIRE & SAFETY LEGEND
ELN 2110	749	FIRE & SAFETY LAYOUT-NORTH ELEV.
ELN 2110	751	FIRE & SAFETY LAYOUT-UPPER LEVEL
ELN 2110	752	FIRE & SAFETY LAYOUT-LOWER LEVEL
ELN 2110	756	FIRE & SAFETY LAYOUT-CELLAR DECK

2110-750

ELF - NORGE
FRIGG FIELD

TREATMENT PLATFORM Nº1
NORTH SEA — JOB 1-40-C2 — W.D 104 M

McDERMOTT - HUDSON
LONDON — ENGLAND

DRAWN BY	SCALE	DATE	DWG NO
D. MOORE	1:25	4-2-75	ELN 2110
DESIGNED BY			SHEET NO 750

FIRE & SAFETY LAYOUT - EAST ELEVATION

REVISIONS	DATE	APP
ISSUED AS BUILT	7.10.77	BAP
ISSUED FOR CONSTRUCTION	2.6.75	ZS
ISSUED FOR APPROVAL	2.4.75	ZS

CUSTOMER APPROVAL
BY
DATE 28-6-75

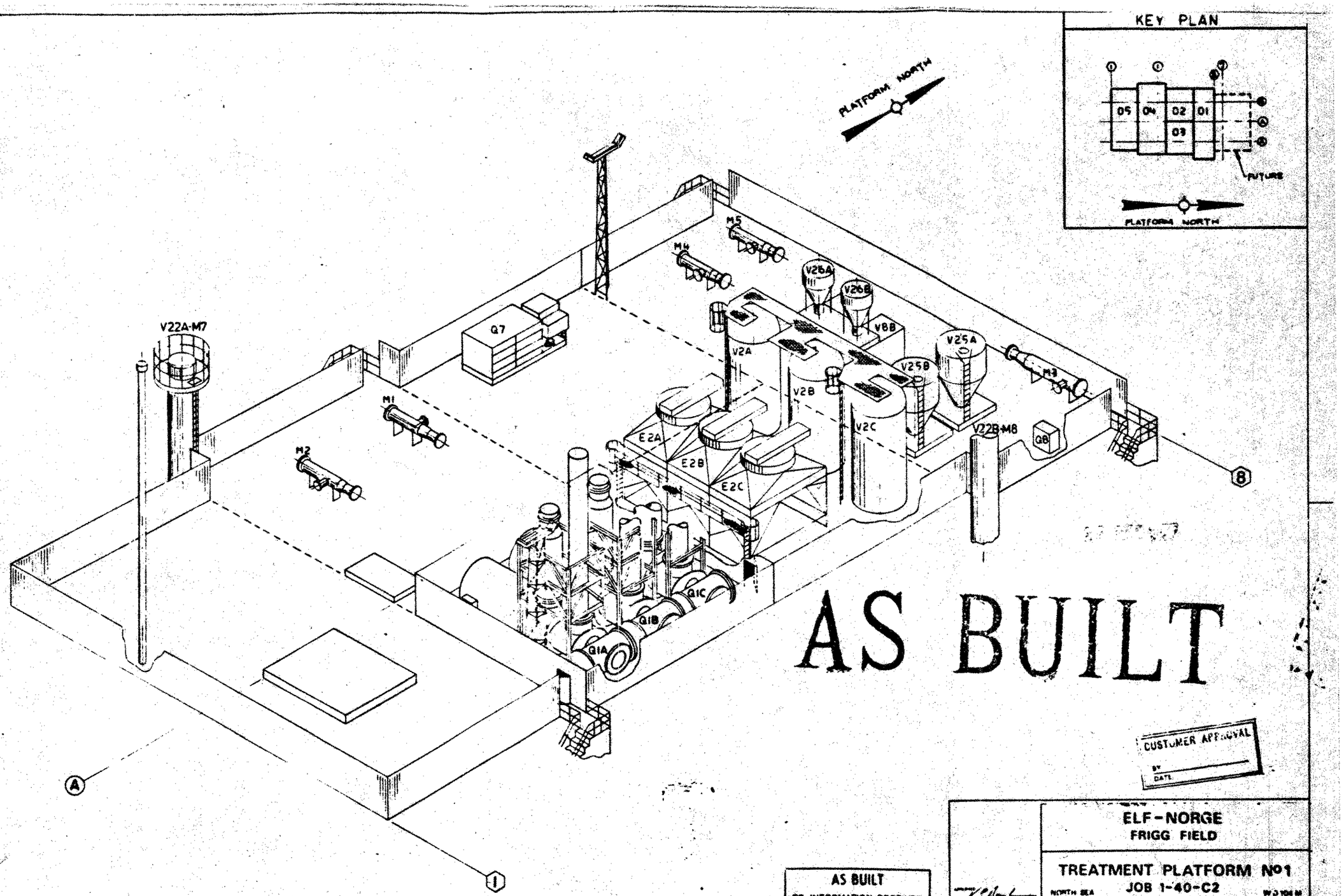

AS BUILT

CUSTOMER APPROVAL
BY
DATE

AS BUILT
TO INFORMATION RECEIVED UP TO AUG. 1977

ELF-NORGE
FRIGG FIELD

TREATMENT PLATFORM No1
NORTH SEA — JOB 1-40-C2 — W.D. 104 M

McDERMOTT — HUDSON
LONDON — ENGLAND

DRAWN BY	SCALE	DATE	DWG NO
C.GRIFFITHS	N.T.S.	4-3-75	ELN 2110
DESIGNED BY			7072

UPPER LEVEL —

FAB STDS REQ'D THIS SHT	DESIGN	ELEC	INSTR	PIPING	STRUCT	NO	BY	DATE	REVISIONS	DATE	APP
						4			AS BUILT ISSUE		

DESIGN	ELEC	INSTR	PIPING	STRUCT	NO	BY	DATE	REVISIONS	DATE	APP
					0	EA		ISSUED FOR PRINC		
					1	CG		ISSUED FOR APPROVAL	7.7.75	
					2	CB		ISSUED FOR CLIENT SIG & A.F.C.		
					3	DM		ISSUED FOR OFF SHORE		

CUSTOMER APPROVAL
BY
DATE 7.7.75

ENGINEERS APPROVAL

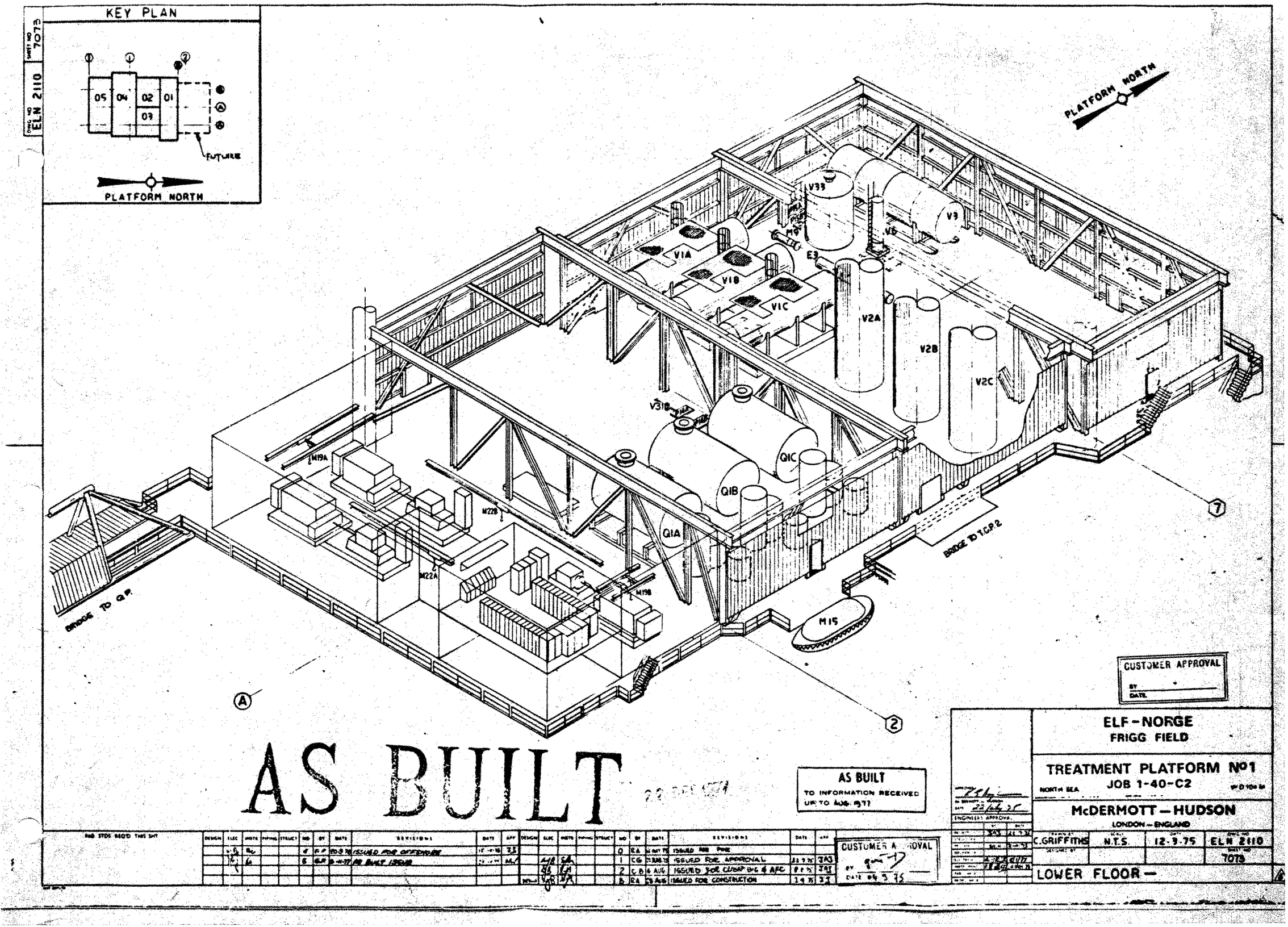
KEY PLAN
05
04
02
01
03
FUTURE
PLATFORM NORTH
PLATFORM NORTH
V33
V3
V6
M9
E3
V1A
V1B
V1C
V2A
V2B
V2C
V31B
Q1C
Q1B
Q1A
M19A
M22B
M22A
M19B
M15
BRIDGE TO T.C.P.2
BRIDGE TO Q.P.
A
2
7
CUSTOMER APPROVAL
BY
DATE
AS BUILT
AS BUILT
TO INFORMATION RECEIVED
UP TO AUG. 1977
ELF-NORGE
FRIGG FIELD
TREATMENT PLATFORM No1
NORTH SEA
JOB 1-40-C2
McDERMOTT — HUDSON
LONDON — ENGLAND
C.GRIFFITHS
N.T.S.
12-3-75
ELN 2110
7073
LOWER FLOOR —
CUSTOMER APPROVAL
BY
DATE 04.5.75
ISSUED FOR OFFSHORE
AS BUILT ISSUE
ISSUED FOR APPROVAL
ISSUED FOR CLIENT BIG & AFC
ISSUED FOR CONSTRUCTION
ENGINEERS APPROVAL
22 July 75

KEY PLAN

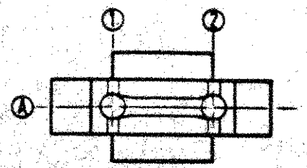

SHEET NO 7074

DWG NO ELN 2110

PLATFORM NORTH

M17A

M17B

M16A

M16B

P2C

P2B

P2A

P13B

P13A

P1B

P1A

V9

V10

V5

V7

V3

V2B

V2A

V12B

V12A

P12B

P12A

V11A

V11B

P8A

P8B

M24A

M23A

M22A

M22B

M21A

M21B

M20A

M20B

V13 & P3

P7

M10B

M10A

P11

Q2

Q5

INSTRUMENT INTERFACE ROOM Nº1

AIR CONDITIONING ROOM

415V SWITCHGEAR

INSTRUMENT INTERFACE ROOM Nº2

TRANSFORMER ROOM

AS BUILT

22 DEC 1975

AS BUILT
TO INFORMATION RECEIVED UP TO Aug 1975

CUSTOMER APPROVAL
BY:
DATE 22.12.75

FAB STDS REQ'D THIS SHT	DESIGN	ELEC	INSTR	PIPING	STRUCT	NO	BY	DATE	REVISIONS	DATE	APP
						4	GR	8-9-77	AS BUILT REVNS		

DESIGN	ELEC	INSTR	PIPING	STRUCT	NO	BY	DATE	REVISIONS	DATE	APP
					0	RA	24 MAY 75	ISSUED FOR PDR		
					1	TW	26.6.75	ISSUED FOR CLIENT APPROVAL	7.7.75	RT
					2	RB	15.7.75	ISSUED FOR CLIENT DOC & A.F.C.	28.7.75	RT
					3	RB	20.9.75	ISSUED FOR OFFSHORE	17.10.75	RT

ENGINEERS APPROVAL

	BY	DATE

ELF-NORGE
FRIGG FIELD

TREATMENT PLATFORM Nº1
NORTH SEA JOB 1-40-C2 WD 1061 M

McDERMOTT — HUDSON
LONDON — ENGLAND

DRAWN BY	SCALE	DATE	DRG NO
T.WILLIAMS	N.T.S.	11.3.75	ELN 2110
DETAILED BY T.WILLIAMS			SHEET NO 7074

CELLAR DECK -

ELN 2110 - 7074

General Description of the Platforms

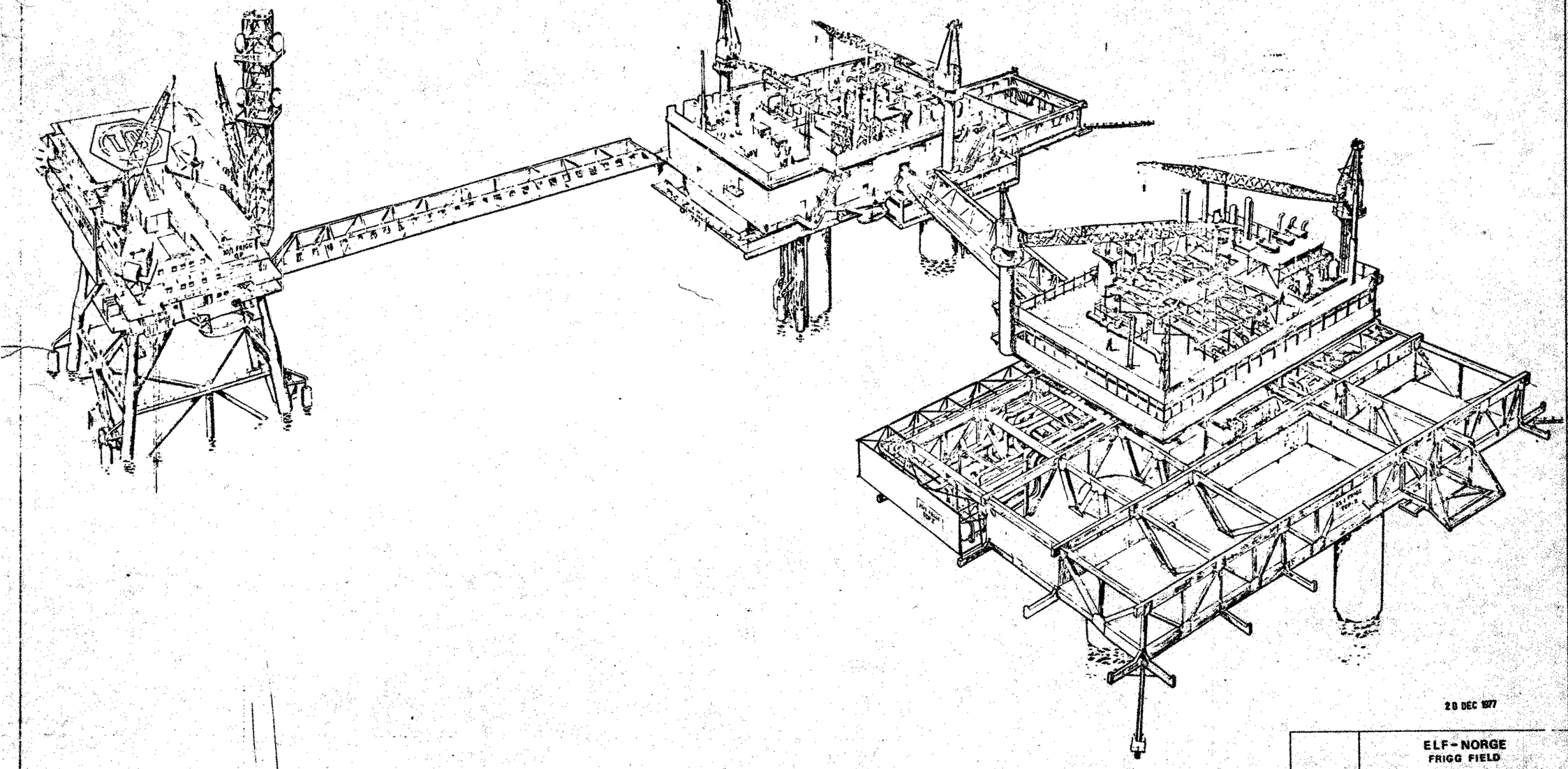

20 DEC 1977

ELF-NORGE
FRIGG FIELD

TREATMENT/COMPRESSION COMPLEX
FRIGG FIELD NORTH SEA

OCEANIC CONTRACTORS INC.

DRAWN BY	SCALE	DATE	DWG NO
J. W. DONALD	N.T.S.	8 SEPT 76	
DESIGNED BY			SHEET NO

FAB. STDS. REQ'D. THIS SHT.

DESIGN	ELEC	INSTR	PIPING	STRUCT	NO	BY	DATE	REVISIONS	DATE	APP	DESIGN	ELEC	INSTR	PIPING	STRUCT	NO	BY	DATE	REVISIONS	DATE	APP	DESIGN	ELEC	INSTR	PIPING	STRUCT	NO	BY	DATE	REVISIONS	DATE	APP

On board TP1, the treatment of gas from CDP1 (and if necessary from DP2) is effected by three drying lines (two operational and one spare) with a unit daily capacity of 15 million cubic metres. Gas and condensate are then exported through one of the two 32" diameter gas lines connecting Frigg with St. Fergus in Scotland.

Also located on TP1 is the mud plant. This is used to 'kill' the wells on the drilling platforms in the event of a blow out, and is connected to CDP1 and DP2 by means of 8" diameter sub-sea pipelines.

Power generation on TP1 is by three gas turbine/alternator sets each capable of producing 3.5 megawatts, enough power for TP1, CDP1 and QP and, if necessary, TCP2 and DP2.

The TP1 platform is connected by means of bridges to both the Quarters Platform and TCP2.

GENERAL DATA

Climatic and Sea Data

3.1 Climatic and Sea Data

For details of the climatic and sea data please refer to the report by A.H. Glenn and Associates reproduced in section 3.1 of Volume 1 of QP Job Book.

PRINCIPLES OF DESIGN

Principles of Mechanical, Instrument, Electrical and Process Design

TP1 JOB BOOK

VOLUME 1 SECTION 4

PRINCIPLES OF DESIGN

4.1.1 Principles of Electrical Design

During normal operating conditions the primary power source is provided at 5.5 KV by three 3.5 MVA generators on TP1 and by three 1.75 MVA generators on TCP2. The number of generators being run at any time will be a function of power requirements and maintenance, allowance being made for one machine out of each set of three being down at any one time.

The 5.5 KV electrical supply is a ring system linking the high voltage switchboards on TP1, TCP2 and QP, and hence there are two routes for power to be supplied to each platform. The reason for this is to reduce the probability of loss of 5.5 KV power at any platform. For example, if power generation is taking place on TP1 only, and a fault were to develop in the TP1/QP link, power could still be supplied to QP via TCP2.

The treatment complex also provides primary power for CDP1 and DP2 by means of submarine cables from QP and TCP2 respectively.

In the event of complete loss of 5.5 KV generation, an emergency generation package located on QP will automatically start up. These generators supply power at 380v directly to the 380v motor control centres on TP1, TCP2 and QP. CDP1 and DP2 have their own emergency supplies.

On the following pages are summaries of the power requirements under normal operating conditions for the whole field and the treatment complex under emergency conditions.

	TP1	QP	DP1	PHASE 1 TOTAL	TCP2	DP2	FIELD TOT		
Continuous Load (A) in KW	1390	1014	1107	3511	1303	434	5248		
Standby Load (B) in KW	932	125	500*	1557	767	300 *	2624		
Intermittent Load (C) in KW	550	475	336*	1361	642	200 *	2203		
Minimum Run in KVA (D) (A/P.F.)	1544	1127	1277	3947	1448	510	6991		
Maximum Run in KVA (E) (A+C)/(P.F.)	2155	1654	1677	5485	2161	745	8392		
Maximum Run in KVA (F) Rationalised (A+KC)/(P.F.)	1944	1323	1490	4757	2018	596			
Connected KVA (G) (A+B+C)/(P.F.)	3191	1793	2281	5265	3013	1037	11315		
Available Supply (H) in KVA	← 7000 →			7000	← 3500 →		10500		
Plant Utilisation Min. Run (D/H)	0.22	0.16	0.18	0.56	0.41	0.14	0.55		
Plant Utilisation Max. Run (E/H)	0.3	0.24	0.24	0.78	0.61	0.21	0.82		
Plant Utilisation Max. Run (F/H)	0.25	0.19	0.19	0.63	0.57	0.17	0.74		

LEGEND

P.F. = 0.9

K = 0·8 " " OF UTILISATION.

* = ESTIMATED

McDERMOTT - HUDSON
LONDON ENGLAND
LOAD DATA COLLECTION SHEET

PROJECT No. 2168/2111/8
REVISION No.
SHEET 2 OF 16 (10.9.76)

	APPROVED	DATE
ELECT.	[illegible]	2/12/75
PROJ.	[illegible]	2/12/75
CLIENT	[illegible]	[illegible]

McDERMOTT - HUDSON
LONDON ENGLAND
LOAD DATA COLLECTION SHEET

PROJECT No. 2169/2111/8
REVISION No.
SHEET 1 OF 16 (10.9.76)

	TP1 EMERG 5.5	TP1 EMERG (380)	QP EMERG	T PHASE 1	TCP2 EMERG 5.5	COMPLEX TOTAL
Continuous Load (A) in KW	190	100	811	1101	142.5	1243.5
Standby Load (B) in KW	102	-	60	162	111	273
Intermittent Load (C) in KW	100	22	224	346	79	425
Minimum Run in KVA (D) (A/P.F.)	237.5	125	901	1263	178	1441
Maximum Run in KVA (E) (A+C)/(P.F.)	365	152	1150	1667	277	1944
Maximum Run in KVA (F) Rationalised (A+KC)/(P.F.)	273	130	920	1323	257	1580
Connected KVA (G) (A+B+C)/(P.F.)	490	177	1216	1883	416	2299
Available Supply (H) in KVA				1250		
Plant Utilisation Min. Run (D/H)	0.18	0.10	0.72	1.00	0.14	1.14
Plant Utilisation Max. Run (E/H)	0.3	0.12	0.92	1.34	0.22	1.56
Plant Utilisation Max. Run (F/H)	0.17	0.10	0.73	1.05	0.2	1.26

LEGEND

P.F. = 0.9

K = 0.8 COEFF OF UTILISATION

PHASE 1 = TP1 + QP.

	APPROVED	DATE
ELECT.		2/12/75
PROJ.		2/12/75
CLIENT		12.12.75

4.1.1.1 Alternators, Generator Package

The Treatment Platform No. 1 is equipped with three 3.5 MVA gas turbine driven alternators located in module 05. Each alternator is rated at 3500 KVA at 0.8 power factor, 5500 volt 50 Hz, 3 phase at 1500 rpm, type brushless salient pole synchronous. The prime mover for each generator is a Ruston gas turbine type TD 4000 developing 4730 H.P. at an output shaft speed of 1500 rpm. The starting of the generators is effected by V8 Detroit Diesel.

4.1.1.1.1 Generator Earthing System

Earthing of the system is by permanently connected 17 OHMS 190 amp resistors between the neutral of each generator and earth. The valve of 17 OHMS was chosen as a compromise between, limiting the possible flow of third harmonic currents circulating between the generators on the distribution system and the need to have adequate earth fault current to operate the protection relays, in particular the relationship of setting of the circulating current protection on the ring main feeders to the earth fault current available from one generator necessitating the use of special ratio current transformers on the ring main circuits. The earth fault current contribution of each generator is limited to less than 190 amps.

4.1.1.1.2 Generator Controls

Generator Control Console - The following functions are available on the generator main control console:

	Push Button	Indicator	Switch
Ammeter		X	
Voltmeter		X	
Frequency meter		X	
Power factor meter		X	
Temperature		X	
Auto. temp. scanner		X	
Start	X		
Stop	X		
Lower volts			X
Raise volts			X
Lower speed			X
Raise speed			X
Fault trip alarm unit		X	
Emergency stop	X		
Fault pre-warning alarm unit		X	

Alarms and Shutdowns

The following alarms and shutdowns are indicated on the annunication panel that is provided with the turbine control panel.

	Lamp	Alarm	Shutdown
High exhaust temperature		X	X
High lubricating oil temp.		X	X
Low lubricating oil press.			X
Flame failure no. 1		X	
Flame failure no. 2		X	
Flame failure no. 3		X	
Flame failure no. 4		X	
Four flames out			X
High temp. spread		X	
Start failure			X
Overspeed			X

	Lamp	Alarm	Shutdown
Governor failure			X
Low gas fuel pressure		X	
De-mister high liquid level			X
Excess vibration			X
Blow-in door open		X	
Generator bearing high temp.		X	
Battery volts low		X	
Circuit breaker fault trip			X
Fire			X
Gas			X
Ready to run	X		
Running	X		
A.C. supply on	X		
A.C. auxiliaries on	X		
Gas block system vented	X		
Generator winding temp. high		X	X
Starting diesel engine failure		X	X

4.1.1.2 5.5 KV Switchgear

The 5.5 kV switchboard is a Whipp and Bourne sheet steel, fully interlocked, air insulated marine pattern switchboard. It is divided into three sections designated 'A', 'B' and 'C'. From sections 'A' and 'C' the main 380V distribution is fed via two 1 MVA transformers. Bus section 'C' also supplies 5.5 kV to TCP2 and bus section 'A' provides high voltage supplies to Quarters Platform.

4.1.1.3 380 Volt System

Transformers T1 and T2 are 1000 kVA 5500/380 volt Askerel filled transformers located in the transformer room on pancake 06 on the cellar deck.

Both have a Delta/Star configuration with a brought out neutral on the low voltage side, and are connected between the 5.5 kV switchboard and the 380 volt motor control centre.

The 380 volt motor control centre is a sheet steel fully interlocked marine pattern switchboard. The bus bars are split into two sections 'A' and 'B', interconnected by an air circuit breaker and are rated at 2500 amps.

The following is a list of the loads of each bus section:

Bus Section 'A'

	Battery and Control Distribution DB4
P22A	Hydraulic Power Unit
	110 volt transformer
	Workshop busbar feeder
	Fire pumphouse P6A H & V
	Welding outlets
	P2A lube oil pump
P18A	TA1 fuel boost pump
P17A	Methanol transfer pump
P12A	Methanol pump
P16A	Water Curtain pump
P19A	TA1 fuel injection pump
	Air conditioning supply fan no. 1
M15	Life craft hoist
Q5A	Instrument & Utility Air compressor
P2A	Condensate return pump
T.H. Train 1	Trace heating train 1
1HA	Glycol immersion heater A
P3	Sump pump
P9A	Slops oil pump
P8A	Diesel transfer pump
P1A	Condensate booster pump

T.H. train 3	Trace heating train 3
1HC	Glycol immersion heater C
P13A	Glycol fill pump
E2A	Air cooler fan
E2C	Air cooler fan
	Emergency board DB8
P10F	Glycol pump
B10E	Glycol pump
P10B	Glycol pump
P10A	Glycol pump
	TA3 auxiliary lube oil pump
	TA3 lube oil heater
	TA3 CACAC fan 'A'
	TA3 CACAC fan 'B'
	TA3 anti-condensation heaters
	TA3 blow-in door heater
	TA3 lube oil cooler fan
	TA1 lube oil cooler fan
	TA1 auxiliary lube oil pump
	TA1 lube oil heater
	TA1 CACAC fan 'A'
	TA1 CACAC fan 'B'
	TA1 anticondensation heater
	TA1 blow-in door heater
	Generator house vent fan no. 1

Bus Section 'B'

	TA2 auxiliary lube oil pump
P18B	TA2 fuel boost pump
	TA2 lube oil heater
	TA2 CACAC fan 'A'
	TA2 CACAC fan 'B'
	TA2 anti-condensation heater
	Generator house vent fan no. 2
	TA2 blow-in door heater
	Air conditioning 24v transformer supply
P2B	Lube oil pump P2B

	Maintained lighting DB1
	Generator building DB5
	24v DC power pack system
	TA2 lube oil cooler fan
	Transformer room pressurisation fan
	Immersion heater
	Air conditioning supply fan no. 2
	Battery room H & V
	Liquid chiller
	Future compressor auxiliary supplies
	Heater batteries - generator room
	Heater batteries - switchgear room
P10C	Glycol pump
P10D	Glycol pump
	Recirc. pump 'A' colume 'C1'
	Slops oil pump
	Diesel transfer pump
T.H. train 2	Trace heating train 2
1HB	Glycol immersion heater 'B'
P13B	Glycol fill pump
E2B	Air cooler fan
	DB 11A & DB 11B feeder
P2B	Condensate return pump
	Recirculation pump 'B' column 'C1'
P1B	Condensate pump
P17B	Methanol transfer pump
P12B	Methanol pump
M14	Life boat hoist
P15B	Condensate recycle pump
	Recirculation pump 'A' column 'C2'
M11A	Mud agitator 'A'
M11C	Mud agitator 'C'
Q2	Mud air compressor
P11	Mud recirculation pump
	Recirc. pump 'B' column 'C2'
M11B	Mud agitator 'B'
M11D	Mud agitator 'D'
P19B	TA2 fuel injection pump

P5	Mud water pump
Q5B	Instrument & Utility air compressor
P7	Washdown pump
	Workshop heating & ventilation
P16B	Water cutain pump
	Lighting DB2
	Power DB3
	Welding outlets
	Fire pump diesel heaters
	Fire pump house P6B H & V
	Welding outlets
	Interface room no. 1 & cabling room heating
P22B	Hydraulic power unit
	110 volt transformer

4.1.1.4 Control Console

This has been designed and installed to provide central control facility for the generation and distribution of power on TP1. The unit comprises a mimic showing an alarm light for each distribution circuit. Faults are indicated by the illumination of the relevant light and sounding of the warning hooter. Alarm/cancel push buttons are provided that cancel the audible alarm. The light is only extinguished when the fault has cleared.

The control console comprises of the following sections:

(a) Generator TA1
(b) Generator TA2
(c) Generator TA3
(d) Alarm and load shedding equipment
(e) Desk section
(f) QP generators DA1 and DA2
(g) TCP2 generator TA4
(h) TCP2 generator TA5
(i) TCP2 generator TA6

The system is interconnected with TP1 and TCP2 and the interconnecting bridges have red lights positioned at their centres. Electrical power of 220 volts 50 Hz single phase is from a power control unit located on QP with back up power from a 24 HR diesel generator supply.

The lights are initiated by photo electric cells located on QP or by the manual override switch in the QP control room.

When the lights are switched on, the power control unit will emit a morse code letter 'U' to all the connected platforms thus ensuring the lights operate in unison.

On failure of the 15 mile lights, the standby 10 mile white light will automatically come on, being fed with power from the control unit on QP, and an alarm registered on the QP safety panel.

The main fog horn is fed by a 220 volt supply from a control panel located on QP which also feeds TP1 and TCP2 and ensures all foghorns operate in unison. The main foghorn has a range of 2 sea miles and is located at the S.W. end of the platform. The control panel is fed from the same 1000 ampere-hour battery as the red and white standby lights. Initiation of the foghorn is manual from the QP radio room.

The standby foghorns have a range of $\frac{1}{2}$ a sea mile and are supplied with 220v 50 Hz with 24 Hr diesel generator back up. On failure of one or more of the main foghorns on QP, TP1 and TCP2 platforms the standby $\frac{1}{2}$ mile foghorns will automatically be energised and an alarm given in the Quarters Platform Control room on the safety panel.

4.1.1.5 Lighting

Lighting circuits are fed from the 220v 50 Hz system. Normal indoor lighting is rapid start fluorescent. Normal outdoor lighting is fluorescent and floodlight. Lighting systems are split into three categories:

(a) Normal lighting, supplied from a distribution board connected to the main power system.

(b) Emergency lighting, supplied from a distribution board connected to the emergency power system. The emergency system includes lifeboat lighting, boat landing lighting and crane supplies.

(c) Emergency maintained lighting, supplied from the same distribution board as (b) but each unit shall be supplied as a self-contained emergency unit complete with rechargeable batteries and automatic changeover facilities.

4.1.1.6 Emergency Power

Emergency power is available from the Quarters Platform via separate feeders for:

(a) Operation of essential lighting, pump, compressors, and presurisation unit and

(b) 'Black Start' of TP1 gas turbines.

4.1.1.7 Navigation Aids

Navigation aids are divided into 2 sections: (a) visual and b) audible. All the equipment is manufactured by Wallace Tiernan.

Visual navigation aids on TP1 consist of 2 white lights (15 mile and 10 mile lights) and four 3 mile red lights.

All the standby foghorns are fed via a pulse generator which switches them on and off in unison giving the morse code letter 'U'.

4.1.1.8 Hazardous Areas

Hazard classification of area of Treatment Platform No. 1 is in accordance with the Institute of Petroleum Code of Safe Practice Parts 1 and 8.

The area classifications are:

Non-Hazardous Area: An area in which explosive mixtures are not expected to be present in quantities such as to require special precautions for the construction and use of electrical apparatus.

Hazardous Area: An area in which explosive mixtures are, or may be expected to be, present in quantities such as to require special precautions for the construction and use or electrical apparatus.

Hazardous areas are divided into three zones classified in order of decreasing probability of the presence of an explosive mixture.

Zone 0: An explosive mixture is continuously present or present for long periods.

Zone 1: An explosive mixture is likely to occur in normal operation, but is not likely to be present for long periods.

Zone 2: An explosive mixture is not likely to occur in normal operation, and if it occurs it will only exist for a short time.

Treatment Platform No. 1 has the following Zone 1 areas:

(a) Inside the two structural support cans.

(b) Toilets

(c) Methanol loading areas

The above are all located on the cellar deck.

Treatment Platform No. 1 has the following Zone 2 areas:

(a) On the upper deck, the Glycol regeneration Units Q1C, Q1B and Q1A areas.

(b) On the upper deck, an area outlined by the pig launcher (M3) and pig receiver (M5) to the north and to the south by contactors V2A, V2B and V2C and by pig receiver M2.

(c) On the lower deck, the whole area is classified as Zone 2 with the exception of the generation package which is pressurised.

(d) On the cellar deck the fire pump houses are classified safe (pressurised) the remainder are classified Zone 2, the exceptions are outlined above.

On loss of pressure, shutdown is initiated and areas classified safe are reclassified as Zone 1.

4.1.2 Principles of Instrument Design

The instrumentation facilities are designed to monitor and control process requirements for economical gas production with in-built safety systems protecting personnel, equipment and the environment.

The treatment platforms are designed such that the process areas will be unmanned during normal operation, the control and monitoring functions being carried out from the field control room on the Quarters Platform.

4.1.2.1 Field Instrumentation

The instrumentation within the process treatment areas has been designed wherever possible to be pneumatically operated. Where this has not been practical and electrical units have been used, they are either of the intrinsically safe variety or are enclosed in housings approved for the particular hazard classification.

In addition to being automatically or remotely operated there is provision for local control for use during the start-up phase or when faults or malfunction require intervention during normal working.

All the process control and signalling is routed to an interface room on the treatment platform prior to being transmitted to QP. This interface area contains pneumatic to electrical signal convertors together with racked equipment for other facilities such as emergency shut down, fire and gas detection, indication and recording of process measurements and control air distribution, alarms and telephone and public address system. The telemetry marshalling cabinets and the back-up power supply equipment are also located in the interface rooms.

4.1.1.2 Telemetry

All data, alarm and control information is transmitted from TP1, TCP2, CDP1 and DP2 to QP, and vice versa, via the 'CETT' telemetry system. This system is effectively four parts, one for each platform. Each inter platform connection comprises a multi-channel link transmitting the information as electrical digital data on a time-shared basis. Each source of data being 'scanned' by the telemetry link, in rotation, once every two minutes.

Communication between QP and TP1 or TCP2 is via the connecting bridges.

4.1.2.3 Emergency Shutdown System

The emergency shutdown system is a dual operating system. Shutdown of all non-safety equipment can be automatically or manually triggered. The systems which remain operating after shutdown include fire and gas detection systems, communications systems, navigational aids, internal and external emergency lighting. The fire pump start also functions on initiation of emergency shutdown.

The system is designed on a number of levels with the ability for each platform to protect its own equipment but interlinked with all the other platforms to permit the safe and co-ordinated shutdown of the whole field if necessary.

The levels of emergency shutdown are as follows:

First Level - Manual shutdown of the field (QP, CDP1, DP2, TP1 and TCP2), without decompression, by push button from the QP control room.

Second Level - Manual shutdown and decompression of individual platforms by push button from QP control room or the platform affected.

Third Level - Shutdown by local push buttons on individual platforms, or from QP, without decompression.

Automatic shutdown of platforms after fire or gas detection. Electrical supplies in these areas are then automatically isolated except for emergency services.

Fourth Level - Shutdown by local or remote on QP push button of one or all of the streams of gas treatment. Automatic shutdown of one or all of the gas streams by local pressure switches.

Fifth Level - Selective process shutdown, detection of abnormal process conditons.

4.1.2.4 P.A. & Alarm System

The P.A. and alarm system is manufactured by Brodrene Steen-Hansen of Norway, model number PEGFA Mark 25, 000A1,2,4/2500 - 3 x 26 - SV, the output of which is 2500 watts - 1500 watts for QP and TP1 platforms and 1000 watts for TCP2 platform.

The Public Address is based on a common call or voice paging loudspeaker system, with a number of microphone inputs connected to the amplifier panels located on the Quarters Platform.

All microphone inputs will broadcast over the public address system however ranking of the inputs is provided to prevent more than one entry.

Alarm signals are broadcast over the whole of the Public Address System on all speakers and on all platforms simultaneously.

The alarm signals are as follows:

(a) Muster Alarm - consisting of a continuous signal

(b) Fire Alarm - consisting of an intermittent signal of one second duration with a one second interval in between

The above signals are at 400 Hz and are square fronted signals.

(c) Abandon Alarm - this is given by a verbal command over the P.A. system after the Muster Alarm.

The Fire Alarm is initiated automatically by either the fire or gas detection systems on any platform. Manual operation is also available on the Quarters Platform Control Desk and by fire alarm buttons.

REFERENCE
10 FEB 1978
DATE

HS-MSD-1
PUSH BUTTON No1 (IN CONTROL ROOM ON QP)
FIELD SHUTDOWN ELECTRICAL SHUTDOWN NO DE COMPRESSION

HS-13
TP1 PUSH BUTTON (INTERFACE ROOM)
SHUT DOWN TP1 WITH DE COMPRESSION

SHUT DOWN DP1

HS-12
PUSH BUTTON No2 (IN CONTROL ROOM ON QP)
SHUTDOWN DP1 & TP1 WITH DECOMPRESSION

No.4
PUSH BUTTON No. (IN CONTROL ROOM ON QP)

1st LEVEL
2nd LEVEL
3rd LEVEL

TP-1 GAS DETECTION AROUND GLYCOL REGEN FIREWALL
COINCIDENCE OPERATION

OPEN DELUGE VALVE XV-P6-20 MANUAL FUNCTION

TP-1 GAS DETECTION PROCESS 60% LEL
COINCIDENCE OPERATION

OPEN DELUGE VALVES IN ZONE OF FIRE DET

TP1 FIRE DETECTION PROCESS AREAS

MANUAL OPERATION OF DELUGE VALVES

HS-LSD-1 HS-ESD-3 HS-LSD-5 HS-ESD-2 HS-ESD-4 HS-ESD-6
PUSH BUTTON IN INTERFACE ROOM | PUSH BUTTON BYP P. BRIDGE I/FRONT | PUSH BUTTON IN MCC ROOM | PUSH BUTTON BY OPEN LAUNCH | PUSH BUTTON BY TCP-2 BRIDGE | PUSH BUTTON IN QP CONTROL ROOM
TP1 PLATFORM ESD NO DECOMPRESSION

FIRE PUMPS START QP. TCP 2 & TP1 (P1)(C1A1B)-(P2A&B)

HS-3 HS 2 — QP CONTROL ROOM | TP1 INTERFACE ROOM — PUSH BUTTON STOP STREAM 'A'
PXL V1A 2 | PSL V2A 22A | PSH V2A 5

HS-6 HS 5 — QP CONTROL ROOM | TP1 INTERFACE ROOM — PUSH BUTTON STOP STREAM 'B'
PXL V1B 2 | PSL V2B 22A | PSH V2B 5

HS-9 HS 8 — QP CONTROL ROOM | TP1 INTERFACE ROOM — PUSH BUTTON STOP STREAM 'C'
PXL V1C 2 | PSL V2C 22A | PSH V2C 5

To TCP 2 GROUP 'V' BRIDGE LINE SHUTDOWN CB-V2B87, CTCP2-1, CM1-2

HS-M3-4D HS-M3-4E — TOP CONTROL ROOM | FIELD MOUNTED — STOP PIG LAUNCH

FROM TCP 2 SEE NOTE 7

LOW LEVEL
5th LEVEL

CONTROL FUNCTION 'HIGH'
MC CM3-1 | MC V2A1 | LSLL V2A 5 | LSHH V1A 3
MC M3-1 | MC CM3-1 | LSLL V1A-7 | LSHH V1A 8
SEE NOTE 4 AND

CONTROL FUNCTION 'HIGH'
MC CM3-1 | MC V2B1 | LSLL V2B-5 | LSHH V1B 3
MC M3-1 | MC CM3-1 | LSLL V1B-7 | LSHH V1B 8
SEE NOTE 4 AND

CONTROL FUNCTION 'HIGH'
MC V2C-1 | MC CM3-1 | LSLL V1C-7 | LSLL V2C 5 | LSHH V1C 3
MC M3-1 | MC CM3-1
SEE NOTE 4 AND LSHH V1C 8

PXL M1-1 | PXL M2-1 | DXH M3-2 | DXH M3-2
AND
SEE NOTE 9
5th LEVEL

PXH M8-3 | PXL M1P3 | DXH M1-3 | PXH M2P3 | DXH M4-1 | DXL M4-2 | DXH M5-1 | DXL M5-2

ESDV V1A-1 — SHUTDOWN E2A&POE&F
ESDV V2A4 — GLYCOL REGENERATION UNIT 'A' SHUT DOWN
ESDV V2A1 — SEPARATOR 'A' GAS INLET
ESDV V1A4 — CAS FROM STREAM 'A' TO SALES GAS HEADER
ESDV V1A2 — HP CAS TO CONTACTOR 'A'
ESDV V1A3 — SEPARATOR 'A' OUTPUT
ESDV V2A2 — HYDROCARBON DUMP SEPARATOR 'A'
RICH GLYCOL FROM CONTACTOR 'A'
GROUP 'A' (SEE NOTE 10)

ESDV V1B1 — SHUTDOWN E2B&POE&F
ESDV V2B4 — GLYCOL REGENERATION UNIT 'B' SHUTDOWN
ESDV V2B1 — SEPARATOR 'B' GAS INLET
ESDV V1B4 — CAS FROM STREAM 'B' TO SALES GAS HEADER
ESDV V1B2 — HP CAS TO CONTACTOR 'B'
ESDV V1B3 — SEPARATOR 'B' OUTPUT
ESDV V2B2 — HYDROCARBON DUMP SEPARATOR 'B'
HYDROCARBON DUMP SEPARATOR 'B'
RICH GLYCOL FROM CONTACTOR 'B'
GROUP 'B' (SEE NOTE 10)

ESDV V1C1 — SHUTDOWN E2C&POE&F
ESDV V2C4 — GLYCOL REGENERATION UNIT 'C' SHUTDOWN
ESDV V2C1 — SEPARATOR 'C' GAS INLET
ESDV V1C4 — CAS FROM STREAM 'C' TO SALES GAS HEADER
ESDV V1C2 — HP CAS TO CONTACTOR 'C'
ESDV V1C3 — SEPARATOR 'C' OUTPUT
ESDV V2C2 — HYDROCARBON DUMP SEPARATOR 'C'
HYDROCARBON DUMP SEPARATOR 'C'
RICH GLYCOL FROM CONTACTOR 'C'
GROUP 'C' (SEE NOTE 10)

ESDV M10A-1 (SEE NOTE 8) — TELEMETERED SIGNAL SHUTDOWN DP-1 GAS CONNECTION
ESDV M9-2 — TEMPORARY GAS CONNECTION FROM DP-1 FOR START-UP
ESDV M4-1 — CONDENSATE FROM DP1
ESDV M2-1 — INPUT SEALINE 'A'
ESDV M3-1 — INPUT SEALINE 'B'
ESDV M6-1 — GAS TO SCOTLAND PIPE No1
ESDV M5-1 — DRY GAS FROM TOM1
ESDV M5-2 — DRY GAS FROM TOM2
STOP M3 PIG LAUNCH SEQUENTIAL UNIT
SHUTDOWN PUMPS P1A/B&P2A/B
GROUP 'D' (SEE NOTE 10)

MATCHLINE FOR CONTINUATION SEE ELN 2110-755 PAGE 2

NOTES

1. FOR CONTINUATION OF LOGIC SYSTEM SEE DRG No ELN 2110-755 PAGES 2&3
2. THESE DRAWINGS TO BE READ IN CONJUNCTION WITH SHUTDOWN LOGIC FOR TCP-2 DRG No ELN2169-SHT No C7001,2&3
3. THERE ARE 5 LEVELS OF SHUT DOWN 1ST, 2ND & 3RD ARE SAFETY LEVELS, 4TH & 5TH ARE PROCESS SHUT DOWN LEVELS
4. FOR LIST OF NON-ESSENTIAL SUPPLIES SEE ELECTRICAL LOAD DATA SHEETS.
5. PUSH BUTTONS OR INSTRUMENTS SHOWN WITH DOUBLE LINES ARE LOCATED ON TCP-2 OR QP
6. MC-CM3-1 OR MC-CM3-1 TO BE MANUALLY SWITCHED IN WHEN CAS IS FLOWING FROM TP1 TO TCP-2
7. IF TP-1 CONDENSATE IS BEING INJECTED INTO TCP-2 PIPELINE TO SCOTLAND THEN A CONTROL SIGNAL MUST BE MANUALLY CONNECTED, SO THAT IF VALVE ESDV-CM3-1 (CAS TO SCOTLAND) CLOSES PUMPS P1A/B, P2A/B ARE STOPPED.
8. AFTER START UP ESDV M10A-1 WILL BE ISOLATED FROM THE ESD SYSTEM AND LOCKED OPEN
9. HIGH OR LOW PRESSURE AT INTERMEDIATE PLATFORM IS TELEMETERED TO TP1 TO CLOSE ESDV-M3-1, STOP M3PG LAUNCH & PUMPS P1A/B, P2A/B

LEGEND

- EMERGENCY SHUTDOWN VALVE (VALVE CLOSED)
- EMERGENCY SHUTDOWN VALVE (VALVE OPEN)
- MANUAL INITIATION
- SELECTOR SWITCH (LOCKABLE TYPE) LOCATED ON MAIN CONTROL PANEL.
- PUSHBUTTON

REFERENCE DRGS.

SHUTDOWN LOGIC DIAGRAMS TCP 2 ELN 2169 C7001, 2&3

ELECTRICAL LOAD DATASHTS TCP-2 HOLD FOR SITE INF:

NOTE 10.
EACH STREAM/GROUP SHUTDOWN HAS AN ASSOCIATED "AUTHORISE" PUSH BUTTON ON QP. WHICH MUST BE OPERATED TO ALLOW RE-OPENING OF A VALVE AFTER SHUTDOWN.

AS BUILT
TO INFORMATION RECEIVED UP TO AUG 1977

ELF-NORGE
FRIGG FIELD

TREATMENT PLATFORM No1
NORTH SEA JOB 1-40-C2 W.D.104 M

McDERMOTT — HUDSON
LONDON — ENGLAND

DRAWN BY E.Hry.	SCALE —	DATE 6.5.75	DWG NO ELN 2110
DESIGNED BY		PAGE NO 1 OF 3.	SHEET NO 755

SHUTDOWN LOGIC DIAGRAM (PROCESS)

FAB. STDS. REQ'D THIS SHT	DESIGN	ELEC	INSTR	PIPING	PROCESS	NO	BY	DATE	REVISIONS	DATE	APP
		MH	BO			6	GP	19.9.77	Highest in use (Mark System Number)	19.9.77	BAT
						4	EMP	2-4-76	Selector SW for streams A & B deleted Push Buttons for TCP 2 & DP-2 Shutdown Removed for clarity, Approval to Electrical Shutdown Deleted, Pig Launch Shutdown System Revised, Push button numbers added.	11/4/76	MW
		MB	MH								

DESIGN	ELEC	INSTR	PIPING	PROCESS	NO	BY	DATE	REVISIONS	DATE	APP
	MB	MH			3	EW	27-1-76	CONFIGURATION CHANGED & SELECT FUNCTION ADDED TO SELECTOR	3/2/76	JONES
	MB	MH			2	GD	6-10-76	PUSH BUTTON ADDED	3-10-76	JJ
	MH	MH			7	IMA	23/3/77	Issued As Built	7-10-77	BAT
RHZ	MB	MH			5	GP	31-1-77	REVISED WHERE NOTED	10-2-77	WEP

gwl 05.08.78

MATCH LINE: FOR CONTINUATION SEE DRG. ELN 2110-755 PAGE 1.

1ST LEVEL
2ND LEVEL
3RD LEVEL
4TH LEVEL
5TH LEVEL
6TH LEVEL

FROM TCP-2 SHUTDOWN LEVELS 1, 2 & 3

10 SECS. TO 10 MIN. DELAY
ADJUSTABLE TO ALLOW HYDRAULIC SHUT-ON ESD VALVES TO CLOSE BEFORE DECOMPRESSION

PT V3-7
AND
SEE NOTE 2

PY V2C-6 (H)

FROM TCP-2 2ND LEVEL SHUTDOWN.

ESDV B-7 — CONDENSATE TO/FROM TCP2 (LP)
ESDV B-1 — WET GAS TO COMPRESSOR
ESDV B2 — WET GAS FROM COMPRESSOR
ESDV B-3 — CONDENSATE TO/FROM TCP-2
ESDV TCP2-1 — DRY GAS TO/FROM TCP-2 (HP)
ESDV M1-2 — WET GAS TO/FROM TCP-2

GROUP 'V'

ESDV V3-6 — COMPRESSOR SUCTION TRAIN MAIN PRESSURE RELIEF.

GROUP 'W'

ESDV V1A-5 — GAS FROM SEPARATOR 'A' TO COMPRESSOR, PRESSURE RELIEF.
ESDV V1A-4 — SEPARATOR 'A' - PRESSURE RELIEF.
ESDV V1B-5 — GAS FROM SEPARATOR 'B' TO COMPRESSOR, PRESSURE RELIEF.
ESDV V1E-4 — SEPARATOR 'B' - PRESSURE RELIEF.
ESDV V1G-5 — GAS FROM SEPARATOR 'C' TO COMPRESSOR, PRESSURE RELIEF.
ESDV V1G-6 — SEPARATOR 'C' - PRESSURE RELIEF.
ESDV V1C-7 — SEPARATOR INLET HEADER - PRESSURE RELIEF.
ESDV V2A-3 — CONTACTOR 'A' - PRESSURE RELIEF.
ESDV V2D-8 — H.P. GAS TO CONTACTOR 'A' - PRESSURE RELIEF.
ESDV V2B-3 — CONTACTOR 'B' - PRESSURE RELIEF.
ESDV V2E-8 — H.P. GAS TO CONTACTOR 'B' - PRESSURE RELIEF.
ESDV V2G-3 — CONTACTOR 'C' - PRESSURE RELIEF.
ESDV V2C-7 — SALES GAS HEADER - PRESSURE RELIEF.
ESDV V2F-8 — H.P. GAS TO CONTACTOR 'C' - PRESSURE RELIEF.
ESDV V2C-5 — SALES GAS HEADER No2 - PRESSURE RELIEF.
ESDV M1-3 — WET GAS TO/FROM TCP-2 - PRESSURE RELIEF.
ESDV M2-1 — SEPARATOR INLET HEADER - PRESSURE RELIEF.

GROUP 'X'

ESDV CB-2
ESDV CB-1
ESDV CB-4
ESDV CB-3

SEE ELN 2169-C7002

MATCH-LINE FOR CONTINUATION SEE DRG ELN 2110-755 PAGE 3

NOTES

1. FOR GENERAL NOTES AND LEGEND SEE DRG. No ELN 2110-755 PAGE 1
2. V3 WILL ONLY PRESSURE RELIEVE ON A 2ND LEVEL BLOWDOWN SIGNAL PROVIDED THERE IS A SIGNAL FROM PT CV3-7.

AS BUILT
TO INFORMATION RECEIVED UP TO AUG 1977

REFERENCE
DATE 10 FEB 1978

DESIGN	ELEC	INSTR	PIPING	PROCESS	NO	BY	DATE	REVISIONS	DATE	APP
		JW			5	I.H.R	23/8/77	ISSUED AS BUILT	13.10.77	RAP
		MH			4	RAP	4-X	MATCHLINE ADDED, TITLE REVISED	11/8/76	RAP
					3	AW	26-1-76	PRESSURISE SYSTEM REVISED AND ELEC. FUNCTIONS TRANSFERRED TO NEW SHT	2/2/76	DAVL
					2	GF	2-10-75	NOTE 2 ADDED	13.10.75	IJI
					1	CD	22-7-75	APPROVED FOR CONSTRUCTION	8.8.75	IJI
					0	CD	7-5-75	ISSUED FOR CLIENT APPROVAL		

FAB. STDS. REQ'D. THIS SHT

05.09.75

APPROVED Tony Denson, Mc DERMOTT-HUDSON, DATE Aug 5, 1975			
ENGINEERS APPROVAL			
JAS & AUG 75	BY	DATE	
PROJECT	JAS	5-8-75	
STRUCTURAL	—	—	
PIPING	TMO	5.8.75	
MECHANICAL	MH-W	7.8.75	
ELECTRICAL	A.H.G	8/8/75	
INSTRUMENT	MH	8.8.75	
P&B CHECK	KHZ	22.8.75	
PROJ. CHECK			

ELF - NORGE
FRIGG FIELD

TREATMENT PLATFORM No1
NORTH SEA — JOB 1-40-C2 — W.D 104 fm

McDERMOTT — HUDSON
LONDON — ENGLAND

DRAWN BY	SCALE	DATE	DWG NO
C DALY	NONE	2nd MAY 75	ELN 2110
DESIGNED BY		PAGE 2 OF 3 PAGES	SHEET NO 755

SHUTDOWN LOGIC DIAGRAM (PROCESS) TP1

FOR CONTINUATION SEE DRG. ELN 2110 - 755 PAGE 2.

1ST LEVEL

2ND LEVEL

3RD LEVEL

4TH LEVEL

5TH LEVEL

GAS DETECTION IN VENT INLET 60% LEVEL

ISOLATE 6·6KV. RING ACB's

GAS DETECTION IN COMMON VENT INLET 60% LEL

CLOSE MAIN A/C INLET DAMPER

BATTERY ROOM

TRANSFORMER ROOM

INSTR INTERFACE ROOM 1.

VOID ABOVE INTERFACE ROOM N° 2

INSTR INTERFACE ROOM 2

MCC ROOM

CABLING AREA

AIR COND ROOM

SWITCH GEAR ROOM

GENERATOR ROOM

S/D GENERATOR TURBINE HOOD VENT FANS & DAMPERS

T1 T2 T3 SHUTDOWN TURBINES ON LOSS OF AIRFLOW

T1 T2 T3 START STANDBY EXTRACT FANS

FIRE DETECTION IN ROOM

S/D FANS CLOSE AIR/CON[3] DAMPERS

FIRE DETECTION

HALON RELEASE

SEE NOTE 1

TIME DELAY

RELEASE HALON

CLOSE AIR/CON[3] DAMPERS IN GENERATOR RM

CLOSE FIRE DAMPERS IN BATTERY RM

CLOSE FIRE DAMPERS IN CEILING

S/D COMMON AIR-CONDITIONING FANS CLOSE DAMPERS

CLOSE INTERFACE ROOM N° 1 FIRE DAMPERS

FIRE DETECTION UNDER TURBINE HOOD

CLOSE FIRE DAMPERS

GAS AT 60% LEL UNDER TURBINE HOOD

GAS AT 15% LEL IN TURBINE INLET

ANY 1 OUT OF 3 CAUSES SHUTDOWN OF ALL THREE TURBINES

ENERG STOP

CONTROLLED SHUTDOWN TURBINE T1

CONTROLLED SHUTDOWN TURBINE T2

CONTROLLED SHUTDOWN TURBINE T3

EMERGENCY STOP TURBINE T1

EMERGENCY STOP TURBINE T2

EMERGENCY STOP TURBINE T3

(SEE NOTE 3)

GAS DETECTION INSIDE BUILDING

FIRE DETECTION INSIDE BUILDING

SHUTDOWN FANS AND CLOSE DAMPERS IN FIRE PUMP HOUSE No 1 (PUMP GA) LOCATED IN PROCESS AREA

SHUTDOWN FANS AND CLOSE DAMPERS IN FIRE PUMP HOUSE No 2 (PUMP GB) LOCATED IN PROCESS AREA

SHUTDOWN FANS AND CLOSE DAMPERS IN WORKSHOP & STORES (LOCATED IN PROCESS AREA)

PRESSURE LOSS

ISOLATE NON-ESSENTIAL ELECT. SUPPLIES IN FIRE PUMP HOUSE

ISOLATE NON-ESSENTIAL ELECT SUPPLIES IN FIRE PUMP HOUSE

ISOLATE NON-ESSENTIAL ELECT. SUPPLIES IN WORKSHOP & STORES

ISOLATE NON-ESSENTIAL ELECTRICAL SUPPLIES IN PROCESS AREA (SEE NOTE 2)

DIESEL GENERATOR START-UP OCCURS ONLY WHEN 380V POWER IS LOST IN BOTH TP1 & TCP2. REF DRG 2163-C6003

MATCHLINE FOR

REFERENCE

DATE 10 FEB 1978

FAB. STDS. REQ'D. THIS SHT

NOTES

1/ ALL HALON RELEASE SOLENOID VALVES HAVE A BUILT IN TIME DELAY TO ALLOW THE FANS TO STOP AND DAMPERS TO CLOSE IN ADDITION THE MCC SOLENOID VALVE HAS FURTHER DELAY TO ALLOW FOR PERSONNEL EVACUATION, SEE FIRE & GAS LAYOUTS FOR OTHER MANUAL RELEASES.

2/ ALL ELECTRICAL SUPPLIES IN PROCESS AREA TO BE ISOLATED EXCEPT THE FOLLOWING :-

a) ALARM SYSTEMS
b) PUBLIC ADDRESS SYSTEMS
c) LIGHTING & NAV AIDS
d) SHUTDOWN SYSTEM
e) TELEPHONE SYSTEM
f) GAS DETECTION SYSTEM
g) FIRE DETECTION SYSTEM
h) TELEMETRY.

3/ EMERGENCY STOP ACTIVATES THE 'SLAM-SHUT' VALVE ON FUEL SUPPLY TO TURBINES (VALVE & CONTROL BY TURBINE VENDOR)

4/ FOR GENERAL NOTES, LEGEND & ELF DRG. REFER TO DRG No ELN 2110-755 PAGE 1.

5/ INDICATES PUSH BUTTON OPERATED HALON RELEASE OR EMERGENCY STOP

6) FOR PRESSURISATION SYSTEMS SEE THE FOLLOWING :-

a) FIRE PUMPHOUSE - ELN-2110-6015
b) WORKSHOP & STORES - ELN-2110-6016
c) GENERATOR ROOM - ELN-2110-6017
d) AIR CONDITIONING - ELN-2110-6018
e) BATTERY & TRANSFORMER - ELN-2110-6019

7) MANUAL HALON RELEASE GIVES AIR CONDITIONING SHUTDOWN & CLOSING OF FIRE DAMPERS.

8) STANDBY EXTRACT FAN STARTS UNLESS GAS IS DETECTED IN STANDBY FAN INLET VENT.

AS BUILT
TO INFORMATION RECEIVED UP TO AUG 1977

DESIGN	ELEC.	INSTR.	PIPING	STRUCT.	NO.	BY	DATE	REVISIONS	DATE	APP.
					6	[illegible]	23/3/77	ISSUED AS BUILT	13/10/77	BAC
					5	GP	6.9.77	REVISED TO OFFSHORE COMMENTS	19/9/77	DBM
					4	E.I	15.11.76	DRG. ISSUED FOR OFFSHORE	8/11/77	BAC
					3	RAP	7.5.76	ISSUED FOR APPROVAL / CONSTRUCTION	7/6/76	JWC
					2	RAP	2.4.76	ISSUED FOR CONSTRUCTION		
					1	MC	18 MAR 76	ISSUED FOR APPROVAL		
					0	RA.	[illegible] 76	ISSUED FOR PINK.		

FRAME 19-11-76

ENGINEERS APPROVAL

	BY	DATE
PROJECT	JWC	7/6/76
STRUCTURAL		
PROCESS		
MECHANICAL		
ELECTRICAL	[illegible]	7/6/76
INSTRUMENT	[illegible]	7/6/76
PIPE STRESS	EHE	7/6/76
FINAL CHECK		

ELF-NORGE
FRIGG FIELD

TREATMENT PLATFORM N°1
NORTH SEA JOB 1-40-C2 W.D. 104 M

McDERMOTT - HUDSON
[illegible]

DRAWN BY	SIZE	DWG NO	REV
JACK LOI	NONE	ELN 2110	
DESIGNED BY	DATE	SHEET	
	3RD FEB 76	755	

SHUTDOWN LOGIC DIAGRAM (ELECTRICAL)

The P.A. system is normally fed from a maintained 220 volt essential supply with a 24 hour diesel generator back-up. On loss of the 220 volt supply, the P.A. system is fed from a battery/ invertor supply. The battery has the capacity to maintain the P.A. system at full power output for a further half hour.

4.1.2.5 Telephone System

An internal telephone system is used for communication between the various platforms. In this system there are 58 telephones on the Quarters Platform, 15 telephones on Treatment Platform No. 1, 14 telephones on TCP2, and 17 telephones on Drilling Platform No. 1, and 17 telephones on Drilling Platform No. 2.

These telephones are mainly for direct communication between platforms. However, it is also possible to call to Norway on these telephones.

4.1.3 Principles of Process Design

The main functions of production platform TP1 are to:

(a) Dehydrate the natural gas supplied from Drilling Platform No. 1 (CDP1) and send it to Scotland via a sub-sea line.

(b) Dehydrate the condensate from CDP1 and send it to Scotland.

(c) Provide a gathering station for Frigg Field gas and two possible future Total Oil Marine gas fields.

(d) Provide space for future Total Oil Marine compression facilities.

(e) Act as the principal supplier of electrical power for TP1, QP and CDP1 via interconnecting cables. This system is further interlinked on a ring main principle to TCP2 and DP2.

(f) Provide facilities to make and send mud to kill as wells in the Frigg Field on CDP1 and DP2.

4.1.3.1 Process Description

Wet gas from Drilling Platform No. 1 enters Treatment Platform No. 1 through pig receivers M1 and/or M2 into a 26" manifold. From this manifold, gas can be directed to any of the FWKO Separators, V1A, V1B or V1C where gas and free liquid are separated. These separators, together with three glycol contactors, from three parallel streams through which the gas is processed. Two of these streams are for normal use with the third serving as a spare. Each separator and contactor is rated for 15 x 106 SCMD (529.65×10^6 SCFD).

Gas from each FWKO separator exits the vessel into separate 20" lines which later swage down to 18" and flow directly to the corresponding Glycol Contactor, V2A, V2B or V2C. Also off each 20" line, there is a provision for a future 20" gas line to Gas Compressors on Treatment/ Compression Platform No. 2. Likewise there is a return 18" line for each stream into the inlet lines to V2A, B C. It is not anticipated to use the TCP2 compressors until the operating pressure is V2A, B C falls below 150 Bars.

Any liquid recovered in the FWKO Separator is released into a single 12" hydrocarbon dump header which goes to the Condensate Surge Tank V3.

The gas passes through the Glycol Contactors which treat the gas so that the existing stream has a water dew point of no greater than -5°C at 150 bars (21°F at 2175 PSIA). Treithylene glycol, which is used to treat the gas, flows from each contactor back to separate glycol regeneration system (Q1, A B C), where it is regenerated for further use. Gas exits the Glycol Contactors in separate 18" lines which are individually metered. After the gas is metered, it flows through a set of pressure reset flow control valves arranged in parallel which control the pressure through each stream. The gas from each stream then flows into a common 32" sales gas header which passes through pig launcher M3 and enters the pipeline to St. Fergus, Scotland.

Condensate Surge Tank, V3 receives any condensate produced from the FWKO Separators and also receives the condensate produced on Drilling Platform No. 1. From this tank, the condensate is pumped through Coalescer V4 to remove any water from the condensate and then back into the sales gas line leaving the platform. There is a BS and W monitor following the coalescer which will cause the condensate to be recycled back into the Condensate Surge Tank should the water content be too high. In the event of surges entering the Condensate Surge Tank, V3, a high level switch will open an outlet to the Condensate Storage, V33. From here the condensate can either be recycled back to the Condensate Surge Tank, burnt via Condensate Burners M17A and B, or sent to the Condensate Storage on TCP2.

Other facilities provided include:

(a) L.P. vent system with scrubber and inverted gas seal discharging into a 75 ft. high vent stack.

(b) H.P. relief system, complete with scrubber TCP2 H.P. relief system (with scrubber) connects into the TP1 relief system, whence a common line discharges to a flare stack located 1510 ft. away from TP1.

(c) Methanol Storage and pumps for injection into Scottish sales gas subsea line if hydrate formation becomes a problem.

(d) General utility systems - diesel, glycol, air drainage.

4.1.4 Principles of Mechanical Design

The basis of mechanical design was the information relating to vessels, pumps etc., initially obtained from the Process Flow Diagrams. Therefore, the following codes and regulations were used in the design of the equipment listed below:

Pumps	- API standard 610 'Centrifugal Pumps for General Refinery Services'
Pressure Vessels	- British Standard 1515
Pipework	- ANS 1 B31.3 petroleum refinery piping ANS 1 B31.8 gas transmission and distribution of piping system
Thermal Insulation	- British Standard code of practice CP3005: 1965
Fire Pumps	- N.F.P.A. 20 - installation of centrifugal pumps

All the equipment was designed in strict accordance with these standards and codes of practice together with the additional requirements of the relevant certifying authority.

Emphasis was placed on maximum reliability, ease of maintenance and compactness. All equipment was designed to be exposed to a severe salt water atmosphere, 100% humidity, air temperature of -15°C to 32°C and maximum wind speeds of 129 knots.

4.1.4.1 Fire Water System

The fire water pumps which are located on the cellar deck in Zone 07 and Zone 12 can be activated automatically or manually. The pump is automatically started by the fire detectors located throughout TP1 or by fire detectors located on platforms TCP2 and QP.

Manual start is initiated from the control room on QP and from any fire alarm button on QP, TP1 or TCP2. Besides these remote starting locations, manual start push buttons (one for electric start, and one for pneumatic) are located behind a break glass window for emergency use. Any button starts all fire water pumps on QP, TP1 and TCP2. A failsafe pneumatic system is tied into the activation system for fire water pump engine start. Pneumatic lines complete with volume bottles are linked between the Quarters Platform and the Treatment Platforms. Once a start signal has been initiated from any of the remote locations a sequence start is activated on the engine. An automatic electric start sequence of 6 attempts of 15 seconds duration will occur and if this fails to start the engine, an automatic sequence using nitrogen of 6 attempts of 15 seconds duration occurs. Should both sequences fail, an alarm and annunciator point will be activated in the control room. All fire water pumps feed into a common fire water ring main.

The fire water pumps are rated at 7570 l/min at 9.63 Bar Abs. (2000 U.S. G.P.M. at 125 Psig) at the pump head.

The fire water systems and washdown system (see section 4.1.4.2) are interconnected with a check valve such that the washdown system can operate on its own or as part of the fire water system. Fire monitors, fire hose reels, and washdown hose reels are positioned throughout the platform and a fire at any location can be fought by at least two of these fire-fighting positions.

4.1.4.2 Washdown System

For general washdown around the platform a washdown pump and hose reels have been provided. The washdown pump is rated at 1892 l/min at 9.63 Bars Abs. (500 U.S. G.P.M. at 125 Psig) at the pump head and driven by a 75 KW electric motor.

A start/stop button is located at each of the 19 hose reel stations for manual operation of the pump.

These hose reels are primarily for washdown but also will receive water from the fire water system in case of emergency (see section 4.1.4.1).

Interconnections between Platforms

Process Interconnections

4.2 Interconnections between Platforms

4.2.1 Process Interconnections (TP1)

The platforms on the Frigg Field are interlinked to provide a high degree of operational flexibility. TP1 is linked via subsea pipelines to DP1 and Scotland, & via bridges to TCP2 & QP. These links are as follows:

1) CDP1
   Wet Gas Supply Line
   Condensate Supply Line

2) Scotland
   Main Sales Line

3) TCP2 via Bridge
   Inlet Wet Gas Lines
   Outlet Dry Gas Headers
   Treated Condensate

4.2.2 Utilities Interconnections

TP1 utilities systems are connected via the bridges to TCP2 & QP.

These connections are:

1) TCP2
   Methanol, Diesel oil, Fuel Gas, Glycol, Air, Relief, Fresh & Firewater Systems.

2) QP
   Diesel Oil, Fuel Gas, Potable Water, Air & Firewater.

Electrical Interconnections

4.2.2 Electrical Interconnections

The TP1 - QP and TP1 - TCP2 bridges carry the following electrical supplies:

(a) 5.5 kV cables - the cables for the ring system - as described under section 4.1.1

(b) 380 volt cables - for the supply of the emergency life support systems on TP1 and TCP2 from the QP emergency generators.

(c) 380 volt cable - on TP1 - QP bridge only - supplying the power required to 'black start' the TP1 generators

(d) Nav. Aids Cabling - As described under section 4.1.1.5

Instrument Interconnections

4.2.3 Instrument Interconnection

The platform Q.P. control room is the central control point for the entire Frigg Field complex. The centre will provide control data processing for TP-1, TCP-2, CDP-1 and DP-2. All process data is recorded on the Telemecanique computer system for either transmittal to U.K. or Norway. The computer also provides process control functions to TP-1 and TCP-2.

The main control panel houses the mimic display for all process functions taking place on TP-1 and TCP-2, plus fire and gas detection displays and power generation displays. Data, alarm and control transmission is via the 'CETT' telemetry system.

Operating data forCDP-1 and DP-2 is also displayed and recorded on panels adjacent to the appropriate treatment platform mimic. The control desk is sited facing the main control panel and houses indicators displaying 32" sea line gas characteristics, well selector buttons, CRT graphic display computer addressed read outs.

The emergency shutdown pushbutton cabinet is located to the rear of the control desk and is telemetry linked to TP-1 - DP-1 - TCP-2 and DP-2 providing remote shutdown facilities to the complex.

C o m m u n i c a t i o n

4.2.4 Communication

An internal telephone system is used for communication between the various platforms. It is also possible to call to Norway on these telephones and a direct link via the tropospheric scatter system to the United Kingdom, tied into the U.K. public telephone exchange (Aberdeen).

The P.A. and Alarm Control Panel and Amplifier racks are located in the Q.P. Telex Room adjacent to the Control Room.

The P.A. Alarm System is manufactured by Brodene Steen - Hansen of Norway, model number PEGFA Mark 25,000A1, 2, 4/2500 - 3 x 26 - SV, the output of which is 2500 watts - 1500 watts for Q.P. and TP-1 platforms and 1000 watts for TCP-2 platform.

The public address is based on a common call or voice paging loudspeaker system. All microphone inputs will broadcast over the public address system, however, ranking of the inputs is provided to prevent more than one entry.

Alarm signals are broadcast over the whole of the public address system on all speakers simultaneously.

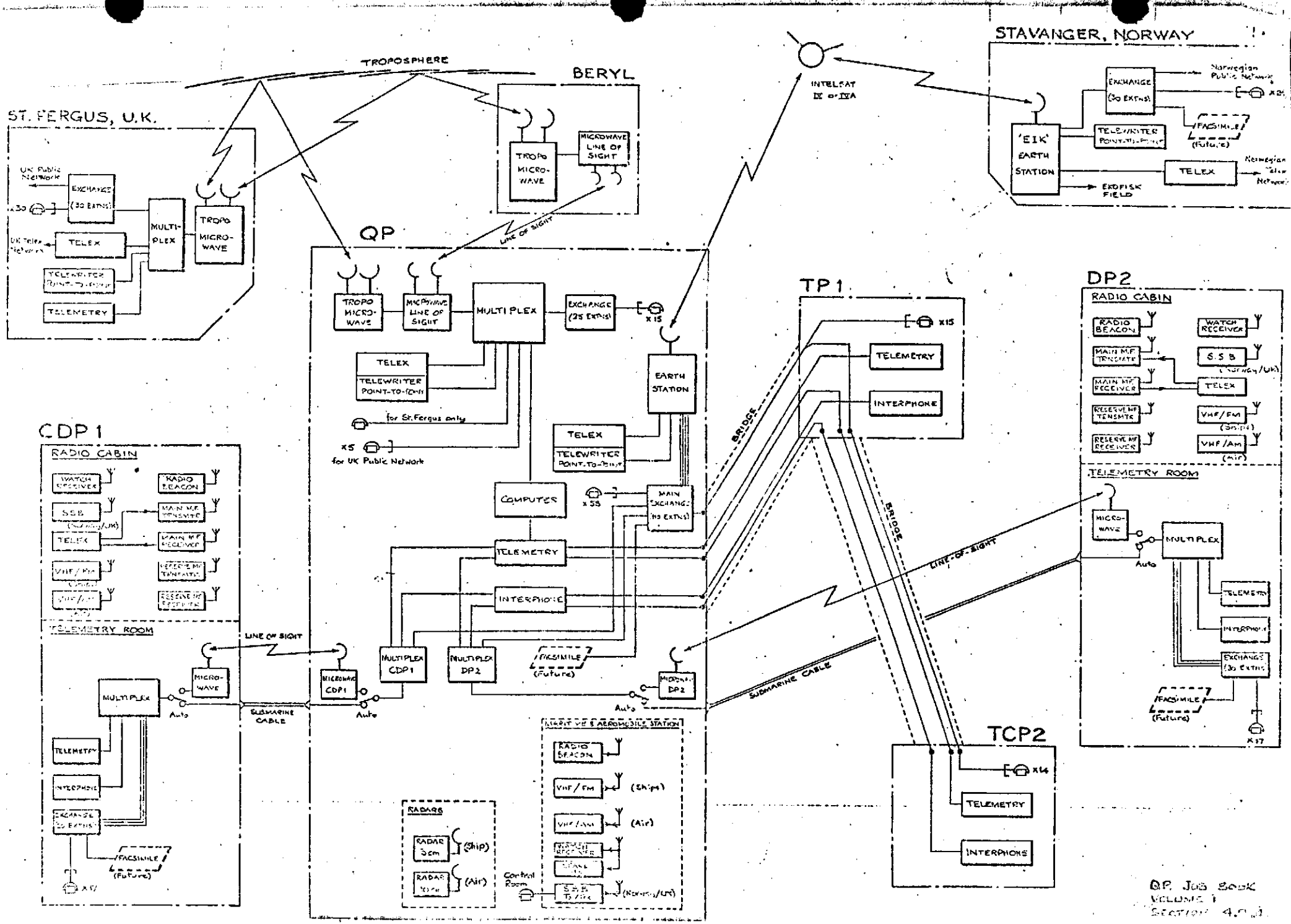
TROPOSPHERE
BERYL
TROPO MICRO-WAVE
MICROWAVE LINE OF SIGHT
ST. FERGUS, U.K.
UK Public Network
EXCHANGE (30 EXTNS)
x30
MULTI-PLEX
TROPO MICRO-WAVE
UK Telex Network
TELEX
TELEWRITER POINT-TO-POINT
TELEMETRY
LINE OF SIGHT
QP
TROPO MICRO-WAVE
MICROWAVE LINE OF SIGHT
MULTI PLEX
EXCHANGE (25 EXTNS)
x15
TELEX
TELEWRITER POINT-TO-POINT
for St. Fergus only
x5
for UK Public Network
EARTH STATION
COMPUTER
x55
MAIN EXCHANGE (90 EXTNS)
TELEMETRY
INTERPHONE
MULTIPLEX CDP1
MULTIPLEX DP2
FACSIMILE (Future)
MICROWAVE CDP1
MICROWAVE DP2
Auto
INTELSAT IV or IVA
STAVANGER, NORWAY
'EIK' EARTH STATION
EXCHANGE (30 EXTNS)
Norwegian Public Network
x25
TELE-WRITER POINT-TO-POINT
FACSIMILE (Future)
TELEX
Norwegian Telex Network
EKOFISK FIELD
TP1
x15
TELEMETRY
INTERPHONE
BRIDGE
CDP1
RADIO CABIN
WATCH RECEIVER
RADIO BEACON
S.S.B
MAIN M.F. TRANSMITR
MAIN M.F. RECEIVER
TELEX
RESERVE M.F. TRANSMITR
RESERVE M.F. RECEIVER
VHF/FM
VHF/AM
TELEMETRY ROOM
MULTIPLEX
MICRO-WAVE
Auto
TELEMETRY
INTERPHONE
EXCHANGE (30 EXTNS)
FACSIMILE (Future)
x17
LINE OF SIGHT
SUBMARINE CABLE
DP2
RADIO CABIN
RADIO BEACON
WATCH RECEIVER
MAIN M.F. TRANSMITR
S.S.B
MAIN M.F. RECEIVER
TELEX
RESERVE M.F. TRANSMITR
VHF/FM
RESERVE M.F. RECEIVER
VHF/AM
TELEMETRY ROOM
MICRO-WAVE
MULTIPLEX
Auto
TELEMETRY
INTERPHONE
EXCHANGE (30 EXTNS)
FACSIMILE (Future)
x17
LINE OF SIGHT
SUBMARINE CABLE
TCP2
x14
TELEMETRY
INTERPHONE
RADARS
RADAR 3cm
(Ship)
RADAR
(Air)
Control Room
RADIO BEACON
VHF/FM
(Ships)
VHF/AM
(Air)
S.S.B
(Norway/UK)

Main P & ID's

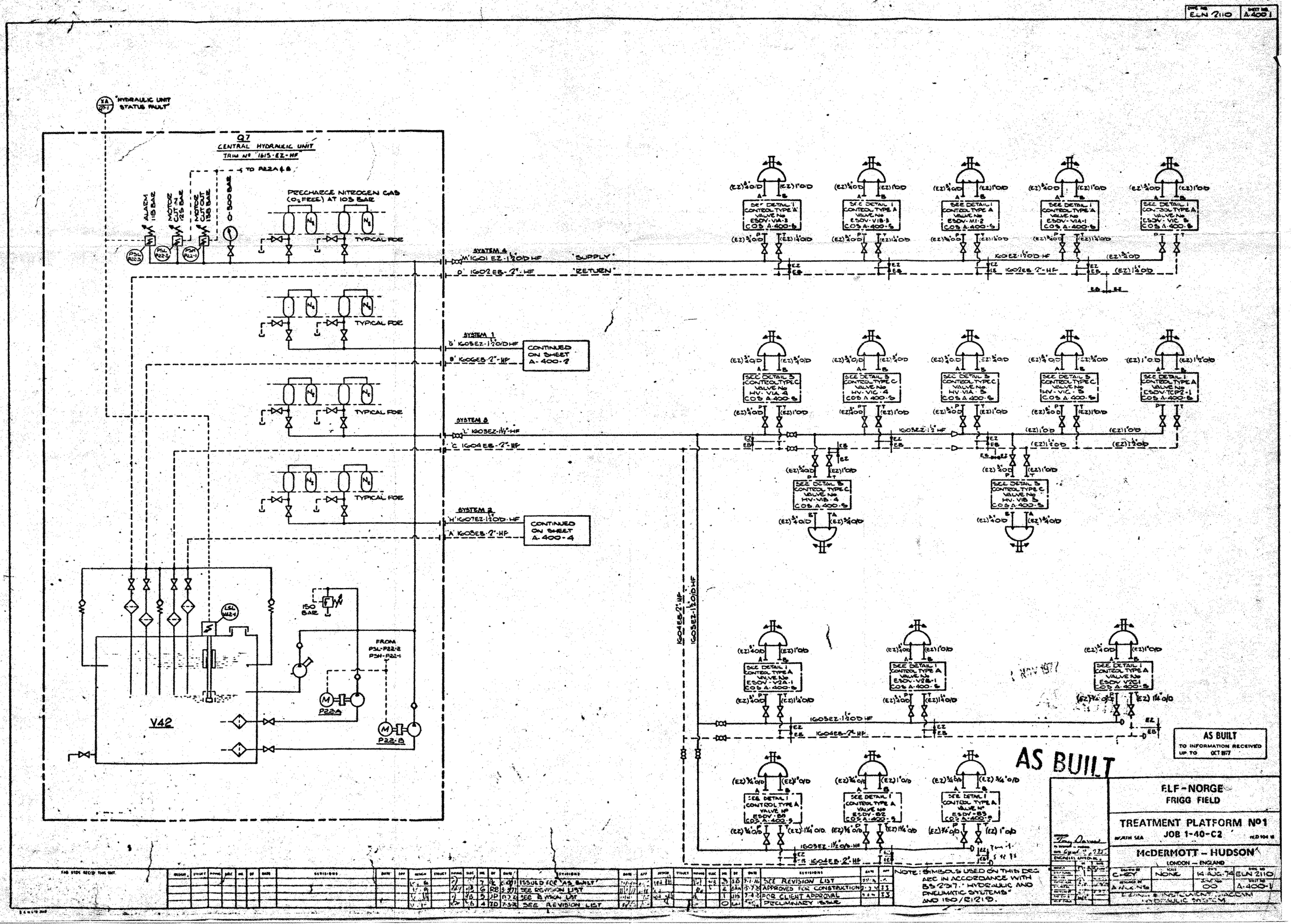

DWG NO ELN 2110
SHEET NO A-400-1
"HYDRAULIC UNIT STATUS FAULT"
Q7
CENTRAL HYDRAULIC UNIT
TRIM Nº 1615-EZ-HF
TO P22A & B
ALARM 118 BAR
MOTOR CUT IN 125 BAR
MOTOR CUT OUT 138 BAR
0-500 BAR
PRECHARGE NITROGEN GAS (O2 FREE) AT 105 BAR
TYPICAL FOR
SYSTEM 4
'M' 1601 EZ-1½"O/D HF
'D' 1602 EB-2"-HF
'SUPPLY'
'RETURN'
SYSTEM 1
'G' 1605EZ-1½"O/D HF
'B' 1606EB-2"-HF
CONTINUED ON SHEET A-400-2
SYSTEM 3
'L' 1603EZ-1½"-HF
'C' 1604EB-2"-HF
SYSTEM 2
'H' 1607EZ-1½"O/D-HF
'A' 1608EB-2"-HF
CONTINUED ON SHEET A-400-4
150 BAR
FROM PSL-P22-2 PSH-P22-1
P22A
P22-B
V42
SEE DETAIL 1 CONTROL TYPE 'A' VALVE No ESDV-VIA-3 COS A-400-5
SEE DETAIL 1 CONTROL TYPE A VALVE No ESDV-VIB-3 COS A-400-5
SEE DETAIL 1 CONTROL TYPE A VALVE No ESDV-MI-2 COS A-400-5
SEE DETAIL 1 CONTROL TYPE A VALVE No ESDV-VIA-1 COS A-400-5
SEE DETAIL 1 CONTROL TYPE A VALVE No ESDV-VIC-5 COS A-400-5
SEE DETAIL 3 CONTROL TYPE C VALVE No HV-VIA-4 COS A-400-5
SEE DETAIL 3 CONTROL TYPE C VALVE No HV-VIC-4 COS A-400-5
SEE DETAIL 3 CONTROL TYPE C VALVE No HV-VIA-5 COS A-400-5
SEE DETAIL 3 CONTROL TYPE C VALVE No HV-VIC-5 COS A-400-5
SEE DETAIL 1 CONTROL TYPE A VALVE No ESDV-TCP2-1 COS A-400-5
SEE DETAIL 3 CONTROL TYPE C VALVE No HV-VIB-4 COS A-400-5
SEE DETAIL 3 CONTROL TYPE C VALVE No HV-VIB-5 COS A-400-5
SEE DETAIL 1 CONTROL TYPE A VALVE No ESDV-V2A-1 COS A-400-5
SEE DETAIL 1 CONTROL TYPE A VALVE No ESDV-V2B-1 COS A-400-5
SEE DETAIL 1 CONTROL TYPE A VALVE No ESDV-V2C1 COS A-400-5
SEE DETAIL 1 CONTROL TYPE A VALVE No ESDV-B8 COS A-400-5
SEE DETAIL 1 CONTROL TYPE A VALVE No ESDV-B2 COS A-400-5
SEE DETAIL 1 CONTROL TYPE A VALVE No ESDV-B3 COS A-400-5
1603EZ-1½"O/D HF
1604EB-2"-HF
AS BUILT
AS BUILT
TO INFORMATION RECEIVED UP TO OCT 1977
ELF-NORGE
FRIGG FIELD
TREATMENT PLATFORM Nº1
JOB 1-40-C2
NORTH SEA
McDERMOTT - HUDSON
LONDON - ENGLAND
NOTE: SYMBOLS USED ON THIS DRG ARE IN ACCORDANCE WITH BS 2917 "HYDRAULIC AND PNEUMATIC SYSTEMS" AND ISO/R1219.
ISSUED FOR "AS BUILT"
SEE REVISION LIST
APPROVED FOR CONSTRUCTION
FOR CLIENT APPROVAL
PRELIMINARY ISSUE
C-HEY
NONE
14-AUG-74
ELN 2110
A-400-1
INSTRUMENT DIAGRAM
HYDRAULIC SYSTEM

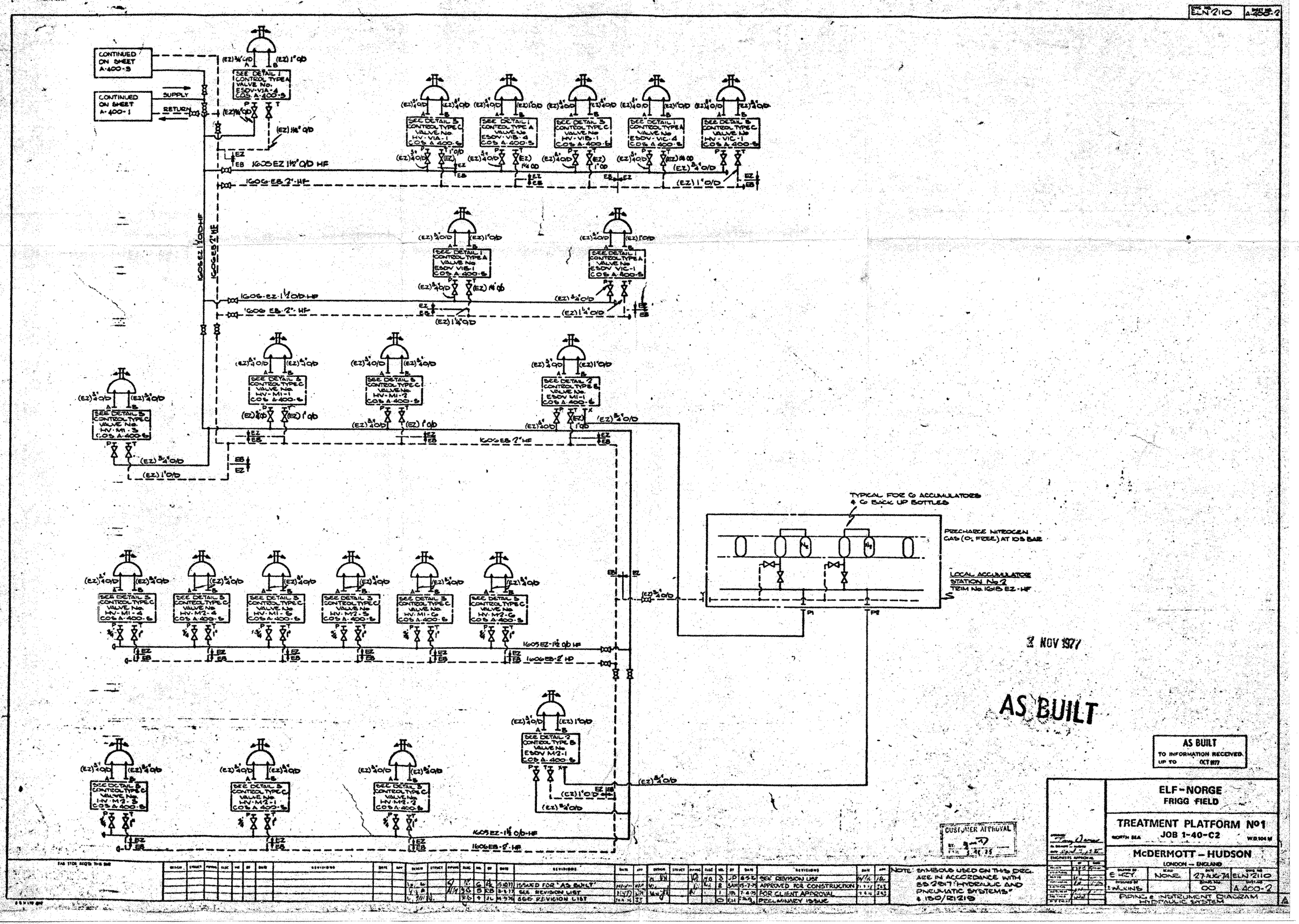

DWG NO. ELN 2110
SHEET NO. A-400-2
CONTINUED ON SHEET A-400-3
CONTINUED ON SHEET A-400-1
SUPPLY
RETURN
SEE DETAIL 1 CONTROL TYPE A VALVE No. ESDV-VIA-4 COS A-400-5
SEE DETAIL 3 CONTROL TYPE C VALVE No. HV-VIA-1 COS A-400-5
SEE DETAIL 1 CONTROL TYPE A VALVE No. ESDV-VIB-4 COS A-400-5
SEE DETAIL 3 CONTROL TYPE C VALVE No. HV-VIB-1 COS A-400-5
SEE DETAIL 1 CONTROL TYPE A VALVE No. ESDV-VIC-4 COS A-400-5
SEE DETAIL 3 CONTROL TYPE C VALVE No. HV-VIC-1 COS A-400-5
SEE DETAIL 1 CONTROL TYPE A VALVE No. ESDV VIB-1 COS A-400-5
SEE DETAIL 1 CONTROL TYPE A VALVE No. ESDV VIC-1 COS A-400-5
SEE DETAIL 3 CONTROL TYPE C VALVE No. HV-MI-1 COS A-400-5
SEE DETAIL 3 CONTROL TYPE C VALVE No. HV-MI-2 COS A-400-5
SEE DETAIL 2 CONTROL TYPE B VALVE No. ESDV MI-1 COS A-400-5
SEE DETAIL 3 CONTROL TYPE C VALVE No. HV-MI-3 COS A-400-5
SEE DETAIL 3 CONTROL TYPE C VALVE No. HV-MI-4 COS A-400-5
SEE DETAIL 3 CONTROL TYPE C VALVE No. HV-M2-4 COS A-400-5
SEE DETAIL 3 CONTROL TYPE C VALVE No. HV-MI-5 COS A-400-5
SEE DETAIL 3 CONTROL TYPE C VALVE No. HV-M2-5 COS A-400-5
SEE DETAIL 3 CONTROL TYPE C VALVE No. HV-MI-6 COS A-400-5
SEE DETAIL 3 CONTROL TYPE C VALVE No. HV-M2-6 COS A-400-5
SEE DETAIL 2 CONTROL TYPE B VALVE No. ESDV M2-1 COS A-400-5
SEE DETAIL 3 CONTROL TYPE C VALVE No. HV-M2-3 COS A-400-5
SEE DETAIL 3 CONTROL TYPE C VALVE No. HV-M2-1 COS A-400-5
SEE DETAIL 3 CONTROL TYPE C VALVE No. HV-M2-2 COS A-400-5
1605 EZ 1½" O/D HF
1606 EB 2" HF
TYPICAL FOR 6 ACCUMULATORS & 6 BACK UP BOTTLES
PRECHARGE NITROGEN GAS (O2 FREE) AT 103 BAR
LOCAL ACCUMULATOR STATION No 2 TRIM No. 1618 EZ-HF
2 NOV 1977
AS BUILT
AS BUILT TO INFORMATION RECEIVED UP TO OCT 1977
CUSTOMER APPROVAL
ELF-NORGE
FRIGG FIELD
TREATMENT PLATFORM No1
NORTH SEA
JOB 1-40-C2
W.D.104 M
McDERMOTT – HUDSON
LONDON – ENGLAND
E HEY
NONE
27 AUG 74
ELN 2110
WILKINS
00
A-400-2
PIPING & INSTRUMENT DIAGRAM HYDRAULIC SYSTEM
NOTE: SYMBOLS USED ON THIS DRG. ARE IN ACCORDANCE WITH BS 2917 "HYDRAULIC AND PNEUMATIC SYSTEMS" & ISO/R1219
ISSUED FOR "AS BUILT"
SEE REVISION LIST
SEE REVISION LIST
SEE REVISION LIST
APPROVED FOR CONSTRUCTION
FOR CLIENT APPROVAL
PRELIMINARY ISSUE

DWG NO. ELN 2110 | SHEET NO. A 400-5

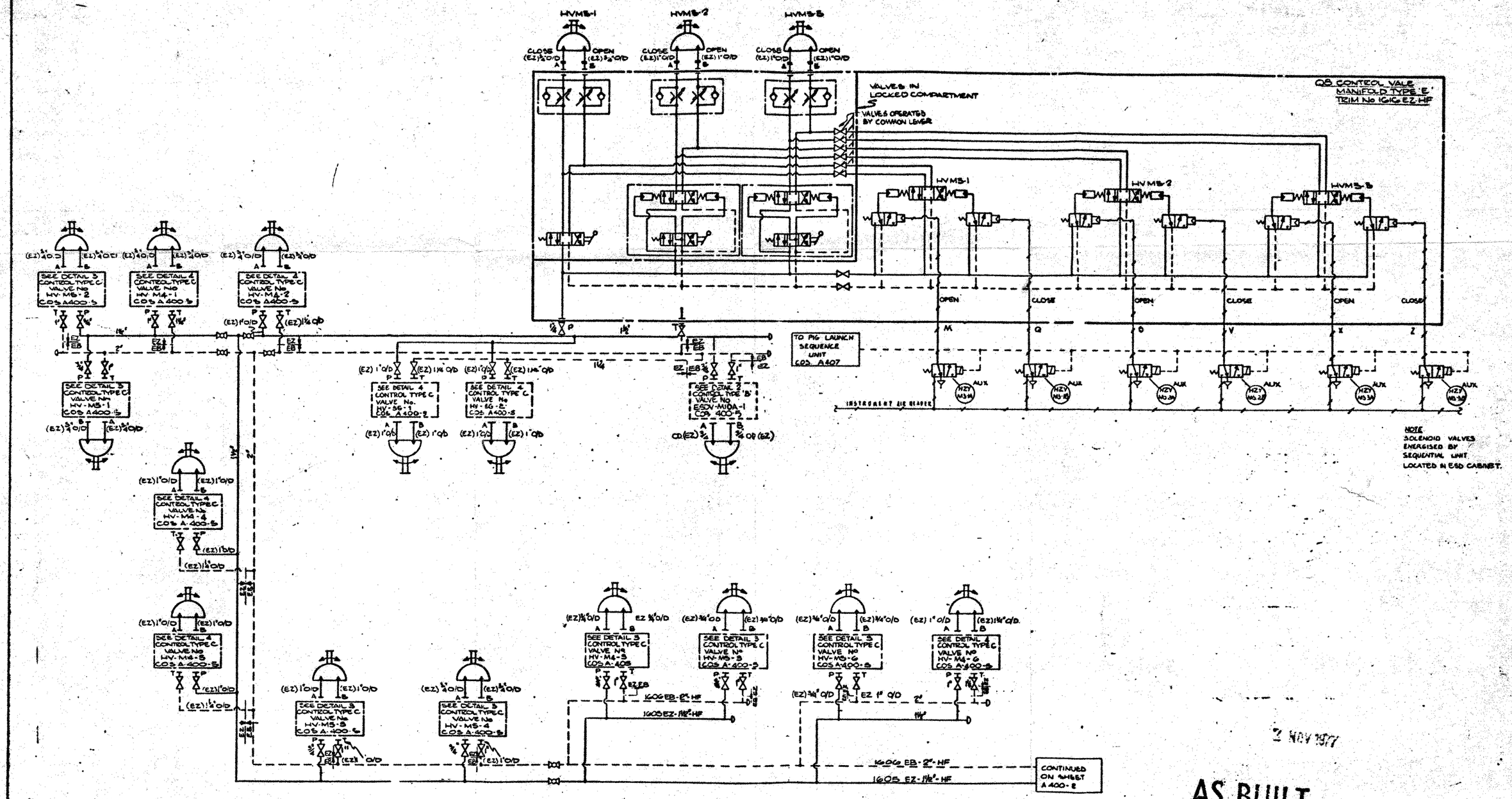

2 NOV 1977

AS BUILT

AS BUILT
TO INFORMATION RECEIVED UP TO OCT 1977

CUSTOMER APPROVAL
BY
DATE 12 75

ELF-NORGE
FRIGG FIELD

TREATMENT PLATFORM No1
NORTH SEA JOB 1-40-C2 WD 104 M

McDERMOTT - HUDSON
LONDON - ENGLAND

DRAWN BY	SCALE	DATE	DWG NO
E HEY	NONE	14 AUG 74	ELN 2110
DESIGNED BY E. WILKINS		ZONE NO 00	SHEET NO A 400-5

P.P.N.G. INSTRUMENT DIAGRAM HYDRAULIC SYSTEM

NOTE: SYMBOLS USED ON THIS DRG ARE IN ACCORDANCE WITH BS 2917: "HYDRAULIC AND PNEUMATIC SYSTEMS" AND ISO/R1219

REVISIONS	DATE	APP
SEE REVISION LISTS	5-8-77	
SEE REVISION LISTS	3-3-77	
SEE REVISION LISTS	8-9-76	
SEE REVISION LISTS	8-9-76	
SEE REVISION LIST	7-1-76	
APPROVED FOR CONSTRUCTION	15-7-75	
FOR CLIENT APPROVAL	7-4-75	
PRELIMINARY ISSUE		

REVISIONS	DATE	APP
SEE REVISION LIST		
APPROVED FOR CONSTRUCTION		
FOR CLIENT APPROVAL		
PRELIMINARY ISSUE		

REVISIONS	DATE	APP
ISSUED FOR 'AS BUILT'		

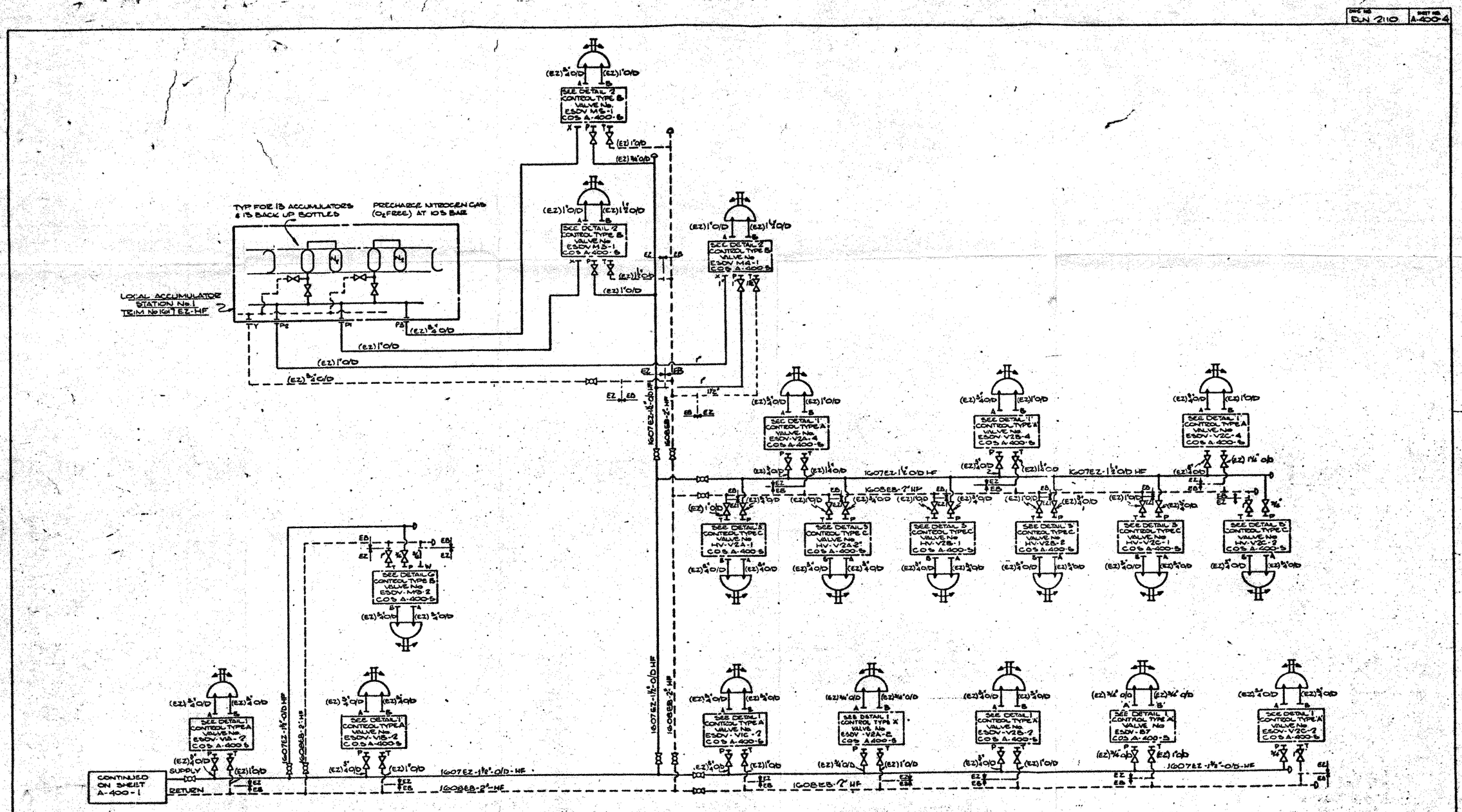

AS BUILT

2 NOV 1977

AS BUILT
TO INFORMATION RECEIVED UP TO OCT 1977

CUSTOMER APPROVAL

ELF-NORGE
FRIGG FIELD

TREATMENT PLATFORM No1
JOB 1-40-C2
NORTH SEA WD104M

McDERMOTT - HUDSON
LONDON — ENGLAND

DESIGNED BY	SCALE	DATE	DWG NO
J. HEY	NONE	14 AUG 74	ELN 2110
DESIGNED BY		SCALE NO	SHEET NO
A. WILKINS		00	A-400-4

PIPING & INSTRUMENT DIAGRAM
HYDRAULIC SYSTEM

NOTE: SYMBOLS USED ON THIS DRG ARE IN ACCORDANCE WITH BS 2917: "HYDRAULIC AND PNEUMATIC SYSTEMS." & ISO/R1219

REVISIONS	DATE	APP
3	10	7-1-76
2	5	7-1-76
1	10	7-4-76
0		

REVISIONS	DATE	APP
ISSUED FOR "AS BUILT"	6	10 77
SEE REVISION LIST	6	3-3-77
SEE REVISION LIST	5	8-9-76
SEE REVISION LIST	4	7-5-76

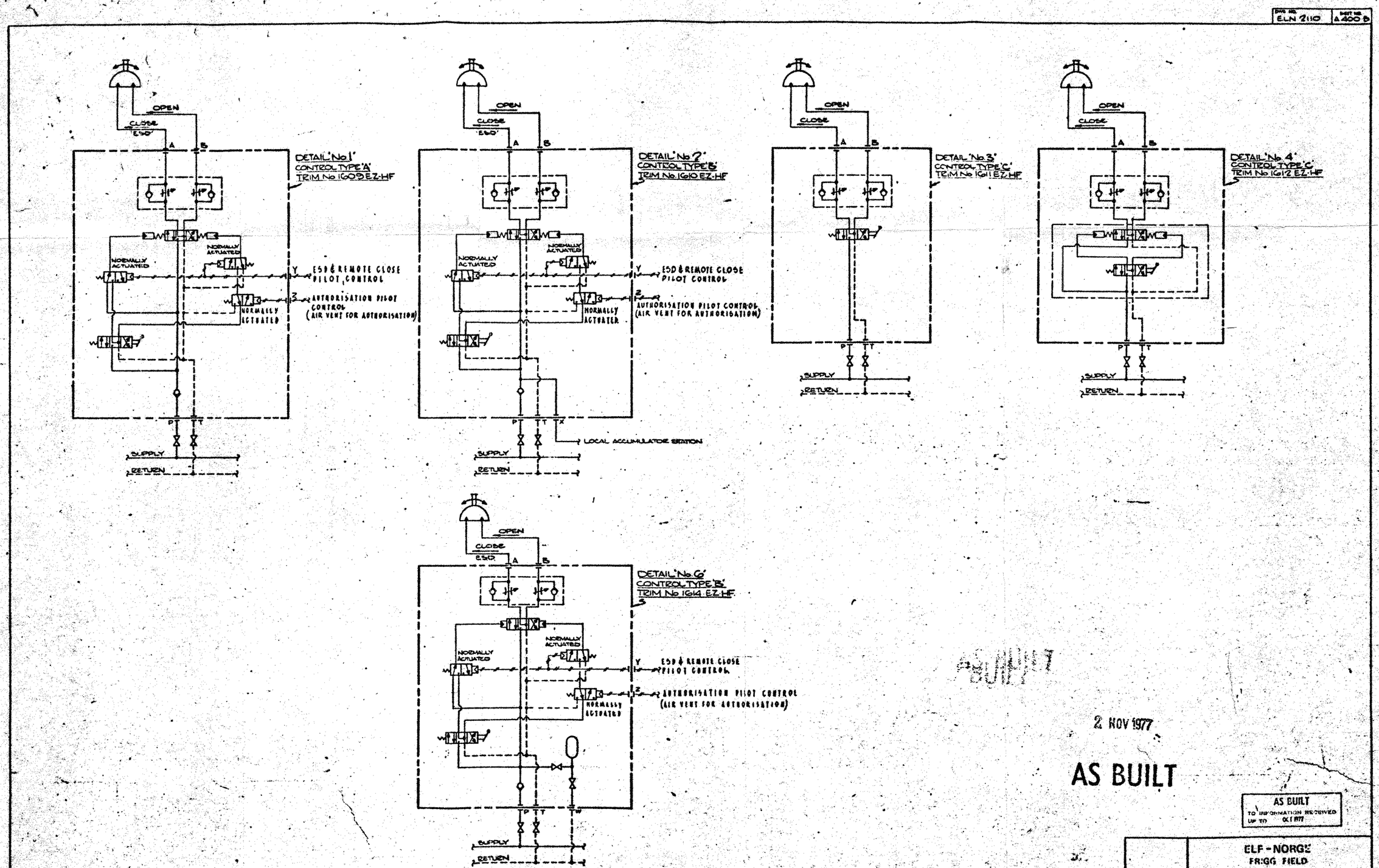

2 NOV 1977

AS BUILT

AS BUILT
TO INFORMATION RECEIVED UP TO OCT 1977

COSTOMER APPROVAL

ELF - NORGE
FRIGG FIELD

TREATMENT PLATFORM No 1
JOB. 1-40-C2

McDERMOTT – HUDSON
LONDON – ENGLAND

DRAWN BY	SCALE	DATE	DWG NO
E.HRY	NONE	14 AUG 74	ELN 2110
DESIGNED BY		DWG NO	SHEET NO
A. WILKINS		00	A 400 B

PIPING & INSTRUMENT DIAGRAM
HYDRAULIC SYSTEM

NOTE: SYMBOLS USED ON THIS DRG ARE IN ACCORDANCE WITH BS 2917 "HYDRAULIC AND PNEUMATIC SYSTEMS" & SO 2:219

REVISIONS	DATE	APP
SEE REVISION LIST		
APPROVED FOR CONSTRUCTION		
FOR CLIENT APPROVAL		
PRELIMINARY ISSUE		
ISSUED FOR 'AS BUILT'		
SEE REVISION LIST		

ELN 2110 | A403

IDENTIFICATION LETTERS FOR INSTRUMENTS

	FIRST LETTER	SECOND LETTER	THIRD LETTER	FOURTH LETTER
A	ANALYSIS	ALARM		
B	BURNER FLAME	*		
C	CONDUCTIVITY/ ELECTRICAL CONDUCTIVITY OR	CONTROL	CONTROL	
D	DENSITY OR SPECIFIC GRAVITY	DIFFERENTIAL		
E	VOLTAGE	PRIMARY ELEMENT	PRIMARY ELEMENT	
F	FLOW RATE	RATIO		
G		GAUGE GLASS		
H	HAND (MANUALLY)		HIGH	HIGH
I	CURRENT	INDICATE	INDICATE	
J	POWER	SCAN	SCAN	
K	TIME	TIME		
L	LEVEL	LIGHT (PILOT)	LOW	LOW
M	MOISTURE		MIDDLE	MIDDLE
N				
O		ORIFICE (RESTRICTION)		
P	PRESSURE OR VACUUM	POINT (TEST CONNECTION)		
Q	QUANTITY	INTEGRATOR	INTEGRATOR	
R	RADIOACTIVITY	RECORD OR PRINT	RECORD OR PRINT	
S	SPEED	SWITCH OR SAFETY	SWITCH	
T	TEMPERATURE	TRANSMITTER	TRANSMITTER	
U	MULTIVARIABLE	MULTIFUNCTION	MULTIFUNCTION	
V	VISCOSITY	VALVE	VALVE	
W	WEIGHT	WELL		
X	UNCLASSIFIED	UNCLASSIFIED	UNCLASSIFIED	UNCLASSIFIED
Y		RELAY OR COMPUTE	RELAY OR COMPUTE	
Z	POSITION	PUNTION		

* ALL PROCESS MEASUREMENTS INDICATED OR RECORDED ON THE MAIN BOARD ARE ALSO DATA LOGGED BY THE COMPUTER.

INSTRUMENT BALLOON SYMBOLS

- LOCAL MOUNTED INSTRUMENT FOR SINGLE VARIABLE
- LOCAL BOARD MOUNTED INSTRUMENT
- INSTRUMENT MOUNTED BEHIND BOARD
- INSTRUMENT MOUNTED ON MAIN BOARD
- LOCALLY MOUNTED INSTRUMENT WITH TWO SERVICES
- AUX. INSTRUMENT MOUNTED IN INTERFACE ROOM
- PILOT LIGHT
- INSTRUMENT MOUNTED BEHIND LOCAL BOARD
- MOUNTED ON LINE, PANEL

MISCELLANEOUS INSTRUMENT SYMBOLS

- CHEMICAL SEAL
- BOARD MOUNTED PATCHBOARD OR MATRIX BOARD CONNECTION, NUMBER IS
- PURGE OR FLUSHING DEVICE
- GENERALISED - FOR UNDEFINED OR COMPLEX INTERLOCK LOGIC
- INTERLOCK IS EFFECTIVE ONLY IF ALL INPUTS EXIST.
- INTERLOCK IS EFFECTIVE IF ANY ONE OR MORE INPUTS EXIST.
- F.S.B. ALARM AND FIREPUMP START STATION
- E.S.D. EMERGENCY SHUTDOWN STATION
- FROM EMERGENCY SHUTDOWN SYSTEM
- TO EMERGENCY SHUTDOWN SYSTEM
- TO COMPUTER
- FROM COMPUTER

MISCELLANEOUS LETTER ABBREVIATIONS

F.L.A. - FLAME ARRESTOR
L.B. - LUBRICATOR
C.S.C. - CAR SEAL CLOSED
C.S.O. - CAR SEAL OPEN
B.S.W. - LARGE SEDIMENT/WATER STRAINER
E.S.D. - EMERGENCY SHUTDOWN VALVE
V.F. - VENDOR FURNISHED
C.F. - CUSTOMER FURNISHED
N.C. - NORMALLY CLOSED
N.O. - NORMALLY OPEN
I.A. - INSTRUMENT AIR SUPPLY
S.P. - SET POINT
F.M. - FIRE MONITOR
H.R. - HOSE REEL
S.D. - SHUTDOWN
B.F. - BLIND FLANGE
L.E.L. - LOWER EXPLOSIVE LIMIT
M.P. - POPPING POINT
A.B.S. - ABS ABSOLUTE
W.G. - WATER GAUGE
P.P.M. - PARTS PER MILLION

VALVE SYMBOLS

- GATE
- BALL
- ROTARY PLUG OR BALL
- CHECK
- BUTTERFLY
- GLOBE
- NEEDLE
- PLUG

CONTROL VALVE BODY SYMBOLS

- GLOBE, GATE, OR OTHER IN-LINE TYPE NOT OTHERWISE IDENTIFIED
- ANGLE
- THREE-WAY
- FOUR-WAY
- ROTARY PLUG OR BALL
- BUTTERFLY, DAMPER OR LOUVRE
- CHOKE

VALVE ACTUATOR SYMBOLS

- DIAPHRAGM SPRING OPPOSED
- ROTARY MOTOR
- SPRING, WEIGHT OR INTEGRAL PILOT FOR PSV'S
- HAND ACTUATOR/MOUNTED AT TOP, SIDE, OR BOTTOM OR ACTUATED DEVICE AS APPLICABLE
- SOLENOID
- SINGLE-ACTING CYLINDER, WITHOUT POSITIONER OR OTHER PILOT
- DOUBLE-ACTING CYLINDER WITHOUT POSITIONER OR OTHER PILOT
- ANY CYLINDER THAT IS ASSEMBLED WITH PILOT SO THAT ASSEMBLY IS ACTUATED BY ONE CONTROLLED INPUT.
- LATCH-TYPE SOLENOID ACTUATOR WITH RESET (MANUAL RESET / REMOTE RESET)

SYMBOLS FOR SELF-ACTUATED REGULATORS, VALVES, AND OTHER DEVICES

- HAND-ACTUATED ON-OFF SWITCHING VALVE IN PNEUMATIC SIGNAL LINE
- LEVEL REGULATOR WITH MECHANICAL LINKAGE
- PRESSURE-REDUCING REGULATOR VALVE, EXTERNAL PRESSURE TAP
- BACKPRESSURE REGULATOR, SELF-CONTAINED
- PRESSURE-REDUCING REGULATOR WITH INTEGRAL OUTLET PRESSURE RELIEF VALVE, AND OPTIONAL PRESSURE INDICATOR (TYPICAL AIR SET).
- PRESSURE RELIEF, STRAIGHT-THROUGH PATTERN, SPRING- OR WEIGHT-LOADED, OR WITH INTEGRAL PILOT.
- PRESSURE AND VACUUM RELIEF VALVE, SPRING OR WEIGHT-LOADED, OR WITH INTEGRAL PILOT.
- RUPTURE DISK OR SAFETY HEAD FOR PRESSURE RELIEF.
- TEMPERATURE REGULATOR, FILLED-SYSTEM TYPE WITH WELL.
- MANUALLY ADJUSTABLE RESTRICTION ORIFICE IN PNEUMATIC SIGNAL LINE
- PRESSURE-REDUCING REGULATOR SELF CONTAINED
- DIFFERENTIAL-PRESSURE-REDUCING REGULATOR WITH INTERNAL AND EXTERNAL PRESSURE TAPS
- BACKPRESSURE REGULATOR WITH EXTERNAL PRESSURE TAP
- PRESSURE RELIEF, ANGLE PATTERN, SPRING OR WEIGHT LOADED, OR WITH INTEGRAL PILOT
- VACUUM RELIEF VALVE, ANGLE PATTERN, SPRING OR WEIGHT-LOADED, OR WITH INTEGRAL PILOT.
- PRESSURE AND VACUUM RELIEF MANHOLE COVER
- RUPTURE DISK OR SAFETY HEAD FOR VACUUM RELIEF.
- FUSIBLE PLUG OR DISK

SYMBOLS FOR ACTUATOR ACTION IN EVENT OF ACTUATOR POWER FAILURE (SHOWN TYPICALLY FOR DIAPHRAGM-ACTUATED CONTROL VALVE)

- TWO-WAY VALVE, FAIL OPEN
- ANY VALVE, FAIL LOCKED (POSITION DOES NOT CHANGE)
- THREE-WAY VALVE FAIL OPEN TO PATH A-C
- TWO-WAY VALVE, FAIL CLOSED
- ANY VALVE, FAIL INDETERMINATE

PRIMARY ELEMENT SYMBOLS

- ORIFICE PLATE WITH FLANGE OR CORNER TAPS
- ORIFICE PLATE IN QUICK CHANGE FITTING.
- ROTAMETER TYPE FLOW INDICATOR
- UNCLASSIFIED PRIMARY FLOW ELEMENT INTEGRAL WITH TRANSMITTER. (TARGET OR MASS FLOW ETC.)
- FIXED RESTRICTION ORIFICE
- GAUGE GLASS, INTEGRALLY MOUNTED ON TANK.
- LEVEL TRANSMITTER, INTERNAL FLOAT TYPE OR DISPLACER TYPE, MOUNTED ON TANK.
- LEVEL INDICATOR, FLOAT TYPE, WITH GAUGE BOARD OR TAPE INDICATOR MOUNTED ABOVE TANK.
- LEVEL TRANSMITTER FOR OPEN TANK WITH DIP TUBE AND AIR PURGE
- THERMOCOUPLE OR RESISTANCE BULB (RTD) TEMPERATURE ELEMENT CONNECTED TO TEMPERATURE INDICATOR
- ORIFICE PLATE WITH VENA CONTRACTA, RADIUS OR PIPE TAPS.
- TURBINE- OR PROPELLER-TYPE PRIMARY ELEMENT.
- POSITIVE-DISPLACEMENT-TYPE FLOW TOTALIZING INDICATOR
- PITOT TUBE OR PITOT VENTURI TUBE.
- FLOW SIGHT GLASS
- FLOW STRAIGHTENING VANES
- GAUGEGLASS EXTERNALLY MOUNTED.
- LEVEL INDICATOR, MAGNET-WINDOW TYPE, OR FLOAT OR DISPLACER TYPE.
- LEVEL TRANSMITTER, DIFFERENTIAL-PRESSURE TYPE, MOUNTED ON TANK.
- TEMPERATURE ELEMENT WITH WELL.
- FILLED-SYSTEM-TYPE TEMPERATURE INDICATOR WITH WELL.
- BIMETALLIC-TYPE THERMOMETER, GLASS THERMOMETER OR OTHER LOCAL UNCLASSIFIED TEMPERATURE INDICATOR.

RELAYS AND COMPUTE SYMBOLS

- ELECTRIC CURRENT SIGNAL ACTUATING PNEUMATIC CONTROL VALVE WITH SEPARATELY MOUNTED ELECTRO-PNEUMATIC CONVERTER. (SEE NOTE BELOW)
- SELECTOR RELAY WHOSE OUTPUT REPRESENTS HIGHER FLOW OF TWO INPUTS.
- FLOW SUMMATION RELAY.
- ELECTRIC CURRENT SIGNAL TO PNEUMATIC CONTROL VALVE FURNISHED WITH ATTACHED ELECTROPNEUMATIC SIGNAL CONVERTER. (SEE NOTE BELOW)
- SELECTOR RELAY WHOSE OUTPUT REPRESENTS LOWER FLOW OF TWO INPUTS.
- SQUARE ROOT EXTRACTOR
- DIFFERENTIAL RELAY

NOTE:
I/M IS USED FOR ELECTRIC CURRENT/HYDRAULIC CONVERTER.
E/P IS USED FOR ELECTRIC VOLTAGE/PNEUMATIC CONVERTER.
I/P IS USED FOR ELECTRIC CURRENT/PNEUMATIC CONVERTER.
E/I IS USED FOR ELECTRIC VOLTAGE/ELECTRIC CURRENT CONVERTER.

LINE AND PIPING SYMBOLS

- MAJOR PROCESS LINE
- MINOR PROCESS LINE
- INSTRUMENT PNEUMATIC SIGNAL
- INSTRUMENT CAPILLARY TUBING (FILLED SYSTEM)
- ELECTRICAL SIGNAL
- INSTRUMENT HYDRAULIC SIGNAL
- ELECTROMAGNET OR SONIC SIGNAL
- FUTURE PIPING
- INSULATED LINE
- SINGLE TRACED LINE (TYPE TO BE SPECIFIED)
- SKID LIMIT

TYPICAL PROCESS LINE IDENTIFICATION

12"G-10"-P-II

- LINE No.
- PIPE SPECIFICATION
- NOMINAL LINE SIZE
- TYPE OF INSULATION
- COMMODITY IN LINE

INSULATION TYPES

- CALCIUM SILICATE
- CELLULAR GLASS

EQUIPMENT SYMBOLS

- ELECTRIC MOTOR DRIVEN CENTRIFUGAL PUMP
- MOTOR DRIVEN RECIPROCATING PUMP
- MOTOR DRIVEN ROTARY OR GEAR PUMP
- ELECTRICAL GENERATOR
- ENGINE
- MOTOR DRIVEN FORCED DRAUGHT HEAT EXCHANGER
- EJECTOR/BOOSTER
- PERMANENT STRAINER
- CAP
- HOSE CONNECTION
- BLIND FLANGE
- BLIND AND SPACER
- TEMPORARY STRAINER
- EXPANSION JOINT
- REDUCER
- VENT
- FILTER
- PIPING SPECIALITY
- NOZZLE CONNECTION NUMBER
- FIXED TEMPERATURE FUSIBLE PLUG
- SPRINKLER HEAD (OPEN TYPE)
- FIRE HOSE
- WASHDOWN HOSEREEL
- DUTY SELECTOR SWITCH
- FLAME DETECTOR
- IONISATION SMOKE DETECTOR
- VICTAULIC COUPLING
- WECO HAMER COUPLING
- TURBINE DRIVEN CENTRIFUGAL PUMP
- MOTOR DRIVEN RECIPROCATING COMPRESSOR
- ELECTRIC MOTOR DRIVEN HYDRAULICALLY OPERATED AIR MOTOR DRIVER
- MOTOR DRIVEN CENTRIFUGAL COMPRESSOR
- TURBINE
- SHELL AND TUBE HEAT EXCHANGER
- MOTOR DRIVEN BLADE MIXER
- Y TYPE STRAINER
- SCREWED CAP
- FLOW DIRECTION
- FLANGE
- FIGURE BLIND
- DUPLEX BASKET STRAINER
- EXPANSION BELLOWS
- FLEXIBLE HOSE
- OPEN DRAIN
- TRAP OR DRAINER
- PUSH BUTTON STATION
- RATE OF TEMPERATURE RISE DETECTOR
- SPRINKLER HEAD (FUSIBLE TYPE)
- FIRE MONITOR
- HEATING ELEMENT
- GAS DETECTOR
- HAND PUMP
- SILENCER

AS BUILT
2 NOV 1977

FOR THE FOLLOWING GROUPS OF EMERGENCY SHUTDOWN VALVES REFER TO DWG ELN 2110-7044		
GROUP 'A'	GROUP 'B'	GROUP 'C'
ESDV-V14-1	ESDV-V10-1	ESDV-V61-1
ESDV-V14-2	ESDV-V10-2	ESDV-V61-2
ESDV-V14-3	ESDV-V18-3	ESDV-V61-3
ESDV-V14-4	ESDV-V18-4	ESDV-V61-4
ESDV-V14-5	ESDV-V18-5	ESDV-V61-5
ESDV-V14-6	ESDV-V18-6	ESDV-V61-6

FOR THE FOLLOWING GROUP OF EMERGENCY SHUTDOWN BLOWDOWN VALVES REFER TO DWG ELN 2110-7045		
GROUP 'W'		
ESDV-V14-5	ESDV-V61-5	
ESDV-V14-6	ESDV-V61-6	
ESDV-V18-5	ESDV-V18-5	
ESDV-V18-6		
ESDV-V10-5		
ESDV-V10-6		
ESDV-V14-7		
ESDV-V14-8		

FOR THE FOLLOWING GROUPS OF EMERGENCY SHUTDOWN VALVES REFER TO DWG ELN 2110-7044	
GROUP 'U'	GROUP 'V'
ESDV-V10-3	ESDV-V61-3
ESDV-V10-4	ESDV-V61-4
ESDV-V61-5	ESDV-V61-5
ESDV-V61-6	ESDV-V61-6

NOTE
THIS GROUPING IS PART OF THE EMERGENCY SHUTDOWN CONTROL AND FOR CONTINUATION REFER TO THE FOLLOWING TABLES LISTED ABOVE.

ELF - NORGE
FRIGG FIELD

TREATMENT PLATFORM No1
NORTH SEA JOB 1-40-C2 W.O. 104 M

McDERMOTT - HUDSON
LONDON & PARIS

DRAWING	NONE	REVISION	ELN 2110
		00	A403

END FOR PIPING AND INSTRUMENT DIAGRAMS

ELN 2110 | A404

P26A/B&C METHANOL FLUSHING PUMPS

V46A/B&C METHANOL STORAGE TANKS

VIC
FWKO SEPARATOR
2·388M I.D. × 9·144M T-T
(94"I.D.× 30'-0" T-T)
15×10⁶ SCMD GAS
(529·65×10⁶ SCFD)
MWP 172 BARS ABS
(2479 PSIG)
MWT 50°C (122°F)
VESSEL TRIM No 148EF

M1
SPHERICAL PIG RECEIVER
VESSEL TRIM Nº 148EF

VIB
FWKO SEPARATOR
2·388M I.D. × 9·144M T-T
(94"I.D. × 30'-0" T-T)
15×10⁶ SCMD GAS
(529·65×10⁶ SCFD)
MWP 172 BARS ABS
(2479 PSIG)
MWT 50°C (122°F)
VESSEL TRIM Nº 148EF

M2
SPHERICAL PIG RECEIVER
VESSEL TRIM Nº 149EF

VIA
FWKO SEPARATOR
2·388M I.D. × 9·144M T-T
(94"I.D. × 30'-0" T-T)
15×10⁶ SCMD GAS
(529·65×10⁶ SCFD)
MWP 172 BARS ABS
(2479 PSIG)
MWT 50°C (122°F)
VESSEL TRIM Nº 147EF

FUTURE COMPRESSOR PLATFORM TCP-2

AS BUILT
2 NOV 1977

NOTES:-
1 TEMPORARY CONNECTION FOR INITIAL GAS PRODUCTION THROUGH 8" MUD KILL LINE.
2 VALVES TO BE BLIND FLANGED ON REMOVAL OF TEST/PROVING LINE.
3 THESE LINES ARE ONLY TEMPORARILY INSTALLED DURING PRESSURE TESTING.
4 THESE PI'S SHALL BE USED FOR SETTING AT START UP FOR ALL CHOKE VALVES ON LINES 6EC-V6EC2 & 6EC-V6EC3 THEY ARE TEST GAUGES AND WILL NOT BE TAGGED.
5 VALVES CLOSED BY PXL-V1A-2, PSL-V2A-22A & PX-V2A-5 (SEE A407).
6 VALVES CLOSED BY PXL-V1B-2, PSL-V2B-22A & PX-V2B-5 (SEE A407).
7 VALVES CLOSED BY PXL-V1C-2, PSL-V2C-22A & PX-V2C-5 (SEE A407).
8 SPOOL PIECES TO BE INSERTED ONLY WHEN VESSEL IS DEANED.

AS BUILT INFORMATION RECEIVED OCT 1977 TO US

ELF-NORGE
FRIGG FIELD

TREATMENT PLATFORM Nº1
JOB 1-80-C2

McDERMOTT – HUDSON
LONDON – ENGLAND

PIPING AND INSTRUMENT DIAGRAM
GAS STORE & TCP-2 & CAL PIG RECEIVER

DRAWN	SCALE	DATE	DWG NO
J.NO.	—	8TH NOV 1977	ELN 2110
		CO	A404

REVISIONS	DATE	APP
SEE REVISION LIST	7-9-76	
SEE REVISION LIST	7-9-76	
SEE REVISION LIST	7-9-76	

DWG NO ELN 2110 | SHEET NO A405

V2A
GLYCOL CONTACTOR
3·302M I.D x 8·534MT-T
(180"I.D x 28'-0"T-T)
15 x 10⁶ SCMD GAS
(529·65 x 10⁶ SCFD)
MWP 172 BARG ABS. (2479 PSIG)
MWT 50°C (122°F)
VESSEL TRIM Nº 150EF

E2A
GLYCOL COOLER
0·842 x 10⁶ Kcal/Hr (3·34 x 10⁶ BTU/HR)

V2B
GLYCOL CONTACTOR
3·302M I.D x 8·534MT-T
(180"I.D x 28'-0"T-T)
15 x 10⁶ SCMD GAS
(529·65 x 10⁶ SCFD)
MWP 172 BARG ABS. (2479 PSIG)
MWT 50°C (122°F)
VESSEL TRIM Nº 151EF

E2B
GLYCOL COOLER
0·842 x 10⁶ Kcal/Hr (3·34 x 10⁶ BTU/HR)

V2C
GLYCOL CONTACTOR
3·302M I.D x 8·534MT-T
(180"I.D. x 28'-0" T-T)
15 x 10⁶ SCMD GAS
(529·65 x 10⁶ SCFD)
MWP 172 BARS ABS. (2479 PSIG)
MWT 50°C (122°F)
VESSEL TRIM Nº 152EF

E2C
GLYCOL COOLER
0·842 x 10⁶ Kcal/Hr (3·34 x 10⁶ BTU/HR)

TO H.P. RELIEF SYSTEM C.O.S. A424

TO HIGH PRESSURE RELIEF SYSTEM C.O.S. A424

HP GAS 111EF-18"-P

HP GAS 112EF-18"-P

HP GAS 114EF-18"-P

114EF-18"-P TO SALES GAS HEADER

115EF-18"-P TO SALES GAS HEADER

116EF-18"-P TO SALES GAS HEADER

SEE DETAIL 'D' SHT. A405

SALES GAS HEADER

124.8-32"-P (1 OFF WT. APT SLX-65)

V2A V2B V2C

E2A E2B E2C

SEE DETAIL 'A' SHT. A405

TO STOP PUMPS P08B & E2A COS A412

TO STOP PUMPS P08A & E2B COS A411

TO STOP PUMPS P08A & E2C COS A410

TO PV-V2A-22 COS A407

TO PV-V2B-22 COS A407

TO PV-V2C-22 COS A407

ELECTRIC TRACE

FROM LT-V14A-3 OR COS A412

FROM LT-V14B-3 OR COS A411

FROM LT-V14C-3 OR COS A410

LEAN GLYCOL

RICH GLYCOL

265 ℓ/MIN.

NOTES
1. THESE PI'S SHALL BE USED FOR SETTING AT START UP ALL CHOKES ON LINES,- 552, 553, & 556. THE PI'S ARE TEST GAUGES AND WILL NOT BE TAGGED
2. VALVES CLOSED BY PXL-V1A-2, PSL-V2A-22A &, PX-V2A-5 (SEE P&ID A407), ALSO STOPS COOLER E2A.
3. VALVES CLOSED BY PXL-V1B-2, PSL-V2B-22A & PX-V2B-5 (SEE P&ID A407), ALSO STOPS COOLER E2B.
4. VALVES CLOSED BY PXL-V1C-2, PSL-V2C-22A & PX-V2C-5 (SEE P&ID A407), ALSO STOPS COOLER E2C.
5. SPOOL PIECE TO BE INSERTED ONLY WHEN VESSEL IS DRAINED.

557EF-3"-G-1	LEAN GLYCOL FROM REBOILER
558EF-2"-G-1	RICH GLYCOL TO REBOILER
555EF-3"-G-1	LEAN GLYCOL FROM REBOILER
556EF-2"-G-1	RICH GLYCOL TO REBOILER
551EF-3"-G-1	LEAN GLYCOL FROM REBOILER
552EF-2"-G-1	RICH GLYCOL TO REBOILER
654 EF-12"-HD	HYDROCARBON DUMP HEADER

HYDROCARBON DUMP HEADER 654 EF-12"-HD

TO DRAINAGE SYSTEM C.O.S. A428

2 NOV 1977

AS BUILT

AS BUILT TO INFORMATION RECEIVED UP TO 01/11/77

* TOTAL OIL MARINE SPECIFICATIONS MP-L-1,6,7,8,9,10,11,12,13 (900# ANSI RATING)

DETAIL 'A' (TYPICAL)

110# I/A TO HOLD CLOSED — 110# I/A TO OPEN — ESD

VALVE CONTROL BOX CONTAINING 4 PILOT VALVES & 2 SPEED CONTROLS — LOCAL MANUAL CONTROL — TO & FROM HYDRAULIC POWER UNITS — DELIVERY / RETURN

FULLY OPEN — FULLY CLOSED

ESDV Nº	SHEET Nº	ESDV Nº	SHEET Nº
V1A-1	A404	V2B-1	A405
V1A-2	A404	V2B-2	A405
V1A-3	A404	V2B-4	A407
V1A-4	A404	V2C-1	A405
V1B-1	A404	V2C-2	A405
V1B-2	A404	V2C-4	A407
V1B-3	A404	TCP2-1	A406
V1B-4	A404	M1-2	A404
V1C-1	A404		
V1C-2	A404	B-2	A404
V1C-3	A404	B-3	A405
V1C-4	A404	B7	A409
V2A-1	A405	B-5	A404
V2A-2	A405		
V2A-4	A407		

DETAIL 'B' (TYPICAL)

VENT AIR TO AUTHORIZE MANUAL OPENING OF VALVES — VENT AIR TO CLOSE VALVE — ESD

3-15# FROM PT-M1-1

3-15# FROM PY-M1/2-1

3-15# FROM PT-M1-3

VALVE CONTROL BOX CONTAINING 4 PILOT VALVES & 2 SPEED CONTROLS — LOCAL MANUAL CONTROL — TO & FROM HYDRAULIC POWER UNIT — RETURN / DELIVERY — N2 TANK — ACCUMULATOR — FULLY OPEN — FULLY CLOSED

ESDV Nº	SHEET Nº	ESDV Nº	SHEET Nº
M1-1	A404		
M2-1	A404		
M3-1	A405		
M4-1	A406		
M5-1	A406		
M3-2	A408		
M3A-1	A410		

DETAIL 'C' (TYPICAL)

TO & FROM HYDRAULIC POWER UNIT — DELIVERY / RETURN — VALVE CONTROL BOX CONTAINING 1 PILOT VALVE & 2 SPEED CONTROLS — LOCAL MANUAL CONTROL — FULLY OPEN — FULLY CLOSED

HV Nº	SHEET Nº	HV Nº	SHEET Nº	HV Nº	SHEET Nº	HV Nº	SHEET Nº	HV Nº	SHEET Nº	HV Nº	SHEET Nº
V1A-1	A404	V1C-4	A404	M1-1	A404	M2-3	A404	M4-1	A406	M5-4	A406
V1A-3	A404	V2A-1	A407	M1-2	A404	M2-4	A404	M4-2	A406	M5-5	A406
V1A-4	A404	V2A-2	A407	M1-3	A404	M2-5	A404	M4-3	A406		
V1B-1	A404	V2B-1	A407	M1-4	A404	M2-6	A404	M4-4	A406	M3-6	A407
V1B-3	A404	V2B-2	A407	M1-5	A404			M4-5	A406	M5-6	A407
V1B-4	A404	V2C-1	A407	M1-6	A404			M4-6	A406	M5-1	A406
V1C-1	A404	V2C-2	A407	M2-1	A404			M5-1	A406	M5-2	A406
V1C-3	A404			M2-2	A404			M5-2	A406	M5-3	A405

DETAIL 'D' (TYPICAL) ESDV's BLOWDOWN VALVES

ESD 1/A 36" — BLOWDOWN ACTION — CA — FULLY OPEN — HSD V1A-5 — 36" I/A — EXV V1A-5 — EZSH V1A-5 — EZSL V1A-5 — FULLY CLOSED — F.O — ESDV V1A-5

ESDV Nº	SHEET Nº	ESDV Nº	SHEET Nº	ESDV Nº	SHEET Nº
V1A-5	A404	V2B-3	A405	M1-3	A404
V1B-5	A404	V2C-3	A405	M2-3	A404
V1C-5	A404	V2A-3	A405	V2C-6	A407
V1A-6	A404	V2B-5	A405		
V1B-6	A404	V2B-6	A406		
V1C-6	A404	V2C-7	A407		
V1C-7	A404				
V2A-3	A404				

ELF - NORGE
FRIGG FIELD

TREATMENT PLATFORM Nº1
JOB 1-40-C2

McDERMOTT - HUDSON
LONDON — ENGLAND

J G YOUNG — SCALE — — DATE 12TH NOV 1979 — DWG NO ELN 2110 — REVISION 00 — SHEET NO A405

PIPING & INSTRUMENT DIAGRAM GLYCOL CONTACTORS

REVISIONS	DATE	APP
SEE REVISION LIST	9 7 77	
SEE REVISION LIST	14 7 77	
SEE REVISION LIST	27 7 77	
SEE REVISION LIST	2 8 77	
SEE REVISION LIST	21 8 77	
SEE REVISION LIST	4 11 77	
AS BUILT	3-8-77	
SEE REVISION LIST	2-8-77	
SEE REVISION LIST		

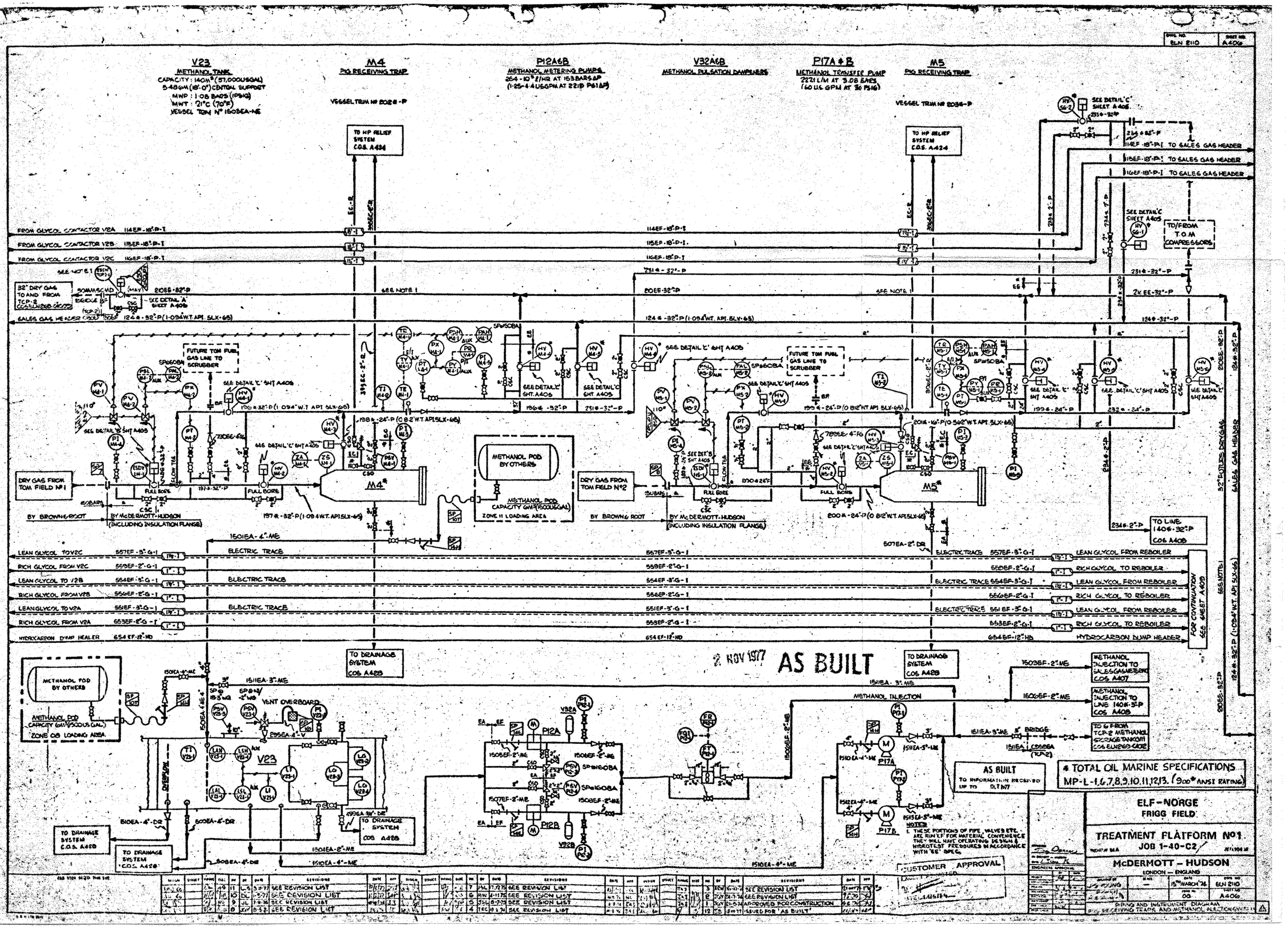

DWG. NO. ELN 2110
SHEET NO. A406
V23
METHANOL TANK
CAPACITY: 140M³ (57,000USGAL)
5.48GM (18'-0") CENTRAL SUPPORT
MWP: 1.08 BARS (1PSIG)
MWT: 21°C (70°F)
VESSEL TRIM Nº 1503EA-NE
M4
PIG RECEIVING TRAP
VESSEL TRIM Nº 202E-P
P12A&B
METHANOL METERING PUMPS
254-10³ l/HR AT 153BARS ΔP
(1.25-4.4USGPM AT 2218 PSI ΔP)
V32A&B
METHANOL PULSATION DAMPENERS
P17A & B
METHANOL TRANSFER PUMP
2271 L/M AT 3.08 BARS
(60 US GPM AT 30 PSIG)
M5
PIG RECEIVING TRAP
VESSEL TRIM Nº 203E-P
TO HP RELIEF SYSTEM C.O.S. A424
FROM GLYCOL CONTACTOR V2A 114EF-18"-P-I
FROM GLYCOL CONTACTOR V2B 115EF-18"-P-I
FROM GLYCOL CONTACTOR V2C 116EF-18"-P-I
32" DRY GAS TO AND FROM TCP-2
SALES GAS HEADER
FUTURE TOM FUEL GAS LINE TO SCRUBBER
DRY GAS FROM TOM FIELD Nº1
DRY GAS FROM TOM FIELD Nº2
BY BROWN & ROOT
BY McDERMOTT-HUDSON (INCLUDING INSULATION FLANGE)
METHANOL POD BY OTHERS
METHANOL POD CAPACITY 6M³ (1500USGAL)
ZONE 11 LOADING AREA
TO LINE 140*-32"-P COS A408
TO/FROM T.O.M COMPRESSORS
TO SALES GAS HEADER
32" FUTURE DRY GAS
SALES GAS HEADER
LEAN GLYCOL TO V2C
RICH GLYCOL FROM V2C
LEAN GLYCOL TO V2B
RICH GLYCOL FROM V2B
LEAN GLYCOL TO V2A
RICH GLYCOL FROM V2A
HYDROCARBON DUMP HEADER
ELECTRIC TRACE
LEAN GLYCOL FROM REBOILER
RICH GLYCOL TO REBOILER
HYDROCARBON DUMP HEADER
FOR CONTINUATION SEE SHEET A409
TO DRAINAGE SYSTEM COS A428
METHANOL POD BY OTHERS
METHANOL POD CAPACITY 6M³ (1500USGAL)
ZONE 08 LOADING AREA
VENT OVERBOARD
METHANOL INJECTION
METHANOL INJECTION TO SALES GAS METERING COS A407
METHANOL INJECTION TO LINE 140*-3"-P COS A408
TO 6 FROM TCP-2 METHANOL STORAGE TANK 0/11 COS ELN2169-C402
AS BUILT
2 NOV 1977
AS BUILT
TO INFORMATION RECEIVED UP TO OCT 1977
* TOTAL OIL MARINE SPECIFICATIONS
MP-L-1,6,7,8,9,10,11,12,13. (900# ANSI RATING)
NOTES
1. THESE PORTIONS OF PIPE, VALVES ETC. ARE RUN 'EF' FOR MATERIAL CONVENIENCE THEY WILL HAVE OPERATING DESIGN & HYDROTEST PRESSURES IN ACCORDANCE WITH 'EE' SPEC.
CUSTOMER APPROVAL
ELF-NORGE
FRIGG FIELD
TREATMENT PLATFORM Nº1
JOB 1-40-C2
McDERMOTT - HUDSON
LONDON — ENGLAND
15TH MARCH '74
ELN 2110
A406
PIPING AND INSTRUMENT DIAGRAM
RECEIVING TRAPS AND METHANOL INJECTION SYSTEM

DWG NO ELN 2110 | SHEET NO A 407

NOTES:
1. SIGNAL TRANSMISSION IS VIA TRANSDUCER ROOM TO TELEMETRY AND COMPUTER SYSTEMS.
2. PANEL 'A' LOCATED ADJACENT TO FT-V2A-4
3. PANEL 'B' LOCATED ADJACENT TO FT-V2B-4
4. PANEL 'C' LOCATED ADJACENT TO FT-V2C-4
5. SEE NOTE 1 ON SHT ELN 2110 A406
6. LOCATE FLARE GAS IGNITION PANEL (SEE DWG ELN 2110-A419) BY CHOICE
7. IF MC-MS-1 (OR MC-7-1 OR MC-8-1 ON TCP-2 IF MANUALLY SELECTED) AND A STREAM MOISTURE ANALYSER ADE 80N IN ALARM CONDITION THEN THAT STREAM WILL BE SHUTDOWN
8. THIS PI SHALL BE USED AT START UP TO SET CHOKES SP-SPL SP-SCL-2 THIS PI IS A TEST GAUGE AND NOT TAGGED
9. INSTRUMENTS WITHIN BOX SHOWN THUS ---- ARE LOCATED ON PRESSURE RESET PANEL

FUEL GAS FROM LINE TO ST FERGUS COS A408

FT-V2A-5/DT-V2A-15/TT-V2A-5
FT-V2B-5/PT-V2B-15/TT-V2B-5
FT-V2C-5/PT-V2C-15/TT-V2C-5

TO ST FERGUS

FROM GLYCOL CONTACTOR V2A — 114EF-18"-P
FROM GLYCOL CONTACTOR V2B — 115EF-18"-P
FROM GLYCOL CONTACTOR V2C — 116EF-18"-P

TO LP VENT SYSTEM COS C4029

SAMPLE POINT

BY INSTRUMENTS

TO/FROM MC-MS-1 SEE NOTE 7 COS C408

STOP GLYCOL PUMPS P10 A&B (COS A 410) & EC2 (COS A 405)

STOP GLYCOL PUMPS P10 C&D (COS A 411) & E2B (COS A 405)

STOP GLYCOL PUMPS P10 E&F (COS A 412) & E2A (COS A 405)

TO HP RELIEF SYSTEM COS A424

FROM METHANOL STORAGE TANK V25 LINE 1506-EF-2-ME COS C406

METHANOL INJECTION

1509-EF-2"-ME

SPARGER

INSULATION BOOT

ESD

TO HP RELIEF SYSTEM COS A424

TO FUTURE "TOM FUEL GAS SCRUBBER"

SALES GAS HEADER NO 2 - 52"-P TO ST FERGUS ECOFUND COS A 405

SALES GAS HEADER 124 & 52"-P

210 EE-52"-P

1284 & 52"-P (1.034 WI API FLUX 66) SALES GAS HEADER

752 EF-8"-PG FUEL GAS TO E3

752 EF-8"-PG FUEL GAS TO E3

FROM FUEL GAS START-UP HEADER COS A406

VENT

SEE DETAIL 'A' SHT A405

SEE DETAIL 'B' SHT A405

SEE DETAIL 'C' SHT A405

SEE DETAIL 'C' SHT A406

SEE NOTE 5 — 52" DRY GAS TO/FROM TCP-2

(SEE NOTE 5)

* TOTAL OIL MARINE SPECIFICATIONS MDL-1.6.7.8.9.10.11.12.&13. (900°ANSI RATING)

AS BUILT
TO INFORMATION RECEIVED UP TO OCT 77

4 NOV 1977
AS BUILT

CUSTOMER APPROVAL
BY
DATE 24.6.86

NO	BY	DATE	REVISIONS	DATE	APP.
14	KB	7-9-76	SEE REVISION LIST	14-1-76	SS
13	JJP	1-6-76	APPROVED FOR CONSTRUCTION	31-12-75	
12	JD	17-5-76	ISSUED FOR CLIENTS APPROVAL	24-11-75	
11	JD	9-3-76	RE-ISSUED ON FINK COPY	24-11-75	
17	AS	5-10-77	ISSUED FOR "AS BUILT"		
16	KB	10-7-77	SEE REVISION LIST		
15	JP	2-5-77	SEE REVISION LIST		

ELF-NORGE
FRIGG FIELD
TREATMENT PLATFORM NO1
JOB 1-40-C2
NORTH SEA
McDERMOTT — HUDSON
LONDON — ENGLAND

ENGINEERS APPROVAL
Tony Lawrence 1.3.76

DRAWN	CHECKED	APPROVED	SCALE	DWG NO
J FALVEY	NONE	250 MM "W		ELN 2110
A.S. WOOLFOLD		90		A 407

PIPING AND INSTRUMENT DIAGRAM SALES GAS METERING SYSTEM

DWG NO ELN 2110 | SHEET NO A408

NOTES:
1. IF MC-M3-1 (OR MC-7-1 OR MC-8-1 ON TCP-2 IF MANUALLY SELECTED) AND A STREAM MOISTURE ANALYSER ARE BOTH IN ALARM CONDITION THEN THAT STREAM WILL BE SHUTDOWN

E3
FUEL GAS HEAT EXCHANGER
SHELL SIDE MWP 16.19 BARG (220PSIG)
MWT MIN WT -45.6°C (-50°F) MAX WT -29.8°C (-10°F)
TUBE SIDE MWP 172 BARG ABS (2479 PSIG)
MWT 60°C (122°F)
INSUL: 0.114 M (4½") CELLULAR GLASS

M9
CONDENSATE PIG RECEIVER
VESSEL TRIM NO 192EF-P

V6
FUEL GAS SCRUBBER
O.814M I.D x 3.00M T-T (36"I.D x 10'-0" T-T)
MWP 16.19BARG ABS (220.0 PSIG)
MWT +65.6°C (+150°F) OP. T. -29.3°C (-10°F)
VESSEL TRIM NO 75B6G-PG
INSUL: 0.114 M (4½") CELLULAR GLASS

M3
SCRAPER PIG LAUNCHER
VESSEL TRIM NO 193B

AS BUILT 8 NOV 1977

* TOTAL OIL MARINE SPECIFICATIONS MP-L-1,6,7,8,9,10,11,12,&13, (900# ANSI RATING)

AS BUILT TO INFORMATION RECEIVED UP TO OCT 1977

ELF-NORGE
FRIGG FIELD
TREATMENT PLATFORM NO 1
JOB 1-40-C2
McDERMOTT - HUDSON
LONDON — ENGLAND
15th MARCH '74 | ELN 2110 | A408 | 00

REVISIONS	DATE	APP
SEE REVISION LIST	17-7-74	
SEE REVISION LIST	31-7-74	
APPROVED FOR CONSTRUCTION	4.8.74	
SEE REVISION LIST	11-11-74	
SEE REVISION LIST	15-11-74	
SEE REVISION LIST	19-12-74	
SEE REVISION LIST	21-1-75	
SEE REVISION LIST	17-2-75	
SEE REVISION LIST	19-3-75	
SEE REVISION LIST	15-5-75	
SEE REVISION LIST	17-6-75	
SEE REVISION LIST	15-7-75	
SEE REVISION LIST	15-8-75	
SEE REVISION LIST	15-9-75	
SEE REVISION LIST	15-10-75	
SEE REVISION LIST	15-11-75	
SEE REVISION LIST	15-12-75	
SEE REVISION LIST	15-1-76	
SEE REVISION LIST	15-2-76	
SEE REVISION LIST	15-3-76	
SEE REVISION LIST	15-4-76	
SEE REVISION LIST	15-5-76	
SEE REVISION LIST	15-6-76	
SEE REVISION LIST	15-7-76	
SEE REVISION LIST	15-8-76	
SEE REVISION LIST	15-9-76	
SEE REVISION LIST	15-10-76	
SEE REVISION LIST	15-11-76	
SEE REVISION LIST	15-12-76	
SEE REVISION LIST	15-1-77	
SEE REVISION LIST	15-2-77	
SEE REVISION LIST	15-3-77	
SEE REVISION LIST	15-4-77	
SEE REVISION LIST	15-5-77	
SEE REVISION LIST	15-6-77	
SEE REVISION LIST	15-7-77	
SEE REVISION LIST	15-8-77	
SEE REVISION LIST	15-9-77	
SEE REVISION LIST	15-10-77	
SEE REVISION LIST	15-11-77	
SEE REVISION LIST	15-12-77	
SEE REVISION LIST	15-1-78	
SEE REVISION LIST	15-2-78	
SEE REVISION LIST	15-3-78	
SEE REVISION LIST	15-4-78	
SEE REVISION LIST	15-5-78	
SEE REVISION LIST	15-6-78	
SEE REVISION LIST	15-7-78	
SEE REVISION LIST	15-8-78	
SEE REVISION LIST	15-9-78	
SEE REVISION LIST	15-10-78	
SEE REVISION LIST	15-11-78	
SEE REVISION LIST	15-12-78	
SEE REVISION LIST	15-1-79	
SEE REVISION LIST	15-2-79	
SEE REVISION LIST	15-3-79	
SEE REVISION LIST	15-4-79	
SEE REVISION LIST	15-5-79	
SEE REVISION LIST	15-6-79	
SEE REVISION LIST	15-7-79	
SEE REVISION LIST	15-8-79	
SEE REVISION LIST	15-9-79	
SEE REVISION LIST	15-10-79	
SEE REVISION LIST	15-11-79	
SEE REVISION LIST	15-12-79	
SEE REVISION LIST	15-1-80	
SEE REVISION LIST	15-2-80	
SEE REVISION LIST	15-3-80	
SEE REVISION LIST	15-4-80	
SEE REVISION LIST	15-5-80	
SEE REVISION LIST	15-6-80	
SEE REVISION LIST	15-7-80	
SEE REVISION LIST	15-8-80	
SEE REVISION LIST	15-9-80	
SEE REVISION LIST	15-10-80	
SEE REVISION LIST	15-11-80	
SEE REVISION LIST	15-12-80	
SEE REVISION LIST	15-1-81	
SEE REVISION LIST	15-2-81	
SEE REVISION LIST	15-3-81	
SEE REVISION LIST	15-4-81	
SEE REVISION LIST	15-5-81	
SEE REVISION LIST	15-6-81	
SEE REVISION LIST	15-7-81	
SEE REVISION LIST	15-8-81	
SEE REVISION LIST	15-9-81	
SEE REVISION LIST	15-10-81	
SEE REVISION LIST	15-11-81	
SEE REVISION LIST	15-12-81	
SEE REVISION LIST	15-1-82	
SEE REVISION LIST	15-2-82	
SEE REVISION LIST	15-3-82	
SEE REVISION LIST	15-4-82	
SEE REVISION LIST	15-5-82	
SEE REVISION LIST	15-6-82	
SEE REVISION LIST	15-7-82	
SEE REVISION LIST	15-8-82	
SEE REVISION LIST	15-9-82	
SEE REVISION LIST	15-10-82	
SEE REVISION LIST	15-11-82	
SEE REVISION LIST	15-12-82	
SEE REVISION LIST	15-1-83	
SEE REVISION LIST	15-2-83	
SEE REVISION LIST	15-3-83	
SEE REVISION LIST	15-4-83	
SEE REVISION LIST	15-5-83	
SEE REVISION LIST	15-6-83	
SEE REVISION LIST	15-7-83	
SEE REVISION LIST	15-8-83	
SEE REVISION LIST	15-9-83	
SEE REVISION LIST	15-10-83	
SEE REVISION LIST	15-11-83	
SEE REVISION LIST	15-12-83	
SEE REVISION LIST	15-1-84	
SEE REVISION LIST	15-2-84	
SEE REVISION LIST	15-3-84	
SEE REVISION LIST	15-4-84	
SEE REVISION LIST	15-5-84	
SEE REVISION LIST	15-6-84	
SEE REVISION LIST	15-7-84	
SEE REVISION LIST	15-8-84	
SEE REVISION LIST	15-9-84	
SEE REVISION LIST	15-10-84	
SEE REVISION LIST	15-11-84	
SEE REVISION LIST	15-12-84	
SEE REVISION LIST	15-1-85	
SEE REVISION LIST	15-2-85	
SEE REVISION LIST	15-3-85	
SEE REVISION LIST	15-4-85	
SEE REVISION LIST	15-5-85	
SEE REVISION LIST	15-6-85	
SEE REVISION LIST	15-7-85	
SEE REVISION LIST	15-8-85	
SEE REVISION LIST	15-9-85	
SEE REVISION LIST	15-10-85	
SEE REVISION LIST	15-11-85	
SEE REVISION LIST	15-12-85	
SEE REVISION LIST	15-1-86	
SEE REVISION LIST	15-2-86	
SEE REVISION LIST	15-3-86	
SEE REVISION LIST	15-4-86	
SEE REVISION LIST	15-5-86	
SEE REVISION LIST	15-6-86	
SEE REVISION LIST	15-7-86	
SEE REVISION LIST	15-8-86	
SEE REVISION LIST	15-9-86	
SEE REVISION LIST	15-10-86	
SEE REVISION LIST	15-11-86	
SEE REVISION LIST	15-12-86	
SEE REVISION LIST	15-1-87	
SEE REVISION LIST	15-2-87	
SEE REVISION LIST	15-3-87	
SEE REVISION LIST	15-4-87	
SEE REVISION LIST	15-5-87	
SEE REVISION LIST	15-6-87	
SEE REVISION LIST	15-7-87	
SEE REVISION LIST	15-8-87	
SEE REVISION LIST	15-9-87	
SEE REVISION LIST	15-10-87	
SEE REVISION LIST	15-11-87	
SEE REVISION LIST	15-12-87	
SEE REVISION LIST	15-1-88	
SEE REVISION LIST	15-2-88	
SEE REVISION LIST	15-3-88	
SEE REVISION LIST	15-4-88	
SEE REVISION LIST	15-5-88	
SEE REVISION LIST	15-6-88	
SEE REVISION LIST	15-7-88	
SEE REVISION LIST	15-8-88	
SEE REVISION LIST	15-9-88	
SEE REVISION LIST	15-10-88	
SEE REVISION LIST	15-11-88	
SEE REVISION LIST	15-12-88	
SEE REVISION LIST	15-1-89	
SEE REVISION LIST	15-2-89	
SEE REVISION LIST	15-3-89	
SEE REVISION LIST	15-4-89	
SEE REVISION LIST	15-5-89	
SEE REVISION LIST	15-6-89	
SEE REVISION LIST	15-7-89	
SEE REVISION LIST	15-8-89	
SEE REVISION LIST	15-9-89	
SEE REVISION LIST	15-10-89	
SEE REVISION LIST	15-11-89	
SEE REVISION LIST	15-12-89	
SEE REVISION LIST	15-1-90	
SEE REVISION LIST	15-2-90	
SEE REVISION LIST	15-3-90	
SEE REVISION LIST	15-4-90	
SEE REVISION LIST	15-5-90	
SEE REVISION LIST	15-6-90	
SEE REVISION LIST	15-7-90	
SEE REVISION LIST	15-8-90	
SEE REVISION LIST	15-9-90	
SEE REVISION LIST	15-10-90	
SEE REVISION LIST	15-11-90	
SEE REVISION LIST	15-12-90	
SEE REVISION LIST	15-1-91	
SEE REVISION LIST	15-2-91	
SEE REVISION LIST	15-3-91	
SEE REVISION LIST	15-4-91	
SEE REVISION LIST	15-5-91	
SEE REVISION LIST	15-6-91	
SEE REVISION LIST	15-7-91	
SEE REVISION LIST	15-8-91	
SEE REVISION LIST	15-9-91	
SEE REVISION LIST	15-10-91	
SEE REVISION LIST	15-11-91	
SEE REVISION LIST	15-12-91	
SEE REVISION LIST	15-1-92	
SEE REVISION LIST	15-2-92	
SEE REVISION LIST	15-3-92	
SEE REVISION LIST	15-4-92	
SEE REVISION LIST	15-5-92	
SEE REVISION LIST	15-6-92	
SEE REVISION LIST	15-7-92	
SEE REVISION LIST	15-8-92	
SEE REVISION LIST	15-9-92	
SEE REVISION LIST	15-10-92	
SEE REVISION LIST	15-11-92	
SEE REVISION LIST	15-12-92	
SEE REVISION LIST	15-1-93	
SEE REVISION LIST	15-2-93	
SEE REVISION LIST	15-3-93	
SEE REVISION LIST	15-4-93	
SEE REVISION LIST	15-5-93	
SEE REVISION LIST	15-6-93	
SEE REVISION LIST	15-7-93	
SEE REVISION LIST	15-8-93	
SEE REVISION LIST	15-9-93	
SEE REVISION LIST	15-10-93	
SEE REVISION LIST	15-11-93	
SEE REVISION LIST	15-12-93	
SEE REVISION LIST	15-1-94	
SEE REVISION LIST	15-2-94	
SEE REVISION LIST	15-3-94	
SEE REVISION LIST	15-4-94	
SEE REVISION LIST	15-5-94	
SEE REVISION LIST	15-6-94	
SEE REVISION LIST	15-7-94	
SEE REVISION LIST	15-8-94	
SEE REVISION LIST	15-9-94	
SEE REVISION LIST	15-10-94	
SEE REVISION LIST	15-11-94	
SEE REVISION LIST	15-12-94	
SEE REVISION LIST	15-1-95	
SEE REVISION LIST	15-2-95	
SEE REVISION LIST	15-3-95	
SEE REVISION LIST	15-4-95	
SEE REVISION LIST	15-5-95	
SEE REVISION LIST	15-6-95	
SEE REVISION LIST	15-7-95	
SEE REVISION LIST	15-8-95	
SEE REVISION LIST	15-9-95	
SEE REVISION LIST	15-10-95	
SEE REVISION LIST	15-11-95	
SEE REVISION LIST	15-12-95	
SEE REVISION LIST	15-1-96	
SEE REVISION LIST	15-2-96	
SEE REVISION LIST	15-3-96	
SEE REVISION LIST	15-4-96	
SEE REVISION LIST	15-5-96	
SEE REVISION LIST	15-6-96	
SEE REVISION LIST	15-7-96	
SEE REVISION LIST	15-8-96	
SEE REVISION LIST	15-9-96	
SEE REVISION LIST	15-10-96	
SEE REVISION LIST	15-11-96	
SEE REVISION LIST	15-12-96	
SEE REVISION LIST	15-1-97	
SEE REVISION LIST	15-2-97	
SEE REVISION LIST	15-3-97	
SEE REVISION LIST	15-4-97	
SEE REVISION LIST	15-5-97	
SEE REVISION LIST	15-6-97	
SEE REVISION LIST	15-7-97	
SEE REVISION LIST	15-8-97	
SEE REVISION LIST	15-9-97	
SEE REVISION LIST	15-10-97	
SEE REVISION LIST	15-11-97	
SEE REVISION LIST	15-12-97	
SEE REVISION LIST	15-1-98	
SEE REVISION LIST	15-2-98	
SEE REVISION LIST	15-3-98	
SEE REVISION LIST	15-4-98	
SEE REVISION LIST	15-5-98	
SEE REVISION LIST	15-6-98	
SEE REVISION LIST	15-7-98	
SEE REVISION LIST	15-8-98	
SEE REVISION LIST	15-9-98	
SEE REVISION LIST	15-10-98	
SEE REVISION LIST	15-11-98	
SEE REVISION LIST	15-12-98	
SEE REVISION LIST	15-1-99	
SEE REVISION LIST	15-2-99	
SEE REVISION LIST	15-3-99	
SEE REVISION LIST	15-4-99	
SEE REVISION LIST	15-5-99	
SEE REVISION LIST	15-6-99	
SEE REVISION LIST	15-7-99	
SEE REVISION LIST	15-8-99	
SEE REVISION LIST	15-9-99	
SEE REVISION LIST	15-10-99	
SEE REVISION LIST	15-11-99	
SEE REVISION LIST	15-12-99	
SEE REVISION LIST	15-1-00	
SEE REVISION LIST	15-2-00	
SEE REVISION LIST	15-3-00	
SEE REVISION LIST	15-4-00	
SEE REVISION LIST	15-5-00	
SEE REVISION LIST	15-6-00	
SEE REVISION LIST	15-7-00	
SEE REVISION LIST	15-8-00	
SEE REVISION LIST	15-9-00	
SEE REVISION LIST	15-10-00	
SEE REVISION LIST	15-11-00	
SEE REVISION LIST	15-12-00	
SEE REVISION LIST	15-1-01	
SEE REVISION LIST	15-2-01	
SEE REVISION LIST	15-3-01	
SEE REVISION LIST	15-4-01	
SEE REVISION LIST	15-5-01	
SEE REVISION LIST	15-6-01	
SEE REVISION LIST	15-7-01	
SEE REVISION LIST	15-8-01	
SEE REVISION LIST	15-9-01	
SEE REVISION LIST	15-10-01	
SEE REVISION LIST	15-11-01	
SEE REVISION LIST	15-12-01	
SEE REVISION LIST	15-1-02	
SEE REVISION LIST	15-2-02	
SEE REVISION LIST	15-3-02	
SEE REVISION LIST	15-4-02	
SEE REVISION LIST	15-5-02	
SEE REVISION LIST	15-6-02	
SEE REVISION LIST	15-7-02	
SEE REVISION LIST	15-8-02	
SEE REVISION LIST	15-9-02	
SEE REVISION LIST	15-10-02	
SEE REVISION LIST	15-11-02	
SEE REVISION LIST	15-12-02	
SEE REVISION LIST	15-1-03	
SEE REVISION LIST	15-2-03	
SEE REVISION LIST	15-3-03	
SEE REVISION LIST	15-4-03	
SEE REVISION LIST	15-5-03	
SEE REVISION LIST	15-6-03	
SEE REVISION LIST	15-7-03	
SEE REVISION LIST	15-8-03	
SEE REVISION LIST	15-9-03	
SEE REVISION LIST	15-10-03	
SEE REVISION LIST	15-11-03	
SEE REVISION LIST	15-12-03	
SEE REVISION LIST	15-1-04	
SEE REVISION LIST	15-2-04	
SEE REVISION LIST	15-3-04	
SEE REVISION LIST	15-4-04	
SEE REVISION LIST	15-5-04	
SEE REVISION LIST	15-6-04	
SEE REVISION LIST	15-7-04	
SEE REVISION LIST	15-8-04	
SEE REVISION LIST	15-9-04	
SEE REVISION LIST	15-10-04	
SEE REVISION LIST	15-11-04	
SEE REVISION LIST	15-12-04	
SEE REVISION LIST	15-1-05	
SEE REVISION LIST	15-2-05	
SEE REVISION LIST	15-3-05	
SEE REVISION LIST	15-4-05	
SEE REVISION LIST	15-5-05	
SEE REVISION LIST	15-6-05	
SEE REVISION LIST	15-7-05	
SEE REVISION LIST	15-8-05	
SEE REVISION LIST	15-9-05	
SEE REVISION LIST	15-10-05	
SEE REVISION LIST	15-11-05	
SEE REVISION LIST	15-12-05	
SEE REVISION LIST	15-1-06	
SEE REVISION LIST	15-2-06	
SEE REVISION LIST	15-3-06	
SEE REVISION LIST	15-4-06	
SEE REVISION LIST	15-5-06	
SEE REVISION LIST	15-6-06	
SEE REVISION LIST	15-7-06	
SEE REVISION LIST	15-8-06	
SEE REVISION LIST	15-9-06	
SEE REVISION LIST	15-10-06	
SEE REVISION LIST	15-11-06	
SEE REVISION LIST	15-12-06	
SEE REVISION LIST	15-1-07	
SEE REVISION LIST	15-2-07	
SEE REVISION LIST	15-3-07	
SEE REVISION LIST	15-4-07	
SEE REVISION LIST	15-5-07	
SEE REVISION LIST	15-6-07	
SEE REVISION LIST	15-7-07	
SEE REVISION LIST	15-8-07	
SEE REVISION LIST	15-9-07	
SEE REVISION LIST	15-10-07	
SEE REVISION LIST	15-11-07	
SEE REVISION LIST	15-12-07	
SEE REVISION LIST	15-1-08	
SEE REVISION LIST	15-2-08	
SEE REVISION LIST	15-3-08	
SEE REVISION LIST	15-4-08	
SEE REVISION LIST	15-5-08	
SEE REVISION LIST	15-6-08	
SEE REVISION LIST	15-7-08	
SEE REVISION LIST	15-8-08	
SEE REVISION LIST	15-9-08	
SEE REVISION LIST	15-10-08	
SEE REVISION LIST	15-11-08	
SEE REVISION LIST	15-12-08	
SEE REVISION LIST	15-1-09	
SEE REVISION LIST	15-2-09	
SEE REVISION LIST	15-3-09	
SEE REVISION LIST	15-4-09	
SEE REVISION LIST	15-5-09	
SEE REVISION LIST	15-6-09	
SEE REVISION LIST	15-7-09	
SEE REVISION LIST	15-8-09	
SEE REVISION LIST	15-9-09	
SEE REVISION LIST	15-10-09	
SEE REVISION LIST	15-11-09	
SEE REVISION LIST	15-12-09	
SEE REVISION LIST	15-1-10	
SEE REVISION LIST	15-2-10	
SEE REVISION LIST	15-3-10	
SEE REVISION LIST	15-4-10	
SEE REVISION LIST	15-5-10	
SEE REVISION LIST	15-6-10	
SEE REVISION LIST	15-7-10	
SEE REVISION LIST	15-8-10	
SEE REVISION LIST	15-9-10	
SEE REVISION LIST	15-10-10	
SEE REVISION LIST	15-11-10	
SEE REVISION LIST	15-12-10	
SEE REVISION LIST	15-1-11	
SEE REVISION LIST	15-2-11	
SEE REVISION LIST	15-3-11	
SEE REVISION LIST	15-4-11	
SEE REVISION LIST	15-5-11	
SEE REVISION LIST	15-6-11	
SEE REVISION LIST	15-7-11	
SEE REVISION LIST	15-8-11	
SEE REVISION LIST	15-9-11	
SEE REVISION LIST	15-10-11	
SEE REVISION LIST	15-11-11	
SEE REVISION LIST	15-12-11	
SEE REVISION LIST	15-1-12	
SEE REVISION LIST	15-2-12	
SEE REVISION LIST	15-3-12	
SEE REVISION LIST	15-4-12	
SEE REVISION LIST	15-5-12	
SEE REVISION LIST	15-6-12	
SEE REVISION LIST	15-7-12	
SEE REVISION LIST	15-8-12	
SEE REVISION LIST	15-9-12	
SEE REVISION LIST	15-10-12	
SEE REVISION LIST	15-11-12	
SEE REVISION LIST	15-12-12	
SEE REVISION LIST	15-1-13	
SEE REVISION LIST	15-2-13	
SEE REVISION LIST	15-3-13	
SEE REVISION LIST	15-4-13	
SEE REVISION LIST	15-5-13	
SEE REVISION LIST	15-6-13	
SEE REVISION LIST	15-7-13	
SEE REVISION LIST	15-8-13	
SEE REVISION LIST	15-9-13	
SEE REVISION LIST	15-10-13	
SEE REVISION LIST	15-11-13	
SEE REVISION LIST	15-12-13	
SEE REVISION LIST	15-1-14	
SEE REVISION LIST	15-2-14	
SEE REVISION LIST	15-3-14	
SEE REVISION LIST	15-4-14	
SEE REVISION LIST	15-5-14	
SEE REVISION LIST	15-6-14	
SEE REVISION LIST	15-7-14	
SEE REVISION LIST	15-8-14	
SEE REVISION LIST	15-9-14	
SEE REVISION LIST	15-10-14	
SEE REVISION LIST	15-11-14	
SEE REVISION LIST	15-12-14	
SEE REVISION LIST	15-1-15	
SEE REVISION LIST	15-2-15	
SEE REVISION LIST	15-3-15	
SEE REVISION LIST	15-4-15	
SEE REVISION LIST	15-5-15	
SEE REVISION LIST	15-6-15	
SEE REVISION LIST	15-7-15	
SEE REVISION LIST	15-8-15	
SEE REVISION LIST	15-9-15	
SEE REVISION LIST	15-10-15	
SEE REVISION LIST	15-11-15	
SEE REVISION LIST	15-12-15	
SEE REVISION LIST	15-1-16	
SEE REVISION LIST	15-2-16	
SEE REVISION LIST	15-3-16	
SEE REVISION LIST	15-4-16	
SEE REVISION LIST	15-5-16	
SEE REVISION LIST	15-6-16	
SEE REVISION LIST	15-7-16	
SEE REVISION LIST	15-8-16	
SEE REVISION LIST	15-9-16	
SEE REVISION LIST	15-10-16	
SEE REVISION LIST	15-11-16	
SEE REVISION LIST	15-12-16	
SEE REVISION LIST	15-1-17	
SEE REVISION LIST	15-2-17	
SEE REVISION LIST	15-3-17	
SEE REVISION LIST	15-4-17	
SEE REVISION LIST	15-5-17	
SEE REVISION LIST	15-6-17	
SEE REVISION LIST	15-7-17	
SEE REVISION LIST	15-8-17	
SEE REVISION LIST	15-9-17	
SEE REVISION LIST	15-10-17	
SEE REVISION LIST	15-11-17	
SEE REVISION LIST	15-12-17	
SEE REVISION LIST	15-1-18	
SEE REVISION LIST	15-2-18	
SEE REVISION LIST	15-3-18	
SEE REVISION LIST	15-4-18	
SEE REVISION LIST	15-5-18	
SEE REVISION LIST	15-6-18	
SEE REVISION LIST	15-7-18	
SEE REVISION LIST	15-8-18	
SEE REVISION LIST	15-9-18	
SEE REVISION LIST	15-10-18	
SEE REVISION LIST	15-11-18	
SEE REVISION LIST	15-12-18	
SEE REVISION LIST	15-1-19	
SEE REVISION LIST	15-2-19	
SEE REVISION LIST	15-3-19	
SEE REVISION LIST	15-4-19	
SEE REVISION LIST	15-5-19	
SEE REVISION LIST	15-6-19	
SEE REVISION LIST	15-7-19	
SEE REVISION LIST	15-8-19	
SEE REVISION LIST	15-9-19	
SEE REVISION LIST	15-10-19	
SEE REVISION LIST	15-11-19	
SEE REVISION LIST	15-12-19	
SEE REVISION LIST	15-1-20	
SEE REVISION LIST	15-2-20	
SEE REVISION LIST	15-3-20	
SEE REVISION LIST	15-4-20	
SEE REVISION LIST	15-5-20	
SEE REVISION LIST	15-6-20	
SEE REVISION LIST	15-7-20	
SEE REVISION LIST	15-8-20	
SEE REVISION LIST	15-9-20	
SEE REVISION LIST	15-10-20	
SEE REVISION LIST	15-11-20	
SEE REVISION LIST	15-12-20	
SEE REVISION LIST	15-1-21	
SEE REVISION LIST	15-2-21	
SEE REVISION LIST	15-3-21	
SEE REVISION LIST	15-4-21	
SEE REVISION LIST	15-5-21	
SEE REVISION LIST	15-6-21	
SEE REVISION LIST	15-7-21	
SEE REVISION LIST	15-8-21	
SEE REVISION LIST	15-9-21	
SEE REVISION LIST	15-10-21	
SEE REVISION LIST	15-11-21	
SEE REVISION LIST	15-12-21	
SEE REVISION LIST	15-1-22	
SEE REVISION LIST	15-2-22	
SEE REVISION LIST	15-3-22	
SEE REVISION LIST	15-4-22	
SEE REVISION LIST	15-5-22	
SEE REVISION LIST	15-6-22	
SEE REVISION LIST	15-7-22	
SEE REVISION LIST	15-8-22	
SEE REVISION LIST	15-9-22	
SEE REVISION LIST	15-10-22	
SEE REVISION LIST	15-11-22	
SEE REVISION LIST	15-12-22	
SEE REVISION LIST	15-1-23	
SEE REVISION LIST	15-2-23	
SEE REVISION LIST	15-3-23	
SEE REVISION LIST	15-4-23	
SEE REVISION LIST	15-5-23	
SEE REVISION LIST	15-6-23	
SEE REVISION LIST	15-7-23	
SEE REVISION LIST	15-8-23	
SEE REVISION LIST	15-9-23	
SEE REVISION LIST	15-10-23	
SEE REVISION LIST	15-11-23	
SEE REVISION LIST	15-12-23	
SEE REVISION LIST	15-1-24	
SEE REVISION LIST	15-2-24	
SEE REVISION LIST	15-3-24	
SEE REVISION LIST	15-4-24	
SEE REVISION LIST	15-5-24	
SEE REVISION LIST	15-6-24	
SEE REVISION LIST	15-7-24	
SEE REVISION LIST	15-8-24	
SEE REVISION LIST	15-9-24	
SEE REVISION LIST	15-10-24	
SEE REVISION LIST	15-11-24	
SEE REVISION LIST	15-12-24	
SEE REVISION LIST	15-1-25	
SEE REVISION LIST	15-2-25	
SEE REVISION LIST	15-3-25	
SEE REVISION LIST	15-4-25	
SEE REVISION LIST	15-5-25	
SEE REVISION LIST	15-6-25	
SEE REVISION LIST	15-7-25	
SEE REVISION LIST	15-8-25	
SEE REVISION LIST	15-9-25	
SEE REVISION LIST	15-10-25	
SEE REVISION LIST	15-11-25	
SEE REVISION LIST	15-12-25	
SEE REVISION LIST	15-1-26	
SEE REVISION LIST	15-2-26	
SEE REVISION LIST	15-3-26	
SEE REVISION LIST	15-4-26	
SEE REVISION LIST	15-5-26	
SEE REVISION LIST	15-6-26	
SEE REVISION LIST	15-7-26	
SEE REVISION LIST	15-8-26	
SEE REVISION LIST	15-9-26	
SEE REVISION LIST	15-10-26	
SEE REVISION LIST	15-11-26	
SEE REVISION LIST	15-12-26	
SEE REVISION LIST	15-1-27	
SEE REVISION LIST	15-2-27	
SEE REVISION LIST	15-3-27	
SEE REVISION LIST	15-4-27	
SEE REVISION LIST	15-5-27	
SEE REVISION LIST	15-6-27	
SEE REVISION LIST	15-7-27	
SEE REVISION LIST	15-8-27	
SEE REVISION LIST	15-9-27	
SEE REVISION LIST	15-10-27	
SEE REVISION LIST	15-11-27	
SEE REVISION LIST	15-12-27	
SEE REVISION LIST	15-1-28	
SEE REVISION LIST	15-2-28	
SEE REVISION LIST	15-3-28	
SEE REVISION LIST	15-4-28	
SEE REVISION LIST	15-5-28	
SEE REVISION LIST	15-6-28	
SEE REVISION LIST	15-7-28	
SEE REVISION LIST	15-8-28	
SEE REVISION LIST	15-9-28	
SEE REVISION LIST	15-10-28	
SEE REVISION LIST	15-11-28	
SEE REVISION LIST	15-12-28	
SEE REVISION LIST	15-1-29	
SEE REVISION LIST	15-2-29	
SEE REVISION LIST	15-3-29	
SEE REVISION LIST	15-4-29	
SEE REVISION LIST	15-5-29	
SEE REVISION LIST	15-6-29	
SEE REVISION LIST	15-7-29	
SEE REVISION LIST	15-8-29	
SEE REVISION LIST	15-9-29	
SEE REVISION LIST	15-10-29	
SEE REVISION LIST	15-11-29	
SEE REVISION LIST	15-12-29	
SEE REVISION LIST	15-1-30	
SEE REVISION LIST	15-2-30	
SEE REVISION LIST	15-3-30	
SEE REVISION LIST	15-4-30	
SEE REVISION LIST	15-5-30	
SEE REVISION LIST	15-6-30	
SEE REVISION LIST	15-7-30	
SEE REVISION LIST	15-8-30	
SEE REVISION LIST	15-9-30	
SEE REVISION LIST	15-10-30	
SEE REVISION LIST	15-11-30	
SEE REVISION LIST	15-12-30	
SEE REVISION LIST	15-1-31	
SEE REVISION LIST	15-2-31	
SEE REVISION LIST	15-3-31	
SEE REVISION LIST	15-4-31	
SEE REVISION LIST	15-5-31	
SEE REVISION LIST	15-6-31	
SEE REVISION LIST	15-7-31	
SEE REVISION LIST	15-8-31	
SEE REVISION LIST	15-9-31	
SEE REVISION LIST	15-10-31	
SEE REVISION LIST	15-11-31	
SEE REVISION LIST	15-12-31	
SEE REVISION LIST	15-1-32	
SEE REVISION LIST	15-2-32	
SEE REVISION LIST	15-3-32	
SEE REVIS

DWG NO ELN 2110 | SHEET NO A4C2

V3
CONDENSATE SURGE TANK
3-658M.I/D X 3-144 T-T
(12'-0" I/D X 30'-0" T-T)
M.W.P 15.58 BARS ABS
(213 PSIG)
M.W.T 50°C (122°F)
VESSEL TRIM Nº 8528-1

FUEL GAS FROM FUEL GAS SUPPLY HEADER COS A412

TO HP RELIEF SYSTEM COS A 426

4.3M MIN. FROM LINE 352EC-20"-A

P1A&B
CONDENSATE BOOSTER PUMPS
331 ℓ/MIN AT 5 BARS ΔP
(87.5 USGPM AT 43.5 PSI ΔP)

P2A&B
CONDENSATE RETURN PUMPS
331 ℓ/MIN AT 15.3 BARS ΔP
(87.5 USGPM AT 221.8 PSI ΔP)

P9A&B
SLOPS OIL PUMPS
37.9 ℓ/MIN AT 18.54 BARS ΔP
(10 USGPM AT 274.6 PSI ΔP)

V4
COALESCER
MWP 24.12 BARS ABS
(335 PSIG)
MWT 50°C (122°F)
VESSEL TRIM No 1064 EB-P

V5
OIL SKIMMER
2438M I.D. x 7.925M T-T
(96" I.D. x 26'-0" T-T)
MWP 3.58 BARS ABS.
(35 PSIG)
MWT 50°C (122°F)
VESSEL TRIM No 1066A-P

V33
CONDENSATE STORAGE TANK
CAPACITY : 80M³ (18,700 USG)
MWP : 1.29 BARS ABS (4PSIG)
MWT : 50°C (122°F)
VESSEL TRIM Nº 2808A-P

TO LP VENT SYSTEM COS A 424

P15A&B
CONDENSATE RECYCLE PUMPS
331 ℓ/MIN AT 19 BARS ΔP
(87.5 USGPM AT 275 PSI ΔP)

V29A&B
CONDENSATE PULSATION DAMPENERS

V30A&B
SLOPS OIL PULSATION DAMPENERS

COLD FUEL GAS FROM E5

FLASH GAS TO V6 COS A408

CONDENSATE BURNER

TO LP VENT SYSTEM COS A 424

ELEV. 4M ABOVE UPPER DECK

LOCATE IN FREELY VENTILATED AREA

DRAIN

COLD FUEL GAS HEADER

TO CONDENSATE BURNER COS A419

TO LCV V3-5C & LCV-V3-6D

TO PY-V3-B COS A408

SEE NOTE 2.

HYDROCARBON DUMP HEADER

TO LV-V3-1 COS A408

TO DRAINAGE SYSTEM COS A 428

P1A&B

P2A&B

TO LOW PRESSURE VENT SYSTEM COS A424

TO DRAINAGE SYSTEM COS A 428

2 NOV 1977

AS BUILT

FUEL GAS FROM FUEL GAS SUPPLY HEADER COS A412

CONDENSATE TO/FROM TCP-2 C/S ELN 2168 CACN 1

SEE DETAIL 'A' COS A405

P15A

P15B

CONDENSATE TO SALES GAS LINE

TO FLARE

FOR CONTINUATION SEE SHEET A406

LEAN GLYCOL TO V2C	557EF-3"-G-1	1½" ELECTRIC TRACE
RICH GLYCOL FROM V2C	559EF-2"-G-1	1"
LEAN GLYCOL TO V2B	554EF-3"-G-1	1½" ELECTRIC TRACE
RICH GLYCOL FROM V2B	560EF-2"-G-1	1"
LEAN GLYCOL TO V2A	555EF-3"-G-1	1½" ELECTRIC TRACE
RICH GLYCOL FROM V2A	553EF-2"-G-1	1"
	603EF-2"-G-1	1"
GLYCOL SLOPS HEADER	606EX-2"-G-II	3"-II
	175EB-4"-P	

557 EF-3"-G-1	LEAN GLYCOL FROM P-10A&B	1½"
559 EF-2"-G-1	RICH GLYCOL TO V-14A	1"
554 EF-3"-G-1	LEAN GLYCOL FROM H-1B	1½"
556 EF-2"-G-1	RICH GLYCOL TO H-1B	1"
551 EF-3"-G-1	LEAN GLYCOL FROM H-1A	1½"
553 EF-2"-G-1	RICH GLYCOL TO H-1A	1"
603EF-2"-G-1	GLYCOL INJECTION	1"
606EX-2"-G-II	GLYCOL SLOPS HEADER	3"-II
180EA-3"-P	CONDENSATE SLOPS SUB-HEADER	

FOR CONTINUATION SEE SHEET A440

GLYCOL INJECTION TO FUEL GAS HEAT EXCHANGERS COS A408

GLYCOL INJECTION

FROM FUEL GAS HEADER COS A412

P9A&B

TO DRAINAGE SYSTEM COS A 428

FROM FUEL GAS DRIP POTS & V8A&B COS A414

FROM SLUMP CAISSON V13 COS A429

CONDENSATE SLOPS HEADER

FROM V8 SUMP CAISSON COS ELN 2111-2405

AS BUILT
TO INFORMATION RECEIVED UP TO:

NOTES
1. THESE PI'S ARE TEST GAUGES, NOT TAGGED, AND WILL BE USED FOR SETTING CHOKES. SP SET @ 2 AT START UP.
2. TEE AND RESTRICTION TO BE CLOSE TO PSH-V5-6B
4. SIGNAL FROM PSL-M3-2 TO PSH-M3-2.

ELF-NORGE
FRIGG FIELD

TREATMENT PLATFORM Nº1
JOB 1-40-C2

McDERMOTT – HUDSON
LONDON – ENGLAND

DRAWN	DATE	DWG NO	ELN 2110
CHECKED		SHEET NO	A405
APPROVED		REVISION	00

PROCESS & INSTRUMENT DIAGRAM
CONDENSATE RECOVERY SYSTEM

FOR SIDE NEED THIS SHT

DESIGN	DETAILS	PIPING	ELEC	INS	BY	DATE	REVISIONS
						79 10	SEE REVISION LIST
						79 11	SEE REVISION LIST
						80 1	SEE REVISION LIST
						80 5	SEE REVISION LIST

DESIGN	DETAILS	PIPING	ELEC	INS	BY	DATE	REVISIONS
						77 3	SEE REVISION LIST
						77 5	SEE REVISION LIST
						77 8	SEE REVISION LIST
						77 11	SEE REVISION LIST

DESIGN	DETAILS	PIPING	ELEC	INS	BY	DATE	REVISIONS
						76 12	SEE REVISION LIST
						77 1	SEE REVISION LIST
						77 2	SEE REVISION LIST
						77 3	SEE REVISION LIST

DESIGN	DETAILS	PIPING	ELEC	INS	BY	DATE	REVISIONS
						76 5	SEE REVISION LIST
						76 6	SEE REVISION LIST
						76 7	SEE REVISION LIST
						76 8	SEE REVISION LIST

DESIGN	DETAILS	PIPING	ELEC	INS	BY	DATE	REVISIONS
						76 5	SEE REVISION LIST
						76 6	ISSUED FOR 'AS BUILT'
						77 1	SEE REVISION LIST
						77 2	SEE REVISION LIST

CUSTOMER APPROV

ENGINEERS APPROVAL

DRG NO ELN 2110 | SHEET NO A410

V31 GLYCOL CHARCOAL FILTER — INSULATION: 1" (25MM) CALCIUM SILICATE

P-25 WATER INJECTION PUMP

P14 A & B GLYCOL INJECTION PUMPS — 3785-227 L/h at 160 BAR ΔP (1.0-60 USGPH at 2320 PSI ΔP)

V45 WATER HOLDING TANK

Q1C GLYCOL REGENERATION UNIT — 2.016 x 10⁶ K CAL/HR (8.0 x 10⁶ BTU/HR)

TO LP VENT SYSTEM COS A424

COMMON MALFUNCTION ALARM

FUEL GAS SUPPLY HEADER 776 EA-4"-FG

776 EA-4"-FG FUEL GAS SUPPLY HEADER

COLD FUEL GAS HEADER FROM E3 776EG-4"-FG-II

RE-BOILER SKID

E4C REFLUX CONDENSER

V-16C STRIPPING COLUMN

SHUT DOWN PANEL

HI-C GLYCOL REBOILER (INSUL: CALCIUM SILICATE)

NOTE: MIN STRAIGHT DROP OF 13' FROM THIS POINT

PUMP & SURGE TANK SKID

V17C GLYCOL SURGE TANK INSULATION, CALCIUM SILICATE 50MM (2")

P10 A & B GLYCOL PUMPS INSUL

V19A V19B PULSATION DAMPENERS

V17C

EIC 1&2 GLYCOL HEAT EXCHANGERS INSUL: CALCIUM SILICATE 50MM (2") EX-3"-G

HEATING PAD CONTROL FROM MCC

ELECTRIC HEATING PADS (EXTERNAL)

V14C CONDENSATE SEPARATOR INSUL: CALCIUM SILICATE 50MM (2")

V20C CHARCOAL FILTER

V15C GLYCOL FILTER

SEPARATOR & FILTER SKID

TO LP VENT SYSTEM COS A424

V31

P-25

P14A P14B

VIEW ON VENDOR

NOTE 1 SAMPLE CONN

NOTE 2

NOTE 3

NOTE 4

FOR CONTINUATION SEE SHEET A409

LEAN GLYCOL TO V2C — 1"-I — 558EF-2"-G-1

RICH GLYCOL FROM V2C — 1"-I — 556EF-2"-G-1

LEAN GLYCOL TO V2B — 1½"-I — 554EF-3"-G-1 — ELECTRIC TRACE

RICH GLYCOL FROM V2B — 1"-I — 556EF-2"-G-1

LEAN GLYCOL TO V2A — 1½"-I — 551EF-3"-G-1 — ELECTRIC TRACE

RICH GLYCOL FROM V2A — 1"-I — 553EF-2"-G-1

GLYCOL INJECTION TO E3 — 1"-I — 605EF-2"-G-1

GLYCOL SLOPS HEADER — 3"-D — 605EX-2"-G-II

CONDENSATE SLOPS SUB HEADER — 180EA-3"-G

WATER HOLDING TANK V-45

FROM UTILITY WATER SYSTEM COS A414

FROM PLANT AIR SYSTEM COS A413

FROM INSTRUMENT AIR HEADER 558EX-2"-IA COS A415

PUMP START AUTHORISATION

PUMP STOPPED / PUMP RUN

2 NOV 1977 AS BUILT

AS BUILT TO INFORMATION RECEIVED UP TO OCT 1977

8. ONE SWITCH TO BE LOCATED AT EACH EXIT FROM GLYCOL REBOILER AREA

NOTES

1. THREE 1" BALL VALVES PER UNIT AT SAMPLE CONNECTIONS TO BE FIELD CHANGED TO GLOBE VALVES BY McDERMOTT-HUDSON (APPLIES TO SHEETS A410, A411, A412)
2. SIGNAL FROM PSL-VC-2, PSL-V2C-2.2A, PX-V2C-8

DESIGN	STRUCT	PIPING	ELEC	INS	DY	DATE	REVISIONS
							ISSUED FOR 'AS BUILT'

DESIGN	STRUCT	PIPING	ELEC	INS	DY	DATE	REVISIONS
				14	L.S	5.8.77	SEE REVISION LIST
				13	L.S	2-3-77	SEE REVISION LIST
				12	RS	7-9-76	SEE REVISION LIST
				11	JP	13.5.76	SEE REVISION LIST

DESIGN	STRUCT	PIPING	ELEC	INS	DY	DATE	REVISIONS
				10	AM	6-12-76	SEE REVISION LIST
				9	SH	5-11-75	SEE REVISION LIST
				8	JH	17-7-75	SEE REVISION LIST
				7		10.2.75	INITIAL DRAWN ISSUE REVISION LIST

DESIGNS APPROVED

ELF-NORGE FRIGG FIELD

TREATMENT PLATFORM NO1 JOB 1-40-C2

McDERMOTT – HUDSON LONDON – ENGLAND

DRAWN BY	CHECKED	DATE	DRG NO
J.S. LOI	—	28-2-75	ELN 2110
J. WELDING		SCALE NO. 00	SHEET NO A410

PIPING & INSTRUMENT DIAGRAM REGENERATION UNIT

DWG NO. ELN 2110 | SHEET NO. A411

P13 A&B
GLYCOL FILL PUMPS
113·6 ℓ/m AT 3·08 BARS
(30 USGPM AT 30 PSIG)

V9
GLYCOL STORAGE TANK
140 m³ (37,000 US GALS)
5·486 M (18') DIA CENTRAL SUPPORT
MWP 1·08 BARS (1 PSIG)
MWT 205°C (400°F)
VESSEL TRIM No 580 6X6

Q1B
GLYCOL REGENERATION UNIT
2·016 X 10^4 KCAL/HR (8·0 X 10^4 BTU/HR)

SP@ 218°C
SP@ 399°C
TO LP VENT SYSTEM COS A456
COMMON MALFUNCTION ALARM
FUEL GAS SUPPLY HEADER 778 EA-4"-FG
778 EA-4"-FG FUEL GAS SUPPLY HEADER
FROM HB-G1-1 COS A410
761 EA-3"-FG
780 EA-4"-FG
761 EA-3"-HG-1
RE BOILER SKID
E4B REFLUX CONDENSER
V16B GLYCOL/WATER SEPARATOR
V-16B
SHUT DOWN PANEL
H1B
H1B GLYCOL REBOILER INSUL CALCIUM SILICATE 75MM (3")
SP@ 2.76 BA
577 EX-2"-G
570 EX-2"-G
NOTE 3 MIN STRAIGHT RUN OF 15' FROM THIS POINT
PUMP & SURGE TANK SKID
SAMPLE CONN
V17B GLYCOL SURGE TANK INSUL CALCIUM SILICATE 50MM(2")
P10-C&D GLYCOL PUMPS INSUL
V19-C
V19-D
P10-C
P10-D
V19C&D PULSATION DAMPENERS
NOTE 2
779 EG-4"-G-I
255 ℓ/min
HEATING PAD CONTROL FROM ACC
E18-1 & 2 GLYCOL HEAT EXCHANGERS W SUL CALCIUM SILICATE 50MM(2")
E18-2
E18-1
TO LP VENT SYSTEM COS A424
262 EA-2"-V
776 EG-4"-FG-II
V14B CONDENSATE SEPARATOR INSUL CALCIUM SILICATE 50MM(2")
SP@ 9.65 BA
TO LP VENT SYSTEM COS A472a
630 EA-6"-G
505 EA-2"-V
734 EA-1"-FG
631 EX-3"-G
265 ℓ/min
V20B CHARCOAL FILTER
V15B GLYCOL FILTER
2" STANDPIPE
NOTE 1
SEPARATOR & FILTER SKID
776 EG-4"-FG-II 3"-II COLD FUEL GAS HEADER
COLD FUEL GAS HEADER 776 EG-4"-G-II
LEAN GLYCOL TO V-2B 1½"-I 556 EP-2"-G-I
RICH GLYCOL FROM V-2B 1"-I 556 EP-2"-G-I
LEAN GLYCOL TO V-2A 1½"-I 551 EP-3"-G-I ELECTRIC TRACE
RICH GLYCOL FROM V-2A 1"-I 553 EP-2"-G-I
GLYCOL INJECTION HEADER 1"-I 598 EX-2"-G-I
GLYCOL SLOPS HEADER 3"-II 606 EX-2"-G-II
CONDENSATE SLOPS SUB-HEADER 180 EA-3"-P
GLYCOL FILL HEADER 560 EX-4"-G
GLYCOL DRAIN HEADER 562 EX-4"-G
556 EP-2"-G-I
551 EP-3"-G-I
553 EP-2"-G-I
598 EX-2"-G-I
606 EX-2"-G-II
180 EA-3"-P
560 EX-4"-G
568 EA-4"-G
ELECTRIC TRACE
551 EP-3"-G-I 1½"-I LEAN GLYCOL FROM H-1A
553 EP-2"-G-I 1"-I RICH GLYCOL TO H-1A
598 EX-2"-G-I 1"-I GLYCOL INJECTION HEADER
606 EX-2"-G-II 3"-II GLYCOL SLOPS HEADER
180 EA-3"-P CONDENSATE SLOPS SUB-HEADER
560 EX-4"-G GLYCOL FILL HEADER
562 EX-4"-G GLYCOL DRAIN HEADER
P13A
P13B
V9
TO DRAINAGE SYSTEM COS A428-P
WEST HOSE STN
EAST HOSE STN
CELLAR
AS BUILT
2 NOV 1977
NOTES 1. SEE SHEET A410 NOTE 1
2. SIGNAL FROM PKL-V18-2 PSL-V28-22A, PX-V25-15
AS BUILT TO INFORMATION RECEIVED UP TO OCT 6/77
CUSTOMER APPROVAL

REVISIONS	DATE	APP
14 ESE REVISION LIST	4-8-77	
13 SEE REVISION LIST	5-7-77	
12 SEE REVISION LIST	7-9-77	
11 SEE REVISION LIST	7-9-77	
10 USE REVISION LIST	6-7-77	
9 SEE REVISION LIST	5-11-77	
8 SEE REVISION LIST	6-7-77	
7 NOT DRAWN SEE REVISION LIST	27-2-75	
6 ISSUED FOR "As BUILT"	11-1-77	

ELF-NORGE
FRIGG FIELD
TREATMENT PLATFORM NO1
JOB 1-40-C2 WD13616
McDERMOTT – HUDSON
LONDON — ENGLAND
DRAWN BY A.P.OWLEY | SCALE — | DATE 25-2-75 | DWG NO ELN 2110
DESIGNED BY J.HOLDING | REVISION NO 00 | SHEET NO A411
PIPING & INSTRUMENT DIAGRAM GLYCOL REGENERATION UNIT

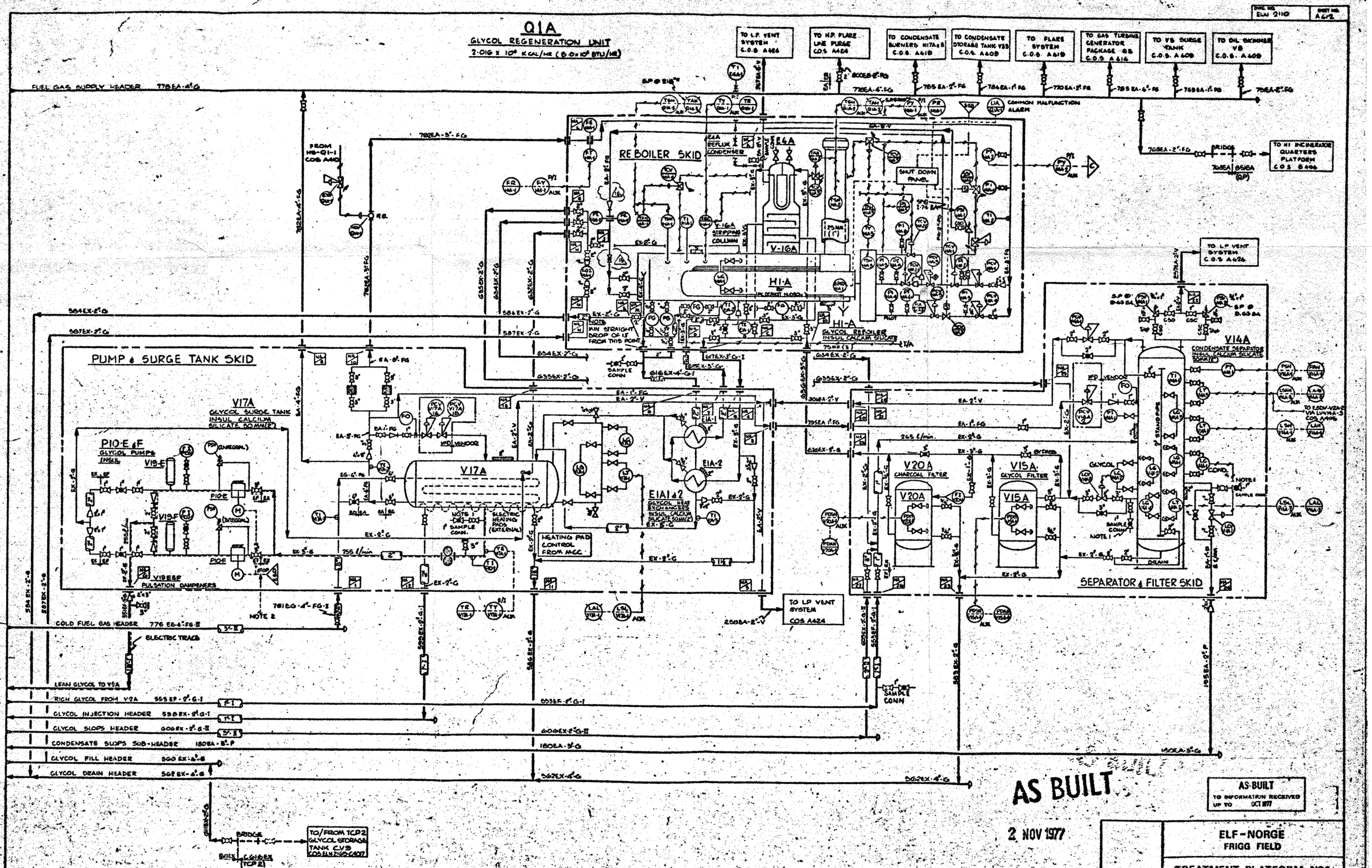

Q1A
GLYCOL REGENERATION UNIT
2·016 x 10⁶ KCAL/HR (8·0 x 10⁶ BTU/HR)
FUEL GAS SUPPLY HEADER 778EA-4"-G
TO L.P. VENT SYSTEM C.O.S. A424
TO H.P. FLARE LINE PURGE C.O.S. A424
TO CONDENSATE BURNERS K17A & B C.O.S. A419
TO CONDENSATE STORAGE TANK V33 C.O.S. A409
TO FLARE SYSTEM C.O.S. A419
TO GAS TURBINE GENERATOR PACKAGE G3 C.O.S. A414
TO V3 SURGE TANK C.O.S. A409
TO OIL SKIMMER V3 C.O.S. A409
COMMON MALFUNCTION ALARM
TO H1 INCINERATOR QUARTERS PLATFORM C.O.S. B404
REBOILER SKID
E4A
V-16A
H1-A
H1-A GLYCOL REBOILER INSUL. CALCIUM SILICATE
SHUT DOWN PANEL
PUMP & SURGE TANK SKID
V17A
GLYCOL SURGE TANK INSUL. CALCIUM SILICATE 50MM(2")
P10-E & F
GLYCOL PUMPS INSUL.
V19-E
V19-F
V19 E&F PULSATION DAMPENERS
E1A1 & 2
GLYCOL HEAT EXCHANGERS INSUL. CALCIUM SILICATE 50MM(2")
HEATING PAD CONTROL FROM MCC
V14A
CONDENSATE SEPARATOR INSUL. CALCIUM SILICATE 50MM(2")
V20A
CHARCOAL FILTER
V15A
GLYCOL FILTER
SEPARATOR & FILTER SKID
TO LP VENT SYSTEM C.O.S. A424
COLD FUEL GAS HEADER 776 EG-4"-FG-II
ELECTRIC TRACE
LEAN GLYCOL TO V2A
RICH GLYCOL FROM V2A 553 EF-2"-G-I
GLYCOL INJECTION HEADER 538 EX-2"-G-I
GLYCOL SLOPS HEADER 606 EX-2"-G-II
CONDENSATE SLOPS SUB-HEADER 180EA-3"-P
GLYCOL FILL HEADER 560 EX-4"-G
GLYCOL DRAIN HEADER 562 EX-4"-G
TO/FROM TCP2 GLYCOL STORAGE TANK CV3 COS ELN 2165-C4017
AS BUILT
2 NOV 1977
AS BUILT
TO INFORMATION RECEIVED UP TO OCT 1977
NOTES 1 SEE SHEET A410, NOTE 1. 2 SIGNAL FROM PXL-V1A-2, PSL-V2A-22A, PX-V2A-5.
CUSTOMER APPROVAL
ELF-NORGE
FRIGG FIELD
TREATMENT PLATFORM No1
JOB 1-40-C2
McDERMOTT - HUDSON
LONDON — ENGLAND
24-2-75
ELN 2110
00
A 412
PIPING & INSTRUMENT DIAGRAM
GLYCOL REGENERATION UNIT

DWG. NO ELN 8110 | SHEET NO. A413 SHT. 1OF2

Q5

AIR COMPRESSOR PACKAGE
8·80 SCM/MIN @ 30 BARG EACH
(300 SCFM AT 150 PSIG EACH)
OPERATING DEW POINT -40°C(-40°F)
2 OFF.

SPQ7-98-A

PAL 05-6 AUX

PSLL 05-5 AUX

SPQ7-98-B

COMBINED COMPRESSOR CONTROL PANEL (CONT. BELOW)

INDIVIDUAL COMPRESSOR GAUGE PANEL

P1 T1 P1 T1 P1

TAH TAH YAL

TO ATMOS PSV 05-3A 1½"x2"

TO ATMOS PSV 05-3B

AIR

LP CYL.

HP CYL.

TCV

PULSATION DAMPENER

TO ATMOS PSV 05-4 1½"

PSL

FS

TO SKID DRAIN

YLAH 05A STOP 05A

COMPRESSOR CRANKSHAFT

TSH

WATER COOLING

WATER PUMP

TO SKID DRAIN

TOFFOM COMPRESSOR LUBE SYSTEM

LUBE OIL PUMP

SKID 'A'

COMBINED COMPRESSOR CONTROL PANEL (CONT ABOVE)

INDIVIDUAL COMPRESSOR GAUGE PANEL

P1 T1 P1 T1 P1

FAL TAH TSH

TO ATMOS PSV 05-3B 1½"x2"

TO ATMOS PSV 05-3A

AIR

L.P CYL

H.P CYL

TCV

PULSATION DAMPENER

TO ATMOS PSV 05-4B 1½"

PSL

FS

TO SKID DRAIN

COMPRESSOR CRANKSHAFT

TSH

WATER COOLING

WATER PUMP

TO SKID DRAIN

TOFFOM COMPRESSOR LUBE SYSTEM

LUBE OIL PUMP

SKID 'B'

AIR RECEIVERS

TO ATMOS PSV 05-4A 1½"x2"

P1

LG

TO SKID DRAIN

TO ATMOS PSV 05-4B 1½"x2"

P1

LG

TO SKID DRAIN

AIR DRIERS

PSV 05-3A

TO ATMOS

DRIER CONTROL PANEL (CONT BELOW)

PSL P1 RO

TO ATMOS

MOISTURE PRE-FILTER

TO SKID DRAIN

DUST FILTER

PSV 05-3B

TO ATMOS

DRIER CONTROL PANEL (CONT ABOVE)

PSL P1 RO

TO ATMOS

MOISTURE PRE-FILTER

TO SKID DRAIN

DUST FILTER

FROM SKID DRAIN SYSTEM 4976A-3"-DP

TO DRAINAGE SYSTEM C.O.S. A429

SPQ7-98-A

PT 05-2 PAL 05-2

PCV 05-1 PC 05-1 PT 05-1

100ELJ-3"-PA PLANT AIR

SPQ7-98-A

PAL 05-3 AUX

PT 05-3

PCV 05-2 PC 05-2 PT 05-4

PCV 05-3 PC 05-3 PT 05-5

5016K-3"-1A INSTRUMENT AIR

5016K-3"-1A

NOTE.: ALL LOCAL BOARD MOUNTED INSTRUMENTS ARE LOCATED ON THE COMBINED COMPRESSOR CONTROL PANEL

AS BUILT

2 NOV 1977

AS BUILT
TO INFORMATION RECEIVED UP TO 5th OCT 1977

ELF-NORGE
FRIGG FIELD

TREATMENT PLATFORM No1
NORTH SEA JOB 1-40-C2 W.D.104 M

McDERMOTT — HUDSON
LONDON — ENGLAND

DRAWN BY	SCALE	DATE	DWG. NO.
J. S. LOI	NONE	11TH JULY 77	ELN 8110
APPROVED BY A. G. MCDONALD		REVISION NO. 00	SHEET NO. A413 SHT. 1OF2

PIPING AND INSTRUMENT DIAGRAM AIR COMPRESSOR PACKAGE

CUSTOMER APPROVAL BY 9-12 DATE 11-12-77

NO.	BY	DATE	REVISIONS
16	JB	15/8/77	ISSUED FOR "AS BUILT"
15	LS	5-8-77	SEE REVISION LIST
12	LS	4-5-77	SEE REVISION LIST
11	JP	7-3-77	SEE REVISION LIST
10	JSY	6-4-77	SEE REVISION LIST
9	JD	23-2-77	SEE REVISION LIST
8	JBL	9-11-76	SEE REVISION LIST
7	JBL	7.76	REDRAWN SEE REVISION LIST

DWG NO ELN 2110 | SHEET NO A4/5 SHT 2 OF 2

1001EU-3"-PA

1034EU-1"-PA → US-4

1035EU-1½"-PA → 1035EU-1"-PA → US-5

1032EU-1"-PA → US-8

1033EU-2"-PA → 1033EU-1½"-PA → 1033EU-1"-PA → US-7

1041EU-1"-PA → TO AIR PUMP P26A COS. A404

1040EU-1"-PA → TO AIR PUMP P26B COS. A404

1045EU-1"-PA → TO AIR PUMP P26C COS. A404

1044EU-1"-PA → TO AIR PUMP P-25

PLANT AIR HEADER

1037EU-1"-PA → US-3

1006EU-2"-PA → BRIDGE → PLANT AIR TO/FROM QUARTERS PLATFORM COS ELN@II-B408

1006EU → 751EU (GP)

1023-1"-PA → US-17

1024EU-1"-PA → US-16

1001EU-3"-PA → BRIDGE → PLANT AIR TO/FROM TCP2 COS ELN2113-C4019

1001EU → C.1001 (TCP 2)

1030EU-1½"-PA → 1030EU-1"-PA → US-10

1035EU-1"-PA → US-1

1022EU-2"-PA → 1021EU-1½"-PA → WORKBENCH AIR

1022EU-1"-PA → WORKBENCH AIR

1022EU-1"-PA → US 20

1022EU-1"-PA → WORKBENCH AIR

2"SCH

1032EU-1"-PA → WORKBENCH AIR

TP1- PLANT AIR HEADER

1025EU-1"-PA → US-15

1026EU-1"-PA → US-13

1024EU-1"-PA → US-16

1007EU-1"-PA → TO GENERATOR BUILDING COS A416

1028EU-1½"-PA → 1028EU-1"-PA → US-9

1029EU-1"-PA → US-12

1031EU-1"-PA → US-18

1011EU-2"-PA → TO FLARE STACK Q6 COS A419

1008EU-8"-PA → MUD PUMP START PANEL COS A418

1005EU-2"-PA → CRANE M8 AIR START

1004EU-6"-PA → MUD AIR COMPRESSOR PACKAGE Q2 COS A417

1001EU-3"-PA

1038EU-2"-PA → 1038EU-1½"-PA → TO INHIBITOR PACKAGE-BY ELF. SEE ELF ENG. SKETCH Nº 4.

1035EU-1"-PA → US-2

1009EU-1"-PA → US-11

1034EU-1"-PA → US-6

1037EU-1"-PA → US-13

1005EU-2"-PA → CRANE M7 AIR START

1008EU-8"-PA → TO AIR START V6646LS V35AB COS. A415

1008EU-8"-PA

INSTRUMENT AIR

951EK-3"-IA

956EK-3"-IA → BRIDGE → INSTRUMENT AIR To/From TCP2 COS ELN2149-C4019

954EK → C1001EK (TCP 2)

951EK-3"-IA

979EK-1"-IA

952EK-2"-IA → BRIDGE → INSTRUMENT AIR To/From QUARTERS PLATFORM COS ELN@II-B408

952EK → 1201EK (GP)

963EK-1"-IA → TO Q8

959EK-1"-IA → TO FLARE GEN PANEL

TO RAMP RUN PANEL

TO V7

TO INSTRUMENT INTERFACE ROOM

955EK-2"-IA → TO M8

TO Q-1A,B & C

976EK-1"-IA

977EK-1"-IA

978EK-1"-IA

953EK-2"-IA

973EK-1"-IA ZONE Q3

974EK-1"-IA ZONE Q1

965EK-1"-IA ZONE Q1

975EK-1"-IA ZONE Q1

973EK-1"-IA ZONE Q4

ZONE Q1

911EK-1½"-IA

ZONE Q1

910EK-2"-IA

ZONE Q1

972EK-1"-IA

955EK-1"-IA → TO CATOL INJECTION PUMPS PHASE 6 PHASE 7 COS A420

957EK-1"-IA → TO M1

954EK-1"-IA ZONE Q2

962EK-1"-IA → TO V6 & 8 C

961EK-1"-IA ZONE Q2

960EK-1"-IA → TO V6 & 8 C

964EK-1"-IA → TO V6 & 8 C

966EK-1"-IA ZONE Q4

912EK-2"-IA

ZONE Q1

953EK-2"-IA

AS BUILT

2 NOV 1977

UTILITY STATION	PLANT AIR	UTILITY WATER	ZONE	
US-1	1035EU-1"-PA	1077EU-1"-UW		
US-2	1036EU-1"-PA	1078EU-1"-UW		
US-3	1037EU-1"-PA	1079EU-1"-UW		
US-4	1034EU-1"-PA	1080EU-1"-UW		
US-5	1035EU-1"-PA	1081EU-1"-UW		
US-6	1034EU-1"-PA	1082EU-1"-UW		
US-7	1033EU-1"-PA	1083EU-1"-UW		
US-8	1032EU-1"-PA	1084EU-1"-UW		
US-9	1031EU-1"-PA	1085EU-1"-UW		
US-10	1030EU-1"-PA	1086EU-1"-UW		
US-11	1029EU-1"-PA	1087EU-1"-UW		
US-12	1028EU-1"-PA	1088EU-1"-UW		
US-13	1027EU-1"-PA	1089EU-1"-UW		
US-14	1026EU-1"-PA	1090EU-1"-UW		
US-15	1025EU-1"-PA	1091EU-1"-UW		
US-16	1024EU-1"-PA	1092EU-1"-UW		
US-17	1023EU-1"-PA	1093EU-1"-UW		
US-18	1031EU-1"-PA	1094EU-1"-UW		
US-19	1020EU-1"-PA	1095EU-1"-UW		
US-20	1022EU-1"-PA	1096EU-1"-UW		

AS BUILT
TO INFORMATION RECEIVED UP TO 2 NOV 1977

REVISIONS	DATE	APP
15 RS 13.9.77 ISSUED FOR 'AS BUILT'		
14 MS 15/9/77 SEE REVISION LIST		
13 RS 21.VII.77 SEE REVISION LIST		
12 RS 1.9.76 SEE REVISION LIST		
11 JSW 6.5.76 SEE REVISION LIST		
10 JSW 4.2.76 APPROVED FOR CONSTRUCTION		
9 SD 2.12.75 SEE REVISION LIST		

CUSTOMER APPROVAL 8-7-76

ELF-NORGE
FRIGG FIELD
TREATMENT PLATFORM Nº1
JOB 1-40-C2 W.D.1041N
NORTH SEA
McDERMOTT — HUDSON
LONDON — ENGLAND

DRAWN	SCALE	DATE	DWG NO
T. McDEAN	NONE	15TH DEC. 75	ELN 2110
DESIGNED BY		SHEET Nº	SHEET NO
DO		2	A4/5 SHT 2 OF 2

PIPING AND INSTRUMENT DIAGRAM
INSTRUMENT AND PLANT AIR HEADERS

DWG NO ELN 2110 | SHEET NO A414

V10 DIESEL BULK STORAGE
CAPACITY 3200M³ (1,000,000 IMP GALS)
6-42mm ø DIA CENTRAL SUPPORT
MWP 1.05 BARS (15 PSIG)
MWT 22°C (71 °F)
VESSEL TEM No 885EA

V22A&B CRANE PEDESTAL

V21 DIESEL FILTER

P8A&B DIESEL PUMPS
CAPACITY 113 l/s at MAT 5.15 BARS
(1800 GPM AT 60 PSIG)

P18A&B DIESEL BOOSTER PUMPS
CAPACITY 137 l/min. AT
6.9 BARS (36 USPM AT 100 PSIG)

V11A&B FIREWATER PUMPS DAY TANKS
CAPACITY 240 USGAL EACH
VESSEL TRIM No 888EA (V11A)
VESSEL TRIM No 889EA (V11B)

V12A&B MUD PUMPS DAY TANKS
CAPACITY 2618 (690 USG) EACH
VESSEL TRIM No 894EA (V12A&B)

P19A&B MAIN FUEL PUMPS
CAPACITY 72 l/min AT 100 BARS
(19 USGPM AT 1450 PSIG)

V18A&B&C FUEL GAS DRY POTS

Q3 GAS TURBINE GENERATOR PACKAGE
3.5 MV A EACH

Q4 FIRE DETECTION & EXTINGUISHING SYSTEM (HALON TYPE)

NOTES:-
1. ALL FIRST BLOCK VALVES FROM EACH PLATFORM HEADER TO DIESEL USERS ARE TO BE LOCATED AS A VALVE MANIFOLD BY THEIR OWN PLATFORM LOCAL PANEL
2. FOR CONTINUATION SEE DRAWING ELN 2169 - C4020
3. THIS SPRING RETURN VALVE SHALL BE LOCATED AT IT'S TANK, AND WILL BE CAPABLE OF BEING OPERATED OUT SIDE FIRE PUMP ROOM
4. THIS SPRING RETURN VALVE SHALL BE LOCATED AT ITS TANK AND WILL BE CAPABLE OF BEING REMOTELY OPERATED
5. A SPRING RETURN VALVE SHALL BE LOCATED IN THE DIESEL SUPPLY LINE FROM THE DAY TANK TO THE ENGINE. IT SHALL BE OPERABLE FROM INSIDE THE CRANE CABIN
6. LOCATE TUNDISH OUTSIDE PUMP HOUSE
7. LOCATE TUNDISH INSIDE PUMP HOUSE
8. ONE SWITCH TO BE LOCATED AT EACH EXIST FROM TURBINE HALL

AS BUILT

AS BUILT TO INFORMATION RECEIVED UP TO OCT 1977

2 NOV 1977

CUSTOMER APPROVAL

ELF - NORGE
FRIGG FIELD

TREATMENT PLATFORM No 1
JOB 1-40-C2

McDERMOTT - HUDSON
LONDON - ENGLAND

DWG NO ELN 2110 | SHEET NO A414

UTILITY FLOWSHEET
DIESEL AND GAS TURBINE GENERATION SYSTEMS

DWG NO ELN 2110 | SHEET NO. A415

P7
WASHDOWN PUMP
1892 l/m AT 9·65 BARS
(500 USGPM AT 128 PSIG)
AT PUMP HEAD

V35A&B
AIR START VESSEL
1372 mm O/D X 4318 TOTAL LENGTH
(54" O/D X 170" TOTAL LENGTH)
DESIGN PRESSURE 11·34 BARS ABS (150 PSIG)
VOLUME 6 M³ (212 FT³)
VESSEL V35A TRIM N° 1042 EU
VESSEL V35B TRIM N° 1043 EU

P6A&B
FIREWATER PUMPS
7570 l/m AT 9·65 BARS
(2,000 USGPM AT 125 PSIG)
AT EACH PUMP HEAD

M25A&B
NITROGEN START SYSTEM
6 X K NITROGEN BOTTLES
0·229 M Ø X 1·422 M HIGH PER BOTTLE
(9" Ø X 56" HIGH PER BOTTLE)
CAPACITY: 7·07 SCM (278 SCF) EACH @ 173 BARS ABS (2500 PSIG)

TCP-2 FIREWATER PUMP PNEUMATIC START RELAY PANEL

TCP-2 FIREWATER PUMP CONTROL PANELS COS 2169 C4021

Q.P. FIREWATER PUMP CONTROL PANEL COS 2111 B 5915

QUARTERS PLATFORM CONTROL ROOM
START ONLY

FIRE ALARM BUTTONS ONE AT EACH FIRE MONITOR AND AT STRATEGIC PLACES

ESD CABINET FIREWATER PUMP START SYSTEM

FROM FIRE DETECTION OR GAS DETECTION
OR
PSL-P6-5
PSL-P6-6
PSL-P6-7
PSL-P6-8
PSL-P6-9
PSL-P6-10
PSL-P6-11
PSL-P6-12
PSL-P6-13
PSL-P6-14
PSL-P6-17
PSL-P6-18
PSL-P6-19
PSL-P6-20
COS A416 SHT'S 1&2

FIRE PUMP START PNEUMATIC RELAY PANEL

INDIVIDUAL PNEUMATIC INPUTS FROM DELUGE COS A416 SHEETS 1&2

VOLUME TANK

105EL-6"-UW

115EL-10"-FW

TO WASHDOWN WATER MAIN COS A416 SHT 1 OF 2

TO FIREWATER MAIN COS A416 SHT. 1 OF 2

TO FIREWATER MAIN COS A416 SHT 1 OF 2

1152EL-10"-FW

1156EL-10"-FW

273 EA-10"-V-1 AIR FROM ATMOS

274 EA-10"-V-1 AIR FROM ATMOS

OPEN DUMP TO SEA

FROM DIESEL OIL DAY TANK V11A COS A414

FROM DIESEL OIL DAY TANK V11B COS A414

PANEL
BATTERY CHARGER
BATTERY
AIR START SYSTEM
DIESEL

REMOTE ONE AT EACH HOSE REEL

LAT 000
ACTUAL WATER LEVEL
-3.000m (-9'-10")
PUMP SUCTION ELEVATION
-16.463m (-54'-0")

P7

P6A
LAT 000
ACTUAL WATER LEVEL
-3.000m (-9'-10")
PUMP SUCTION ELEVATION
-18.468m (-60'-7")

P6B
LAT 000
ACTUAL WATER LEVEL
-3.000m (-9'-10")
PUMP SUCTION ELEVATION
-18.468m (-60'-7")

TO SEA

1042EU-15"-PA

1043EU-15"-PA

1009EU-1"-PA

FROM PLANT AIR HEADER 1001EU-3"-PA COS A413 SHT 2

FROM PLANT AIR HEADER 1001EU-3"-PA COS A413 SHT 2

V35A

V35B

TEMPORARY N₂ START

M25A

M25B

LOCATE IN FIREPUMP ROOM

2 NOV 1977

AS BUILT

NOTES
1) LOCATE PUMPS AT OPPOSITE ENDS OF PLATFORM
2) THESE VALVES TO BE LOCATED OUTSIDE FIREPUMP ROOMS

AS BUILT
INFORMATION RECEIVED OCT 81

THIS SIDE REV'D THIS SHT.	DESIGN	STRUCT	PIPING	ELEC	INS	BY	DATE	REVISIONS	DATE	APP
			11/4	7/8	12	TD	23-7-75	SEE REVISION LIST	4/5/75	DJ
			11/4	7/8	11	TD	8-9-75	SEE REVISION LIST	18/8/75	DJ
			1/4	7/8	10	DL	10-9-75	SEE REVISION LIST	26/9/75	DJ
			1-1	7/8	9	DW	19-12-75	SEE REVISION LIST	30/12/75	DJ

DESIGN	STRUCT	PIPING	ELEC	INS	BY	DATE	REVISIONS	DATE	APP
		1/4	7/8	8	GM	5-11-75	SEE REVISION LIST	14/11/75	DJ
		1/4	7/8	7	MB	8-7-75	SEE REVISION LIST	14/11/75	DJ
		1/4	7/8	6	JGW	23-7-75	SEE REVISION LIST	14/11/75	DJ
		1/4	7/8	5	JGW	10-7-75	SEE REVISION LIST	14/11/75	DJ

DESIGN	STRUCT	PIPING	ELEC	INS	BY	DATE	REVISIONS	DATE	APP
		1/4	7/8	4	DW	24-7-74	SEE REVISION LIST	6-8-74	DJ
		1/4	7/8	3	JGW	12-8-74	SEE REVISION LIST	6-8-74	DJ
		1/4	7/8	2	MS	4/9/74	ISO 1 & 2 FOR "AS BUILT"	27/9/74	DJ
		1/4	7/8	1	MS	4/9/74	SEE REVISION LIST	27/9/74	DJ

CUSTOMER APP'D

ENGINEER APPROVAL

ELF-NORGE
FRIGG FIELD

TREATMENT PLATFORM N°1
JOB 1-40-C2. WP 2410

McDERMOTT-HUDSON
LONDON — ENGLAND

SCALE	DATE	DWG TYP
—	30TH NOV 1976	ELN 2110
	DWG NO	SHEET NO
	00	A415

UTILITY FLOWSHEET
FIREWATER PUMPS

A

DWG NO. ELN2110 | SHEET NO. A416 SHT 1 OF 2

FROM FIREPUMP PGA COS A415

EPOXY RESIN LINED FLANGED LENGTH (ON BRIDGE ONLY)

1151EL-10"-FW

1052EL-4"-UW WASHDOWN WATER RING MAIN

1160EL-12"-FW FIREWATER RING MAIN

1151EL-10"-FW FROM FIREPUMP PGA

1052EL-4"-UW

1160EL-12"-FW

1254EL-12"-FW

1254EL-2"-FW

1254EL-6"-FW

1254EL-3"-FW

1254EL-1"-FW

1254EL-4"-FW

1254EL-5"-FW

1254EL-8"-FW

1254EL-7"-FW

1254EL-9"-FW

1254EL-11"-FW

1254EL-10"-FW

1254EL-12"-FW

1254EL-13"-FW

1254EL-14"-FW

1254EL-15"-FW

1254EL-16"-FW

1254EL-17"-FW

1254EL-18"-FW

1254EL-19"-FW

1254EL-20"-FW

1254EL-21"-FW

1254EL-22"-FW

1254EL-23"-FW

1254EL-24"-FW

1254EL-25"-FW

1254EL-26"-FW

1254EL-27"-FW

1254EL-28"-FW

1254EL-29"-FW

1254EL-30"-FW

1254EL-31"-FW

1254EL-32"-FW

1254EL-33"-FW

1254EL-34"-FW

1254EL-35"-FW

1254EL-36"-FW

1254EL-37"-FW

1254EL-38"-FW

1254EL-39"-FW

1254EL-40"-FW

1254EL-41"-FW

1254EL-42"-FW

1254EL-43"-FW

1254EL-44"-FW

1254EL-45"-FW

1254EL-46"-FW

1254EL-47"-FW

1254EL-48"-FW

1254EL-49"-FW

1254EL-50"-FW

1254EL-51"-FW

DWG NO ELN 2110 | SHEET NO A416 SHT 2 OF 2

FROM FIRE PUMP PGA 1151EL-10'-FW

WASHDOWN RINGMAIN 1052EL-4"-UW

FIREWATER RINGMAIN 1160EL-12"-FW

1151EL-10"-FW

1052EL-4"-UW

FM-7 PIG RECIVERS UPPER DECK WEST

FM-1 CONDENSATE SURGE TANK LOWER DECK WEST

FM-3 DIESEL TANKS CELLAR DECK NORTH WEST

1228EL-8"-FW

1228EL-4"-FW

1226EL-4"-FW

1227EL-4"-FW

FROM FIRE PUMP PGA 1151EL-10"-FW

1102EL-8"-UW

TO FUTURE TOM COMPRESSORS ELN 2110 TP1

1103EL-2"-UW

1104EL-2"-UW

ZONE 13 CELLAR DECK

M4 | M5 RECEIVER P & SPRINKLERS
ZONE 2L
10.2 L/m/m² (0.25 USGPM/FT²)
M4 = 456 L/m (123 USGPM)
M5 = 203 L/m (75 USGPM)
TOTAL: 733 L/m (198 USGPM)

V4 COALESCER SPRINKLERS
ZONE 04L
10.2 L/m/m² = 227 L/m
(0.25 USGPM/FT² 60 USGPM)

V39 CONDENSATE STORAGE SPRINKLERS
ZONE 01 UPPER
10.2 L/m/m² = 538 L/m
(0.25 USGPM/FT² = 142 USGPM)

M3 RECEIVER PIG SPRINKLER
10.2 L/m/m² = 665 L/m
(0.25 USGPM/FT² = 180 USGPM)

1179EL-6"-FW

1176EL-4"-FW

1195EL-4"-FW

1196EL-2"-FW

1196EL-11½"-FW

1193EL-11½"-FW

1260EL-11½"-FW

1259EL-11½"-FW

1258EL-4"-FW

1256EL-12"-F

1256EL-12"-FW

1256EL-2"-FW

1256EL-4"-FW

1196EL-11½"-FW

1185EL-3"-FW

1180EL-3"-FW

1169EL-11½"-FW

1167EL-11½"-FW

1165EL-11½"-FW

1170EL-3"-FW

1168EL-3"-FW

1166EL-3"-FW

1169EL-8"-FW

1170EL-4"-FW

1168EL-4"-FW

1166EL-4"-FW

1169EL-8"-FW

1170EL-8"-FW

1168EL-8"-FW

1166EL-8"-FW

1200EL-8"/11½"-FW

1200EL-8"/11½"-FW

1273EL-4"-FW

1273EL-12"-FW

1272EL-6"-FW

1272EL-12"-FW

1138EL-2"-FW

1273EL-2"-FW

1257EL-3"-FW

1257EL-4"-FW

1259EL-4"-FW

1258EL-4"-FW

1256EL-6"-FW

1256EL-12"-FW

1256EL-4"-FW

1256EL-2"-FW

1255EL-4"-FW

1255EL-12"-FW

1255EL-6"-FW

1255EL-2"-FW

1254EL-4"-FW

1254EL-12"-FW

1254EL-6"-FW

1254EL-2"-FW

1253EL-4"-FW

1253EL-12"-FW

1253EL-6"-FW

1253EL-2"-FW

1252EL-4"-FW

1252EL-12"-FW

1252EL-6"-FW

1252EL-2"-FW

1251EL-4"-FW

1251EL-12"-FW

1251EL-6"-FW

1251EL-2"-FW

1250EL-4"-FW

1250EL-12"-FW

1250EL-6"-FW

1250EL-2"-FW

1249EL-4"-FW

1249EL-12"-FW

1249EL-6"-FW

1249EL-2"-FW

1248EL-4"-FW

1248EL-12"-FW

1248EL-6"-FW

1248EL-2"-FW

1247EL-4"-FW

1247EL-12"-FW

1247EL-6"-FW

1247EL-2"-FW

1246EL-4"-FW

1246EL-12"-FW

1246EL-6"-FW

DWG NO. ELN 2110 | SHEET NO. A417

V25A
MUD BULK HOPPER
CAPACITY : 28·32M³ (10³CF)
MWP : 4·18 BARS (45PSIG)
MWT : 32°C (90°F)

V25B
MUD & CEMENT BULK HOPPER
CAPACITY : 21·52M³ (10³CF)
MWP : 4·18 BARS (45PSIG)
MWT : 32°C (90°F)

Q2
MUD AIR COMPRESSOR PACKAGE
11·33 6CMM AT 5·77 BARS
(400 6CFM AT 40PSIG)

V27
CEMENT SURGE TANK
CAPACITY : 2M³ (70CF)
MWP : 4·18 BARS (45PSIG)
MWT : 32°C (90°F)

V27-1
CEMENT MIXER

V26A
MUD SURGE TANK
CAPACITY : 2M³ (70CF)
MWP : 4·18 BARS (45PSIG)
MWT : 32°C (90°F)

V26A
MUD MIXER

V26B
MUD SURGE TANK
CAPACITY : 2M³ (70CF)
MWP : 4·18 BARS (45PSIG)
MWT : 32°C (90°F)

V26B
MUDMIXER

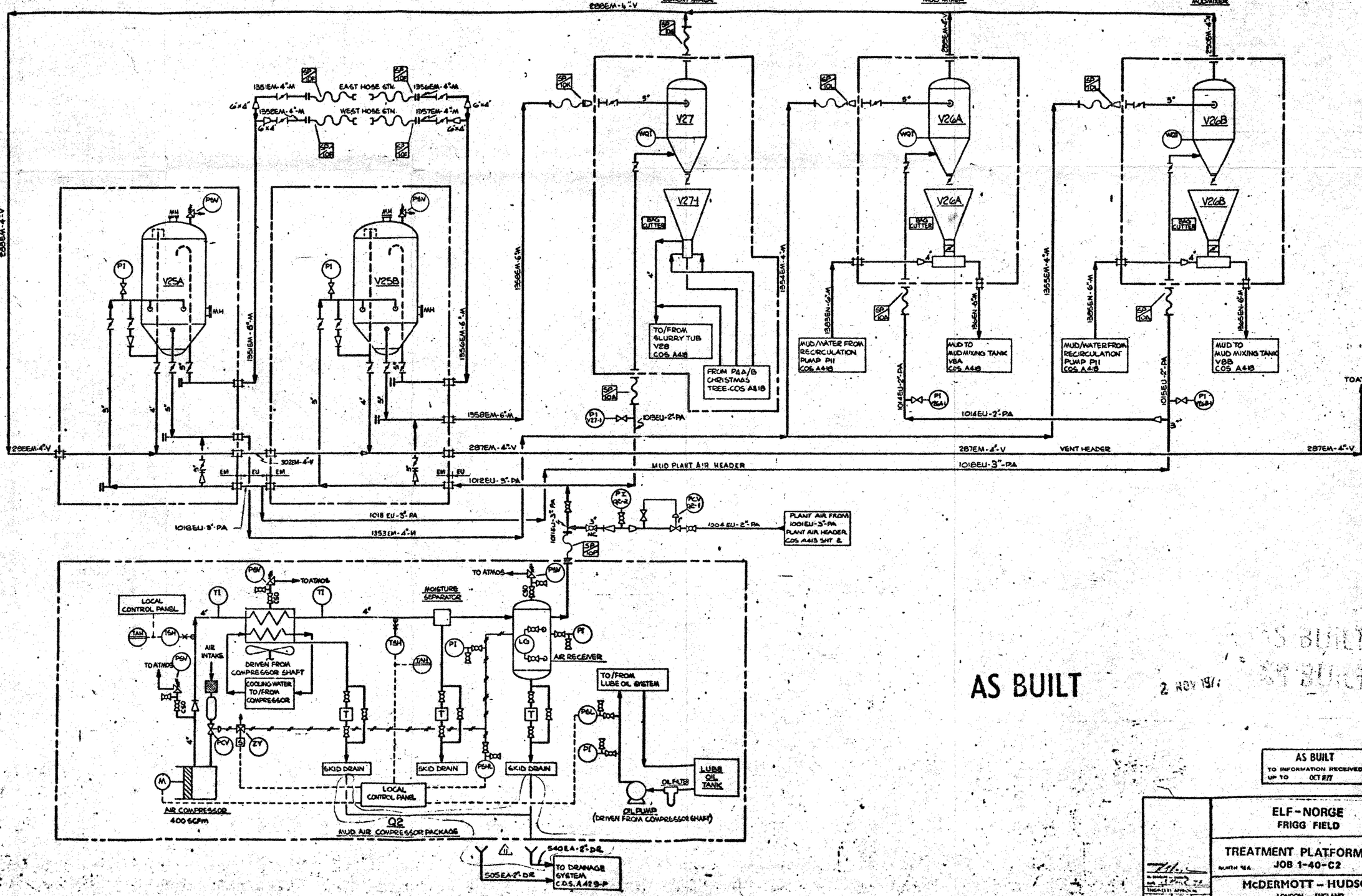

AS BUILT
2 NOV 19/7

AS BUILT
TO INFORMATION RECEIVED UP TO OCT 77

| | | |

DWG NO ELN 2110 | SHEET NO A418

P5
MUD WATER PUMP
300 M³/HR AT 10·35 BARS AT IMPELLER
(1320 USGPM AT 150 PSIG AT IMPELLER)

V28
SLURRY TUB
CAPACITY : 27 ℓ (7 USGAL)

P11
RECIRCULATING MUD PUMP
681.5 ℓ/MN AT 5·52 BARS
(1800 USGPM AT 45 PSIG)

P4A
HP MUD PUMP PACKAGE
318 ℓ/MIN AT 310 BARS TO 314 ℓ/MIN AT 165 BARS
(84 USGPM AT 4500 PSIG TO 82·2 USGPM AT 2400 PSIG

P4B
HP MUD PUMP PACKAGE
318 ℓ/MIN AT 345 BARS TO 1319 ℓ/MIN AT 103 BARS
(84 USGPM AT 5000 PSIG TO 349 USGPM AT 1500 PSIG)

V8A
MUD MIXING TANK
CAPACITY : 50 M³ (15000 US GAL)
MWP : ATMOS
MWT : 16°C (61°F)

M10A&B
MUD PIG LAUNCHERS
A-VESSEL TRIM Nº 1387 EO-M
B-VESSEL TRIM Nº 1392 EO-M

V8B
MUD MIXING TANK
CAPACITY : 50 M³ (15000 US GAL)
MWP : ATMOS
MWT : 16°C (61°F)

M11A,B,C & D.
MUD AGITATORS

NOTES
1. VALVE TO BE BLIND FLANGED ON REMOVAL OF TEMPORARY LINE
2. FOR TEMPORARY HOOK-UP OF M10B & PIPING FOR USE WITH 3 GAS FROM DP2 VIA TCP2, SEE P&ID Nº ELN 2169 SHT C4049

MUD PACKAGE LOCAL PANEL
P1 P91
LAT.000
ACTUAL WATER LEVEL - 3·000M (-9'-10")
PUMP SUCTION ELEVATION -15·316M (-50'-11")
P5
1451EL-8"-SW
6EA WATER FILL MIX
1446EL-8"-SW
1459EL-2"-SW
1459EL-2"-SW
1380EN-8"-M
1451EL-8"-SW
1380EN-8"-M
1383EN-8"-M
1454EL-4"-SW
1455EN-4"-SW
1383EO-6"-M
MUD/WATER TO MUD SURGE TANK V26A COS A417
MUD FROM MUD SURGE TANK V26A COS A417
1385EN-8"-M
1456EL-4"-SW
1457EN-4"-SW
1385EO-6"-M
MUD/WATER TO MUD SURGE TANK V26B COS A417
MUD FROM MUD SURGE TANK V26B COS A417
1367EN-4"-M
1367EN-4"-M
1364EN-6"-M
1456EL-4"-SW
1369EN-2"-M
1370EN-2"-M
PSE V8-1
SP@9 98 BA
WITHIN EASY SIGHT
1361EN-6"-M
1371EN-2"-M
1372EN-2"-M
1366EN-6"-M
1456EL-4"-SW
1373EN-2"-M
1374EN-2"-M
1365EN-6"-M
1375EN-2"-M
1376EN-2"-M
M11A
V8A
M11B
M11C
V8B
M11D
1367EO-4"-M
EN EO
1397EO-4"-M
EL EN
1393EN-8"-M
8"x4"
1393EN-4"-M
1394EN-8"-M
1399EN-4"-M
1458EL-6"-SW
MUD MIX
EL EN
1379EN-8"-M
P11
P11
1409EL-2"-SW
1459EL-2"-SW
COS A429
1395EO-4"-M
1409EL-2"-SW
1459EL-2"-SW
1379EN-8"-M
EL EN
EL EN
1409EL-2"-SW
EL EN
1409EN-2"-SW
2"x 1½" (TYPICAL)
1409EN-2"-SW
5018N-6"-DR
5018N-6"-DR
5018N-12"-DR
DRAINS HEADER
DO NOT POCKET
1386EF-8"-P
SEE NOTE 1
1395EO-4"-M
EO EF
EO EN
1399EN-4"-M
EN EO
1399EO-4"-M
1393EO-8"-M
C50 EN-V
TO HP RELIEF SYSTEM COS A424
PSV M01
VENT TO DRAIN COS A429
EO EC
791EN-2"-V
EO EN
M10A
FULL BORE
1388EO-8"-M
FLOW TEE
WET GAS TO HV-M2-1 COS A404
ZA M01
ZS M01
SD 2
EO 5155AE
MUD TO DP-1, GAS FROM DP-1
OPEN DITCH AT EL 22·500
1397EO-4"-M
4"
DISPLACEMENT TANK
5116EA-6"-DR
TO DRAINAGE SYSTEM COS. A429-P
BJ 2x3x11"
MUD MIX 2"
TO ATMOS
5126EA-14"-P
PSV
P1
TO CEMENT MIXER V27-1 COS A417
MANUAL DIESEL FILL
CONN FOR CLEANING GUN
AIR START HEADER
AIR BOTTLES
SD 100EN-6"-M
6"x4"
PLANT AIR FROM PLANT AIR H/R COS A413
Z-1
Z-1
COMBUSTION AIR FROM ATMOS.
5116EN-6"-V
C.F. V.F.
DIESEL OIL FROM DAY TANK V12A COS A414
DIESEL
F4A
COMBUSTION AIR FROM ATMOS.
C.F. V.F.
DIESEL OIL FROM DAY TANK V12B COS A414
DIESEL
P4B
TO/FROM HYDRAULIC DRIVEN PUMP
HYDRAULIC OIL TANK
HYDRAULIC OIL PUMP (DRIVEN FROM SHAFT OF P4B)
CEMENT MIX FROM MIXER V27-1 COS A417
EA-43
V28
EN-V
292EN-2"-V
VENT TO DRAIN COS A429-P
1390EO CI55EO
M10B
FULL BORE
1391EO-8"-M
FLOW TEE
1389EO-8"-M
TCP2
BRIDGE
ZA M02
ZS M02
MUD TO DP 2 VIA TCP2 COS ELN 2169-C4058
504EN-2"-DR
MUD TO DRAIN COS A429-P
AS BUILT
TO INFORMATION RECEIVED UP TO OCT 1977
NOV 1977
AS BUILT

ISSUE	STATUS	PURPOSE	DATE	NO	BY	DATE	REVISIONS
				9	JP	7-9-75	SEE REVISION LIST
				8	JD	7-5-75	SEE REVISION LIST
				7	JSL	23-4-75	SEE REVISION LIST
				6	JSL	5-11-74	SEE REVISION LIST
				5	JSL	9-7-75	SEE REVISION LIST
				4	SAW	6-8-74	SEE REVISION LIST
				3	JSL	5-0-74	SEE REVISION LIST
				2	MJD	28-8-74	REVISED AS SEE REVISION LIST
				1			ISSUED FOR 'AS BUILT'
				0		5-7-74	SEE REVISION LIST

ELF-NORGE
FRIGG FIELD
TREATMENT PLATFORM Nº1
NORTH SEA JOB 1-40-C2
McDERMOTT - HUDSON
LONDON - ENGLAND
DRAWN M. CEACON | SCALE NONE | DATE 28-AUG-74 | DWG NO ELN 2110 | SHEET NO 00 | A418
UTILITY FLOWSHEET - MUD SYSTEM

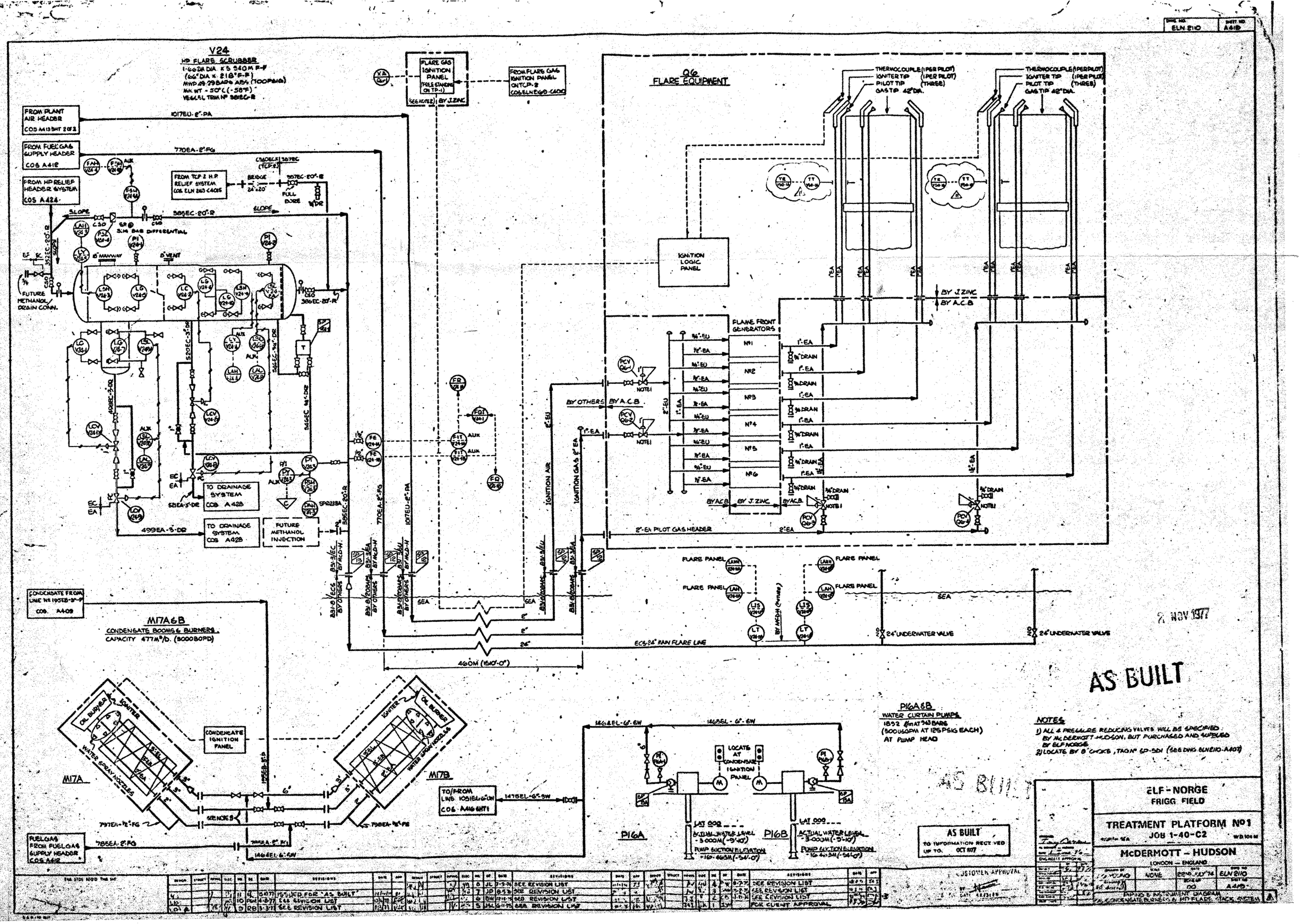

V24
HP FLARE SCRUBBER
1-662M DIA. X 5.540M F-F
(66" DIA X 218" F-F)
MWP 49.79 BARS ABS (700PSIG)
MIN. WT -50°C (-58°F)
VESSEL TRIM Nº 3812C-R
FROM PLANT AIR HEADER COS A413 SHT 2 OF 2
FROM FUEL GAS SUPPLY HEADER COS A412
FROM HP RELIEF HEADER SYSTEM COS A424
FROM TCP-2 H.P. RELIEF SYSTEM COS ELN 2163 C4015
FLARE GAS IGNITION PANEL (FREE STANDING ON TP-1)
FROM FLARE GAS IGNITION PANEL ON TCP-2 COS ELN 2169-C4010
Q6
FLARE EQUIPMENT
THERMOCOUPLE (1 PER PILOT)
IGNITER TIP (1 PER PILOT)
PILOT TIP (THREE)
GAS TIP 42" DIA.
IGNITION LOGIC PANEL
FLAME FRONT GENERATORS
BY J. ZINC
BY A.C.B.
BY OTHERS
2"-EA PILOT GAS HEADER
FUTURE METHANOL DRAIN CONN.
TO DRAINAGE SYSTEM COS A428
FUTURE METHANOL INJECTION
IGNITION AIR
IGNITION GAS
FLARE PANEL
24" UNDERWATER VALVE
ECS-24" MAIN FLARE LINE
460M (1510'-0")
CONDENSATE FROM LINE Nº 105EB-3"-P COS. A409
M17A&B
CONDENSATE BOOMS & BURNERS
CAPACITY 477M³/D. (3000BOPD)
M17A
M17B
OIL BURNER
IGNITER
WATER SPRAY NOZZLES
CONDENSATE IGNITION PANEL
TO/FROM LINE 105EL-6"-UN COS A416 SHT 1
FUEL GAS FROM FUEL GAS SUPPLY HEADER COS A412
P16A
P16B
LOCATE AT CONDENSATE IGNITION PANEL
LAT 000
ACTUAL WATER LEVEL -3.000M (-9'-10")
PUMP SUCTION ELEVATION -16.463M (-54'-0")
P16A&B
WATER CURTAIN PUMPS
1892 l/m AT 943 BARS
(500 USGPM AT 125 PSIG EACH)
AT PUMP HEAD
AS BUILT
NOTES
1) ALL 4 PRESSURE REDUCING VALVES WILL BE SPECIFIED BY McDERMOTT-HUDSON, BUT PURCHASED AND SUPPLIED BY ELF NORGE
2) LOCATE BY 8" CHOKE, TAG Nº SP-5D1 (SEE DWG ELN2110-A407)
AS BUILT
TO INFORMATION RECEIVED UP TO OCT 1977
ELF-NORGE
FRIGG FIELD
TREATMENT PLATFORM Nº1
JOB 1-40-C2
McDERMOTT - HUDSON
LONDON - ENGLAND
PIPING & INSTRUMENT DIAGRAM
CONDENSATE BURNERS & HP FLARE STACK SYSTEM
ELN 2110
A419

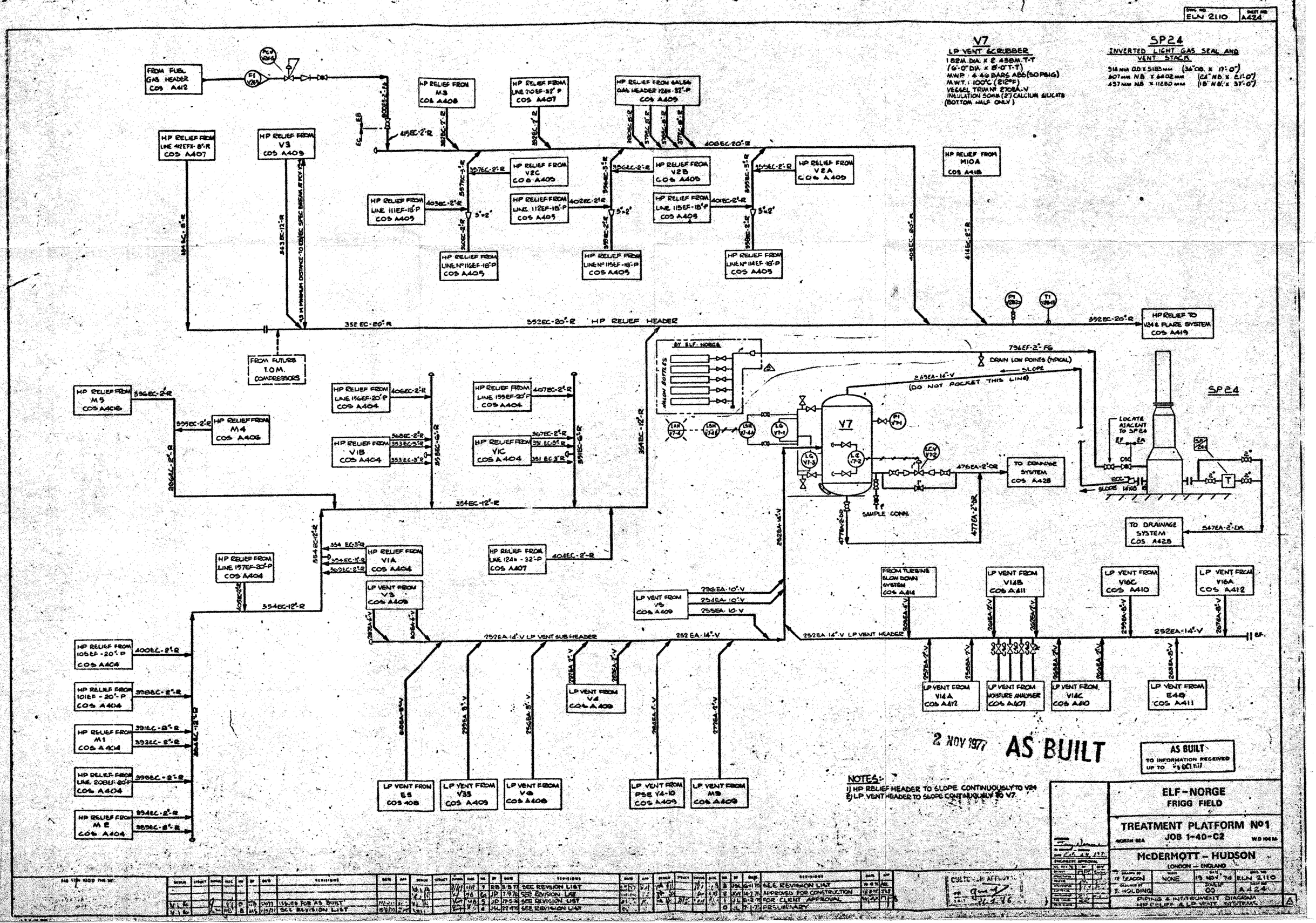

DWG NO. ELN 2110
SHEET NO. A424
V7
LP VENT SCRUBBER
1.82M DIA. x 2.438M T-T
(6'-0" DIA. x 8'-0" T-T)
MWP: 4.46 BARS ABS (50 PSIG)
MWT: 100°C (212°F)
VESSEL TRIM Nº 270EA-V
INSULATION 50MM (2") CALCIUM SILICATE
(BOTTOM HALF ONLY)
SP24
INVERTED LIGHT GAS SEAL AND VENT STACK
914 MM OD x 5183 MM (36" OD. x 17'-0")
607 MM NB x 6402 MM (24" NB x 21'-0")
437 MM NB x 11280 MM (18" NB x 37'-0")
FROM FUEL GAS HEADER COS A412
HP RELIEF FROM M3 COS A408
HP RELIEF FROM LINE 210EF-32" P COS A407
HP RELIEF FROM SALES GAS HEADER 124x-32"-P COS A405
HP RELIEF FROM LINE 412EFX-8"-R COS A407
HP RELIEF FROM V3 COS A409
HP RELIEF FROM V2C COS A405
HP RELIEF FROM V2B COS A405
HP RELIEF FROM V2A COS A405
HP RELIEF FROM M10A COS A418
HP RELIEF FROM LINE 111EF-18"-P COS A405
HP RELIEF FROM LINE 112EF-18"-P COS A405
HP RELIEF FROM LINE 115EF-18"-P COS A405
HP RELIEF FROM LINE Nº 116EF-18"-P COS A405
HP RELIEF FROM LINE Nº 115EF-18"-P COS A405
HP RELIEF FROM LINE Nº 114EF-18"-P COS A405
HP RELIEF TO V24 & FLARE SYSTEM COS A419
352 EC-20"-R
352EC-20"-R HP RELIEF HEADER
FROM FUTURE T.O.M. COMPRESSORS
HP RELIEF FROM M5 COS A416
HP RELIEF FROM M4 COS A406
HP RELIEF FROM LINE 156EF-20"-P COS A404
HP RELIEF FROM LINE 155EF-20"-P COS A404
HP RELIEF FROM V1B COS A404
HP RELIEF FROM V1C COS A404
354EC-12"-R
HP RELIEF FROM LINE 157EF-20"-P COS A404
HP RELIEF FROM V1A COS A404
HP RELIEF FROM LINE 124x-32"-P COS A407
LP VENT FROM V3 COS A409
LP VENT FROM V5 COS A409
252EA-14"-V LP VENT SUB HEADER
252 EA-14"-V
252EA-14"-V LP VENT HEADER
HP RELIEF FROM 105EF-20"-P COS A404
HP RELIEF FROM 101EF-20"-P COS A404
HP RELIEF FROM M1 COS A404
HP RELIEF FROM LINE 208EF-20"-P COS A404
HP RELIEF FROM M2 COS A404
LP VENT FROM V4 COS A409
LP VENT FROM E5 COS 408
LP VENT FROM V35 COS A409
LP VENT FROM V6 COS A408
LP VENT FROM PSE V4-10 COS A409
LP VENT FROM M9 COS A409
BY ELF-NORGE
MALON BOTTLES
796EF-2"-FG
DRAIN LOW POINTS (TYPICAL)
SLOPE
269EA-14"-V
(DO NOT POCKET THIS LINE)
SAMPLE CONN.
TO DRAINAGE SYSTEM COS A428
LOCATE ADJACENT TO SP24
TO DRAINAGE SYSTEM COS A428
FROM TURBINE BLOW DOWN SYSTEM COS A414
LP VENT FROM V14B COS A411
LP VENT FROM V16C COS A410
LP VENT FROM V16A COS A412
LP VENT FROM V14A COS A412
LP VENT FROM MOISTURE ANALYSER COS A407
LP VENT FROM V14C COS A410
LP VENT FROM E48 COS A411
2 NOV 1977
AS BUILT
AS BUILT
TO INFORMATION RECEIVED UP TO
NOTES:-
1) HP RELIEF HEADER TO SLOPE CONTINUOUSLY TO V24
2) LP VENT HEADER TO SLOPE CONTINUOUSLY TO V7.
ELF-NORGE
FRIGG FIELD
TREATMENT PLATFORM Nº1
JOB 1-40-C2
NORTH SEA
McDERMOTT - HUDSON
LONDON - ENGLAND
NONE
19 NOV 74
ELN 2110
A424
PIPING & INSTRUMENT DIAGRAM
HP RELIEF & LP VENT SYSTEMS
ISSUED FOR AS BUILT
SEE REVISION LIST
APPROVED FOR CONSTRUCTION
FOR CLIENT APPROVAL
PRELIMINARY

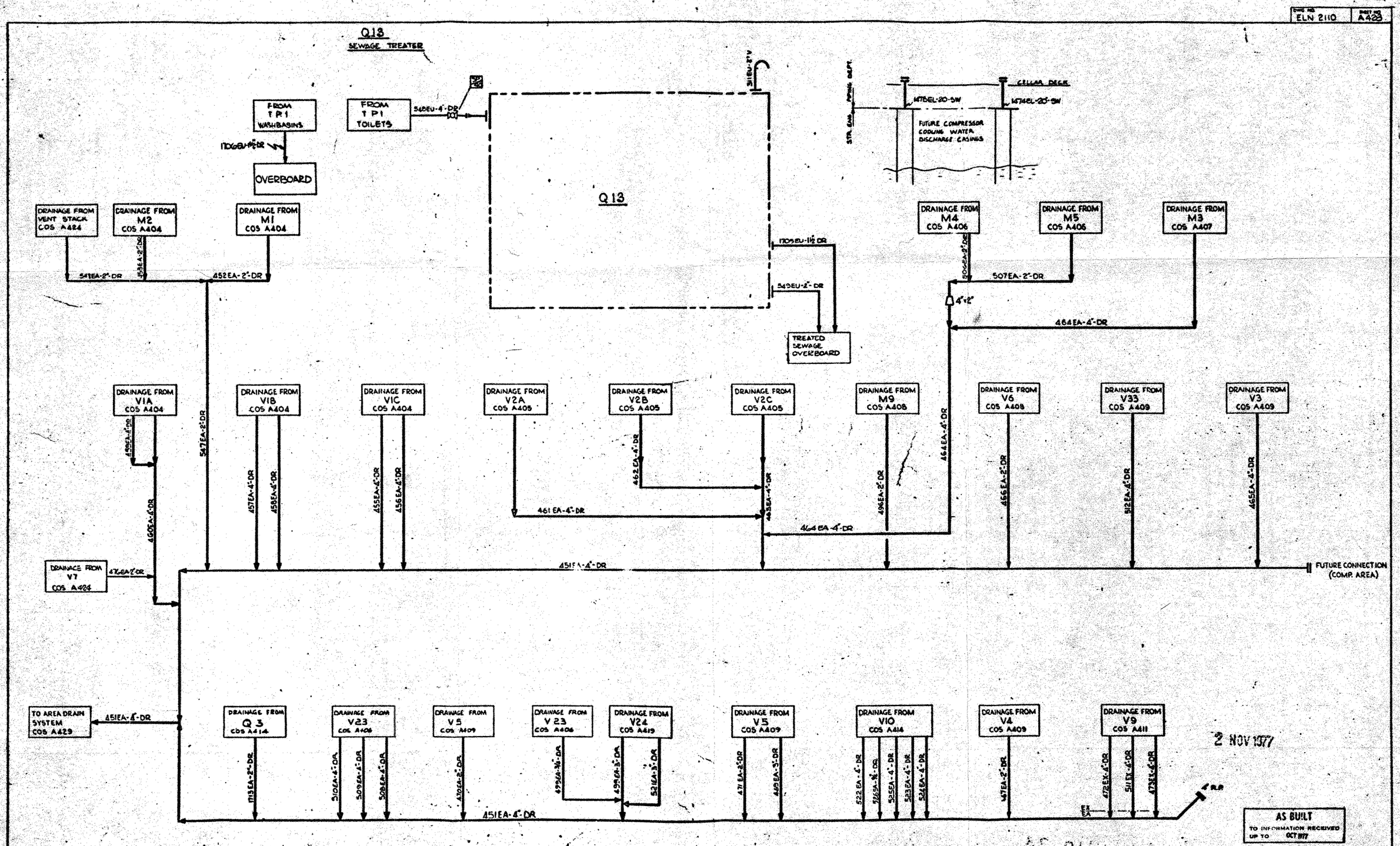

DWG NO. ELN 2110
SHEET NO. A428
Q13
SEWAGE TREATER
FROM TP1 WASHBASINS
FROM TP1 TOILETS
OVERBOARD
Q13
CELLAR DECK
FUTURE COMPRESSOR COOLING WATER DISCHARGE CASINGS
DRAINAGE FROM VENT STACK COS A424
DRAINAGE FROM M2 COS A404
DRAINAGE FROM M1 COS A404
DRAINAGE FROM M4 COS A406
DRAINAGE FROM M5 COS A406
DRAINAGE FROM M3 COS A407
TREATED SEWAGE OVERBOARD
DRAINAGE FROM V1A COS A404
DRAINAGE FROM V1B COS A404
DRAINAGE FROM V1C COS A404
DRAINAGE FROM V2A COS A405
DRAINAGE FROM V2B COS A405
DRAINAGE FROM V2C COS A405
DRAINAGE FROM M9 COS A408
DRAINAGE FROM V6 COS A408
DRAINAGE FROM V33 COS A409
DRAINAGE FROM V3 COS A409
DRAINAGE FROM V7 COS A424
FUTURE CONNECTION (COMP. AREA)
TO AREA DRAIN SYSTEM COS A429
DRAINAGE FROM Q3 COS A414
DRAINAGE FROM V23 COS A406
DRAINAGE FROM V5 COS A409
DRAINAGE FROM V23 COS A406
DRAINAGE FROM V24 COS A419
DRAINAGE FROM V5 COS A409
DRAINAGE FROM V10 COS A414
DRAINAGE FROM V4 COS A409
DRAINAGE FROM V9 COS A411
451EA-4"-DR
2 NOV 1977
AS BUILT
TO INFORMATION RECEIVED UP TO OCT 1977
AS BUILT
ELF-NORGE
FRIGG FIELD
TREATMENT PLATFORM No1
JOB 1-40-C2
McDERMOTT - HUDSON
LONDON - ENGLAND
PLATTERY
NONE
23 JAN 75
ELN 2110
A 428
PIPING AND INSTRUMENT DIAGRAM
PROCESS DRAINAGE SYSTEM

DWG NO. ELN-2110 | SHEET NO. A-429

V13
SUMP CAISSON
0·914 M (3'-0") DIA.
VESSEL TRIM Nº 1189EA-P

P3
SUMP PUMP
95 L/m AT 57 BARS ΔP
(29 USGPM AT 82 PSI ΔP)

ZONE 05 UPPER
ZONE 04 UPPER
ZONE 03 UPPER
ZONE 02 UPPER
ZONE 01 UPPER
2" VENT
8"x4"
1703EA-6"-DR
529EA-6"-DR
530EA-6"-DR
529EA-8"-DR
SLOPE
RP
6"x6"
6"x4"
531EA-8"-DR SUB HEADER
ZONE 04 LOWER
ZONE 02 LOWER
ZONE 01 LOWER
ZONE 05 LOWER
ZONE 03 LOWER
WEST HEADER
534EA-8"-DR
FUTURE CONN.
SUB HEADER 534 EA-8"-DR
532EA-6"-DR
532EA-8"-DR
CENTRAL HEADER
FUTURE CONN
EAST HEADER
532EA-10"-DR
10"x6"
4" RP
533EA-10"-DR
ZONE 12 CELLAR
FIRE PUMP HOUSE
DRAIN FROM VIZA C05 A414
VENT & OVERFLOW FROM VIZA C05 A414
ZONE 09 CELLAR
ZONE 01 LOWER
ZONE 13 CELLAR
DRAIN FROM BUND AROUND PUMPS P9-A P9-B
WORKSHOP ROOF DRAIN
WORKSHOP & STORES WORKSHOP ROOF DRAIN
TUNDISH
534EA-6"-DR
536EA-6"-DR
535EA-6"-DR
537EA-6"-DR
538EA-6"-DR
539EA-6"-DR
DRAINS FROM BUND AROUND PUMPS
SUB HEADER SLOPE
P2 A
P2-B
P1-A/B
717EA-2"DR
710EA-2"-DR
484EA-4"-DR
482EA-2"-DR
528 EA-12"-DR MAIN HEADER
12" MAIN HEADER
ZONE 11 CELLAR
ZONE 10 CELLAR
ZONE 12 CELLAR
ZONE 15 CELLAR
FROM MUD PIG LAUNCHER MOA C05 A418
FROM MUD PIG LAUNCHER MOB C05 A418
DRAIN FROM P11 C05 A418
FROM MUD AIR COMP Q2 C05 A417
DRAIN FROM AIR COMP. Q3 C05 A413 SHT 1
DRAIN FROM 6P35A & B C05 A414 A
DRAIN FROM VIZA & B OVERFLOW C05 A414
540EA-6"-DR SUB HEADER
SLOPE SUB HEADER
542 EA-6"-DR
543EA-6"-DR
544EA-8"-DR
MIZEA-8"-DR
MISEA-8"-DR
542EA-6"-DR
GENERAL DRAIN HEADER C05 A-428
451EA-4"-DR
TO OIL SKIMMER V5 C05 A-409
IBIEA-2"-P
LOCATE DRAIN END OVERBOARD AT EL 21000
LOCATE AT P8
246EA-4"-P
451 EA-4"-DR
P8-1
V13-1
L/A
CELLAR DECK
ELN. -0000
ACTUAL WATER LEVEL -3000mm (-9'-10")
V13
PUMP INTAKE EL -6·196m (-20'-4")
P3
SEAL LOOP
12"
528EA-12"-DR
528 EA-12"-DR MAIN HEADER
ZONE 06 CELLAR
ZONE 07 CELLAR
FIRE PUMP HOUSE
FROM AIR CONDITIONING UNIT
DRAIN FROM BUND AROUND PUMPS P14A/B & P7
1716EA-2"-DR
DRAIN FROM VIB C05 A414
VENT/OVERFLOW FROM VIB C05 A414
1703EA-2"-DR
493EA-6"-DR
497EA-6"-DR
535EA-6"-DR
465EA-2"-DR
532EA-8"-DR
538EA-10"-DR
FROM FIREWATER HEADER, C05 A416 SHT 1 OF 2.
NOTE: ALL TIE-INS TO ENTER HEADERS & SUB HEADERS AT 45° IN DIRECTION OF FLOW.

AS BUILT

AS BUILT
TO INFORMATION RECEIVED UP TO OCT 1977

2 NOV 1977

REV	DESCRIPTION	DATE	BY
7	SEE REVISION LIST	5-5-77	DL
6	SEE REVISION LIST	6-9-76	JL
5	SEE REVISION LIST	18-5-76	DL
4	SEE REVISION LIST	24-2-76	CW
3	ISSUED FOR "AS BUILT"	7-11-75	DL
2	SEE REVISION LIST	8-7-75	JL
1	ISSUED FOR CLIENT APPROVAL PRELIMINARY	1-3-75	JAM
0			

ELF - NORGE
FRIGG FIELD

TREATMENT PLATFORM Nº 1
NORTH SEA JOB 1-40-C2

McDERMOTT - HUDSON
LONDON — ENGLAND

SCALE	DATE	DWG NO
NONE	28 JAN 75	ELF 2110
SHEET NO	REV NO	
1 OF 1	00	A-429

DRG DRAWN ON MICROFILM

Single Wire Diagrams

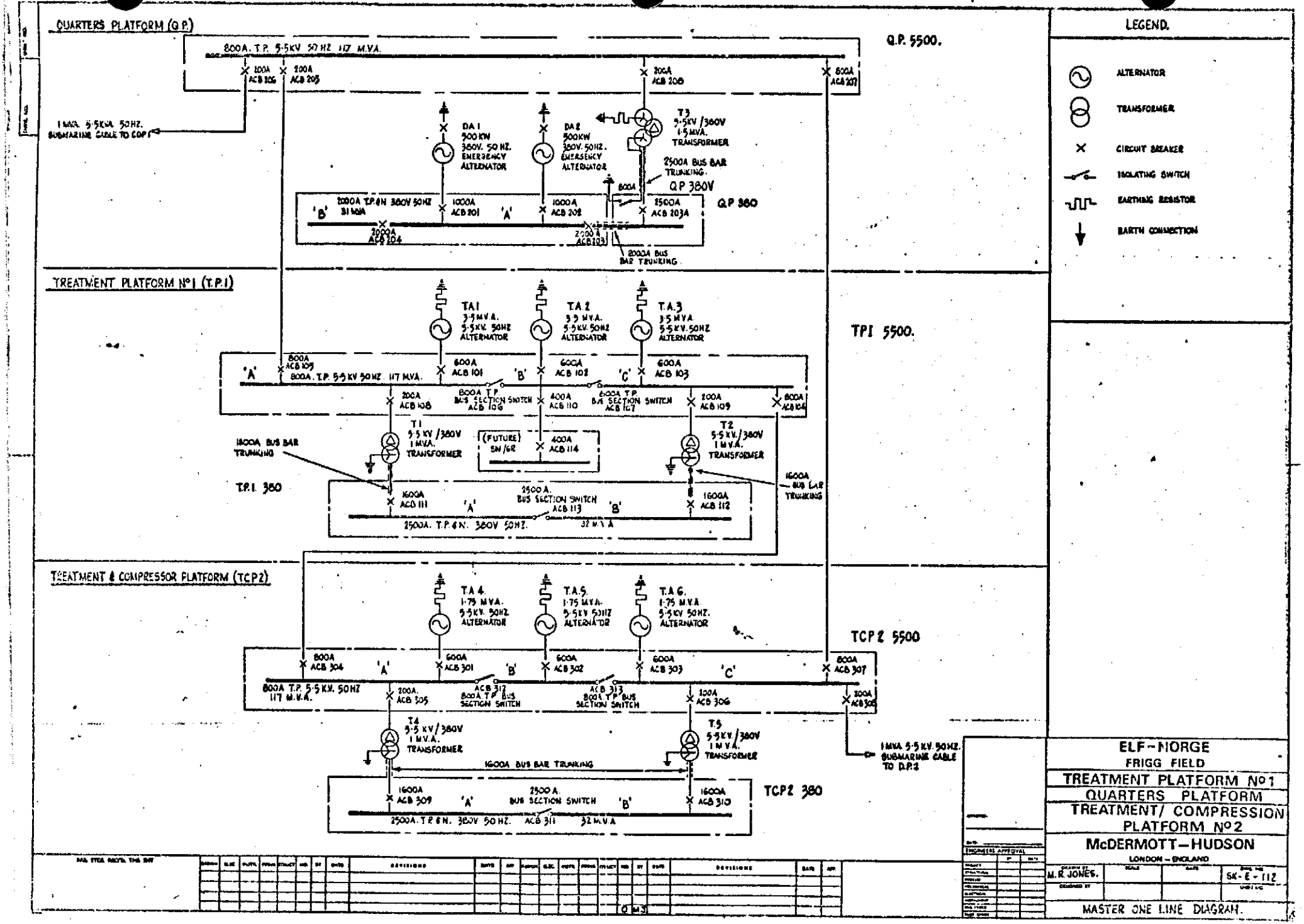
QUARTERS PLATFORM (Q.P.)
800A. T.P. 5·5KV 50 HZ 117 M.V.A.
Q.P. 5500.
100A ACB 206
200A ACB 205
200A ACB 208
600A ACB 207
1 MVA. 5·5KVA. 50HZ. SUBMARINE CABLE TO COP'F
DA 1 500 KW 380V. 50 HZ. EMERGENCY ALTERNATOR
DA 2 500KW 380V. 50HZ. EMERGENCY ALTERNATOR
T3 5·5KV/380V 1·5 MVA. TRANSFORMER
2500A BUS BAR TRUNKING.
800A
Q.P 380V
Q.P 380
2000A T.P.6N 380V 50HZ 31 MVA
'B'
1000A ACB 201
'A'
1000A ACB 202
2500A ACB 203A
2000A ACB 204
2000A ACB 203
2000A BUS BAR TRUNKING.
TREATMENT PLATFORM Nº 1 (T.P.1)
TA1 3·5 M.V.A. 5·5 KV. 50HZ ALTERNATOR
TA 2 3·5 M.V.A. 5·5 KV. 50HZ ALTERNATOR
TA 3 3·5 M.V.A. 5·5 KV. 50HZ ALTERNATOR
TPI 5500.
'A'
800A ACB 105
800A. T.P. 5·5 KV 50 HZ 117 M.V.A.
600A ACB 101
'B'
600A ACB 102
'C'
600A ACB 103
200A ACB 108
800A T.P. BUS SECTION SWITCH ACB 106
400A ACB 110
600A T.P. BUS SECTION SWITCH ACB 107
200A ACB 109
800A ACB 104
T1 5·5 KV/380V 1 M.V.A. TRANSFORMER
(FUTURE) SN/6R
400A ACB 114
T2 5·5 KV./380V 1 M.V.A. TRANSFORMER
1600A BUS BAR TRUNKING
1600A BUS BAR TRUNKING
T.P.1 380
1600A ACB 111
'A'
2500 A. BUS SECTION SWITCH ACB 113
'B'
1600A ACB 112
2500A. T.P.6N. 380V 50HZ.
32 M.V.A
TREATMENT & COMPRESSOR PLATFORM (TCP2)
T.A 4. 1·75 M.V.A. 5·5 KV. 50HZ. ALTERNATOR
T.A.5. 1·75 M.V.A. 5·5 KV 50HZ ALTERNATOR
T.A.6. 1·75 M.V.A. 5·5 KV 50HZ. ALTERNATOR
TCP 2 5500
800A ACB 304
'A'
600A ACB 301
'B'
600A ACB 302
600A ACB 303
'C'
800A ACB 307
800A T.P. 5·5 KV. 50HZ 117 M.V.A.
200A. ACB 305
ACB 312 800A T.P. BUS SECTION SWITCH
ACB 313 800A T.P. BUS SECTION SWITCH
200A ACB 306
200A ACB 308
T4 5·5 KV/380V 1 M.V.A. TRANSFORMER
T5 5·5 KV/380V 1 M.V.A. TRANSFORMER
1 MVA 5·5 KV. 50 HZ. SUBMARINE CABLE TO D.P.2
1600A BUS BAR TRUNKING
TCP2 380
1600A ACB 309
'A'
2500 A. BUS SECTION SWITCH
'B'
1600A ACB 310
2500A. T.P.6N. 380V 50 HZ. ACB 311
32 M.V.A
LEGEND.
ALTERNATOR
TRANSFORMER
CIRCUIT BREAKER
ISOLATING SWITCH
EARTHING RESISTOR
EARTH CONNECTION
ELF-NORGE
FRIGG FIELD
TREATMENT PLATFORM Nº 1
QUARTERS PLATFORM
TREATMENT/ COMPRESSION PLATFORM Nº 2
McDERMOTT-HUDSON
LONDON-ENGLAND
M.R. JONES.
SK-E-112
MASTER ONE LINE DIAGRAM.

DRG NO ELN 2110 | PART NO 603 PAGE 2

M.C.C. TP1 380

FOR CONTINUATION SEE DRG ELN 2110 SHT 603 PAGE 1

WORKSHOP BUSBAR FEEDER

RELAY BOX RB-2

PRESSURE SW CABINET

RELAY BOX RB-3

INTERPOSING RELAY CABINET

J

FIRE PUMP HOUSE — MCC CONTROL PANEL

MCC CONTROL PANEL — WORKSHOP

MCC CONTROL PANEL — GENERATOR ROOM

INTERFACE ROOM NO 1 & CABLING & SWGR ROOM

INTERFACE ROOM NO 2 & INSTRUMENT ROOM

TRANSFORMER ROOM

BATTERY ROOM

LEGEND

- (42) MOTOR (RATING SHOWN IN KW)
- HEATER
- 36kW HEATER BATTERY (SEE NOTE 3)
- J JUNCTION BOX
- STOP/START PUSHBUTTON
- 1 DIRECT-ON LINE CONTACTOR STARTER WITH THERMAL OVERLOAD PROTECTION & MAGNETIC EARTH LEAKAGE PROTECTION
- 4 CONTACTOR FEEDER
- CIRCUIT IDENTIFICATION (SEE NOTE 2)

NOTES

1. THIS DRAWING TO BE READ IN CONJUNCTION WITH DRG Nº ELN 2110 SHT 603 PAGE 1
2. FOR CIRCUIT IDENTIFICATION & LIST OF REFERENCE DRAWINGS SEE DRG Nº ELN 2110 SHT 603 PAGE 1
3. FIGURE SHOWN ADJACENT TO HEATER BATTERIES REPRESENTS THE SUM OF THE RATINGS OF INDIVIDUAL HEATERS ON THAT BANK

AS BUILT

23 DEC 1977

AS BUILT
TO INFORMATION RECEIVED UP TO SEPTEMBER 1977

NO.	BY	DATE	REVISIONS	DATE	APP
0	[illegible]	[illegible]	ISSUE FOR ENG & APPROVAL	2-11-76	[illegible]
1	[illegible]	[illegible]	ISSUED AS BUILT	[illegible]	[illegible]

CUSTOMER APPROVAL
BP
DATE 1-11-76

ENGINEERS APPROVAL

ELF-NORGE
FRIGG FIELD

TREATMENT PLATFORM Nº1
NORTH SEA JOB 1-40-C2 W.O. 104 M

McDERMOTT-HUDSON
LONDON-ENGLAND

DRAWN BY	SCALE	DATE	DRG NO
R.B. CLARK	NONE	19.5.76	ELN 2110
CHECKED BY			SHEET NO. 603 PAGE 2

TP1 380V ONE LINE DIAGRAM

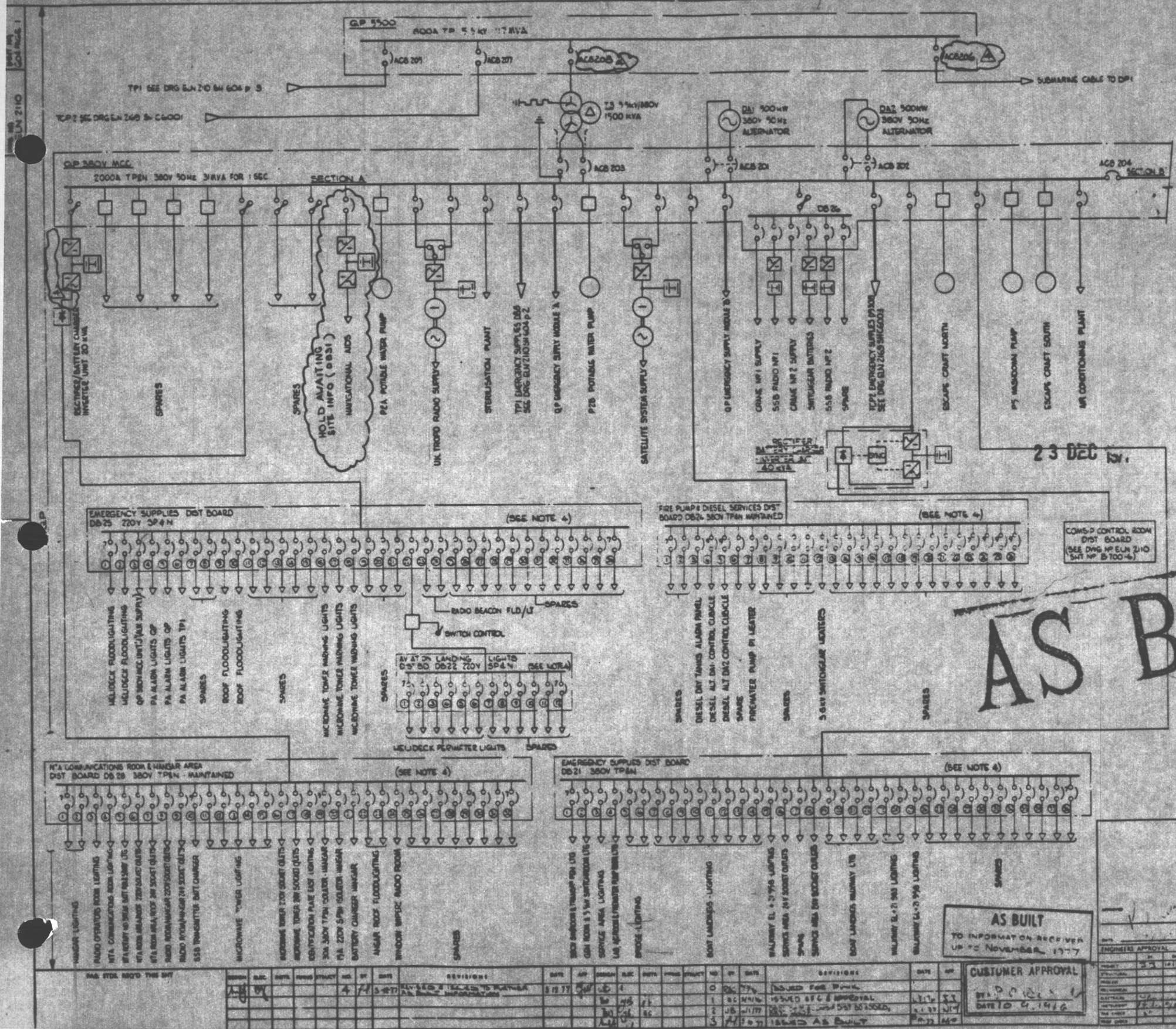

LEGEND

- CIRCUIT BREAKER / SWITCH NUMBER (6 - TRIPLE POLE; 7 - SINGLE POLE; 8 - DOUBLE POLE; 9 - FOUR POLE)
- MOTOR STARTER OR CONTACTOR
- RECTIFIER - BATTERY CHARGER
- INVERTER
- BATTERY
- SYNCHRONISING UNIT
- STATIC SWITCHING UNIT
- ROTARY INVERTER
- MANUAL CHANGEOVER SWITCH
- FUSE SWITCH
- MOTOR
- SINGLE POLE SWITCH

NOTES

1. THIS DRAWING TO BE READ IN CONJUNCTION WITH DRAWINGS ELN 211 SHT 601 ELN 211 SHT 602 ELN 210 SHT 604 PAGES 2 & 3 ELN 2109 SHT C6001 ELN 2109 SHT C6003
2. ALL SPARE WAYS IN DISTRIBUTION BOARDS ARE EQUIPPED WITH MCBs SEE DIST BOARD SCHEDULES
3. FOR DETAILS OF MOTOR CONTROLS ETC SEE GP 380V ONE LINE DIAGRAM ELN 211 SHT 602.
4. UNLESS OTHERWISE NOTED ALL MCBs TO BE SINGLE POLE (i.e. TYPE 7)

AS BUILT

REFERENCE DRAWINGS

DRG NO	SHT NO	TITLE
ELN 211	601	GP 5.5kV ONE LINE DIAGRAM
ELN 211	602	GP 380V ONE LINE DIAGRAM
ELN 2109	C6001	TOP2 5.5kV ONE LINE DIAGRAM
ELN 2109	C6003	TOP2 MASTER ONE LINE DIAGRAM EMERGENCY SUPPLIES
ELN 210	C601	MASTER ONE LINE DIAGRAM
ELN 210	602	TOP1 5.5kV ONE LINE DIAGRAM
ELN 210 604 p 2 & 3		MASTER ONE LINE DIAGRAM EMER. MAINTAINED/ESSN. SUPPLIES
ELN 211	630	EMERGENCY SUPPLIES DIST BOARD DB21 SCHEDULE
ELN 211	633	FIRE PUMP & DIESEL SERVICES DIST BD DB24 SCHEDULE
ELN 211	634	N°A COMMUNICATIONS ROOM & HANGAR DIST BD DB28 SCHEDULE

REVISION	BY	DATE	APP
0	BC	7/7/76	
1	BC	14/9/76	ISSUED AFC & APPROVAL
2	JB	21/11/77	DIST BD SCHEDS.
3	AH	6/3/78	ISSUED AS BUILT

DRAWN BY	SCALE	DATE	DRG NO
R.B. CLARK	NONE	12.5.76	ELN 210
			SHT NO 604 PAGE 1

MASTER ONE LINE DIAGRAM FOR EMERGENCY/ MAINTAINED/ESSENTIAL SUPPLIES.

ELF - NORGE
FRIGG FIELD

TREATMENT PLATFORM N°1
NORTH SEA JOB 1-40-C2 W.D. 104 M

McDERMOTT - HUDSON
LONDON - ENGLAND

AS BUILT

23 DEC 77

DRWG NO ELN 2110 | SHT NO 604 PAGE 2

TP1

QP 380V MCC SEE DRG ELN 2110 SHT 604 PAGE 1

TP1 380V MCC SEE DRG ELN 2110 SHT 604 PAGE 3

DBB - 380V TP&N (SEE NOTE 3)

EMERGENCY SUPPLIES DISTRIBUTION BOARD
LOCATED ROOM No 2

NW STAIRS ZONE 1 - LIGHTING
NW WALKWAY ZONE 1 - LIGHTING
N WALKWAY - ZONE 1 - LIGHTING
NE WALKWAY - ZONE 1 - LIGHTING
NE STAIRS & CRANE ZONE 1 - LTG
ZONE 1 INTERIOR & UPPER LEVEL LTG
WALKWAY & EXTERIOR ZONE 2 LTG
WALKWAY & EXTERIOR ZONES 2&3 LTG
UPPER LEVEL ZONE 3 LIGHTING
WALKWAY & STAIRS - ZONE 4 LIGHTING
INTERIOR (UPPER LEVEL ZONE 4 LTG)
WALKWAYS & STAIRS ZONE 5 LIGHTING
ZONE 5 INTERIOR (UPPER LEVEL) LTG
ZONE 12 LIGHTING
ZONE 12 WALKWAYS LIGHTING
ZONE 8 - LIGHTING
ZONE 9 - LIGHTING
ZONE 10 - LIGHTING
ZONE 11 - LIGHTING
ZONE 7 - LIGHTING
ZONE 6 - LIGHTING
BOAT LANDINGS SOUTH - LIGHTING
BOAT LANDINGS NORTH - LIGHTING
LIFEBOAT LAUNCH EAST - LIGHTING
LIFEBOAT LAUNCH WEST - LIGHTING
BOAT LANDINGS STAIRS
WIRE UPPER LEVEL LIFEBOAT FLOODLIGHTS ZONE 5
WIRE UPPER LEVEL LIFEBOAT FLOODLIGHTS ZONE 5
HOLD
FLARE STACK JUNCTION BOX 'X'
CABLE Nº 391
DIESEL C.P. FIRE PUMP HOUSE 'B'
CRANE SUPPLY EAST
CRANE SUPPLY WEST
DIESEL C.P. FIRE PUMP HOUSE 'A'
SPARES
STANDBY FOGHORN BATTERY CHARGER
CONTROL PANEL BATTERY ROOM VENT FANS CABLE Nº 515
TA1 TA2 TA3
TURBINE ACOUSTIC VENT FAN MOTORS
CENTRAL FLOODLIGHT C.P. CONTROL SUPPLY
FLOODLIGHT L.P. VENT ZONE 05
STANDBY VENTILATION SYSTEM DAMPER MOTORS CABLE Nº 605
Q5 CONTROL SUPPLY
COLUMNS 1 & 2 LIGHTING
SPARES

2702
2703

RECTIFIER/ BATTERY CHARGER - INVERTER UNIT 8KVA
SYNC

100A SEE NOTE 4
100A SEE NOTE 4
100A SEE NOTE 4

24V D.C. POWER PACK 2 KW

INSTRUMENT SUPPLIES DIST BOARD DB10B 220V A.C. MAINTAINED
INTERFACE ROOM Nº 2
INTERPHONE
HEV & PRESSURISATION CONTROL FLARE READY FOR IGNITION INDICATION
GAS DETECTION SYSTEM
CONTROL DESK ALARMS
SHUTDOWN RELAY PANEL

INSTRUMENT SUPPLIES DIST BOARD DB10A 220V A.C. MAINTAINED
INTERFACE ROOM Nº 1
TELEMETRY SYSTEM
FIRE DETECTION SYSTEM
GAS DETECTION SYSTEM
INTERPHONE
SPARES
HEV & PRESSURISATION CONTROLS
SPARES

INSTRUMENT SUPPLIES DIST BOARD DB9B 24V D.C. MAINTAINED
INTERFACE ROOM Nº 2
INTERPOSING RELAY CABINET
SHUTDOWN RELAY PANEL
SPARE
GAS DETECTION
SPARES

INSTRUMENT SUPPLIES DIST BOARD DB9A 24V D.C. MAINTAINED
INTERFACE ROOM Nº 1
E.S.D. RELAY CABINET
FIRE DETECTION SYSTEM/UV MP +DELUGE VALVE SOLENOIDS
GAS DETECTION
MISCELLANEOUS EQUIPMENT RACK
LD-04-J
SPARE

LEGEND

- CIRCUIT BREAKER / SWITCH NUMBER — 6 - TRIPLE POLE - NEUTRAL LINK; 7 - SINGLE POLE - NEUTRAL LINK; 8 - DOUBLE POLE (SP&N); 9 - FOUR POLE (TP&N)
- ISOLATOR - BREAKS ALL SUPPLY POLES
- RECTIFIER - BATTERY CHARGER
- INVERTER
- BATTERY
- SYNC — SYNCHRONISING UNIT
- LOGIC — LOGIC CONTROL UNIT
- STATIC SWITCHING UNIT
- CHANGEOVER CONTACTOR 4 POLE
- FUSE
- D.O.L. TYPE MOTOR STARTER
- ST — SHUNT TRIP COIL

NOTES

1. THIS DRAWING TO BE READ IN CONJUNCTION WITH DRAWINGS ELN 2111 SHT 602, ELN 2110 SHT 603 & ELN 2110 SHT 604 PAGES 1 & 3
2. ALL SPARE WAYS IN DISTRIBUTION BOARDS ARE EQUIPPED WITH MCB's SEE DIST BOARD SCHEDULES.
3. UNLESS OTHERWISE NOTED ALL MCBs TO BE DOUBLE POLE (i.e. TYPE 8)
4. FUSE CONTAINED IN 'FUSEBOARD 'A'' LOCATED IN PASSAGEWAY ADJACENT TO BATTERY ROOM).

REFERENCE DRAWINGS

DRG Nº	SHT Nº	TITLE
ELN 2111	602	QP - 380V ONE LINE DIAGRAM
ELN 2110	603	TP1 - MASTER ONE LINE DIAGRAM EMERGENCY SUPPLIES
ELN 2110	604 P1	MASTER ONE LINE DIAGRAM EMER. MAINTAINED/ESSEN SUPPLIES
ELN 2110	603	TP1 380V ONE LINE DIAGRAM
ELN 2110	601	MASTER ONE LINE DIAGRAM
ELN 2110	608	DIST BOARD DB8 CIRCUIT SCHEDULE
ELN 2110	6029	DIST BOARD DB9A CIRCUIT SCHEDULE
ELN 2110	6026	DIST BOARD DB9B CIRCUIT SCHEDULE
ELN 2110	6027	DIST BOARD DB10A CIRCUIT SCHEDULE
ELN 2110	6028	DIST BOARD DB10B CIRCUIT SCHEDULE

AS BUILT
TO INFORMATION RECEIVED UP TO NOVEMBER 1977

CUSTOMER APPROVAL
BY
DATE

ENGINEERS APPROVAL

	BY	DATE
PROJECT	S.S.	11.11.76
STRUCTURAL		
PIPEWORK		
PIPE HANGERS		
ELECTRICAL		
INSTRUMENT		
PIPE STRESS		
PIPE CHECK		

REVISIONS	DATE	APP
0 ISSUED FOR PMK	7/11/76	
1 ISSUED FOR APPROVAL	3.12.76	
2 HOLD REMOVED & SW Nº 53 TO 58 ADDED	11.1.77	
3 REVISED & ISSUED TO AS BUILT INFORMATION	8.12.77	

ELF - NORGE
FRIGG FIELD

TREATMENT PLATFORM Nº 1
NORTH SEA **JOB 1-40-C2** W.D. 104 M

McDERMOTT - HUDSON
LONDON - ENGLAND

DRAWN BY	SCALE	DATE	DRWG NO
R.P. CLARK	NONE	9.3.76	ELN 2110
DESIGNED BY			SHEET NO 604 PAGE 2

MASTER ONE LINE DIAGRAM FOR EMERGENCY/ MAINTAINED/ ESSENTIAL SUPPLIES

3

TA1 3.5MVA 3.5kV 50Hz ALTERNATOR

TA2 3.5MVA 3.5kV 50Hz ALTERNATOR

TA3 3.5MVA 3.5kV 50Hz ALTERNATOR

TP1 3300 800A TP 3.5kV 50Hz 117MVA

ACB 101 SECTION 'A'

ACB 102 SECTION 'B'

ACB 103 SECTION 'C'

ACB 106a

ACB 107

ACB 105

ACB 108

ACB 109

ACB 104

TOP SEE DRG ELN 2110 SHT GO4 PAGE 1.

T1 3.5kV/380V 1 MVA

T2 3.5kV/380V 1 MVA

TCP2 SEE DRG ELN 2168 SHT C.6001

TP1 380V MCC 2500A 380V TPBN 50Hz

ACB 111 SECTION 'A'

ACB 113

ACB 112 SECTION 'B'

AC SUPPLY FAN NO 1
HYDRAULIC POWER UNIT
INST & UTILITY AIR COMPRESSOR
DIESEL TRANSFER PUMP
TA3 AUXILIARY LUBE OIL PUMP
TA3 LUBE OIL HEATER
TA3 CACAC FAN 'A'
TA3 CACAC FAN 'B'
TA3 ANTI CONDENSATION HEATER
TA3 BLOW IN DOOR HEATER
TA3 LUBE OIL COOLER FAN
TA1 LUBE OIL COOLER FAN
TA1 AUXILIARY LUBE OIL PUMP
TA1 LUBE OIL HEATER
TA1 CACAC FAN 'A'
TA1 CACAC FAN 'B'
TA1 ANTI CONDENSATION HEATER
TA1 BLOW IN DOOR HEATER
GENERATOR HOUSE VENT FAN NO 1

EMERGENCY SUPPLIES DIST BOARD DSB SEE DRG ELN 2110 SHT GO4 PAGE 2

TA2 AUXILIARY LUBE OIL PUMP
TA2 LUBE OIL HEATER
TA2 CACAC FAN 'A'
TA2 CACAC FAN 'B'
TA2 ANTI CONDENSATION HEATER
GENERATOR HOUSE VENT FAN NO 2
TA2 BLOW IN DOOR HEATER
TA2 LUBE OIL COOLER FAN
AC SUPPLY FAN NO 2
DIESEL TRANSFER PUMP
HYDRAULIC POWER UNIT
INST & UTILITY AIR COMPRESSOR
WASHDOWN PUMP

24V DC POWER PACK SEE DRG ELN 2110 SHT GO4 PAGE 2

BATTERY DIST BOARD DB4 380V TPBN

SWITCHROOM BATTERY CHARGER
TA1 BATTERY CHARGER
TA2 BATTERY CHARGER
TA3 BATTERY CHARGER

LIGHTING DIST BOARD DB1 380V TPBN (SEE NOTE 4)

ZONE 01 LIGHTING
ZONE 02 LIGHTING
ZONE 03 LIGHTING
ZONE 04 LIGHTING
SPARE
ZONE 04 LIGHTING
ZONE 08 LIGHTING
ZONE 07 & 09 LIGHTING
ZONE 10 & 12 LIGHTING
ZONE 11 LIGHTING
ZONE 13 LIGHTING
PEDESTAL LIGHTING CRANE #5
GAUGE GLASS LIGHTING
SPARE
TP1 SOCKETS 20A (OWNES) ZONE 05
24V SOCKETS ZONE 01 (WEST) ZONE 02
3W SOCKETS ZONE 01 & 02 (WEST)
24V SOCKETS CELLAR DECK (WEST)
24V SOCKETS CELLAR DECK (EAST)
PEDESTAL LIGHTING CRANE #3
ZONE 03 LIGHTING
ZONE 05 LIGHTING
ZONE 06 LIGHTING
24V SOCKETS ZONE 05
24V SOCKETS ZONE 06
SPARE

LEGEND

- CIRCUIT BREAKER - SWITCH NUMBER (6 - TRIPLE POLE, 7 - SINGLE POLE, 8 - DOUBLE POLE, 9 - FOUR POLE)
- MOTOR STARTER OR CONTACTOR
- RECTIFIER - BATTERY CHARGER
- BATTERY
- EARTHING RESISTOR
- MOTOR

NOTES

1. THIS DRAWING TO BE READ IN CONJUNCTION WITH DRAWINGS ELN 2110 SHT 603 ELN 2110 SHT 602 & ELN 2110 SHT 604 PAGES 1 & 2
2. ALL SPARE WAYS IN DISTRIBUTION BOARDS ARE EQUIPPED WITH MCBs SEE DIST BOARD SCHEDULES
3. FOR DETAILS OF MOTOR CONTROLS ETC SEE TP1 380V ONE LINE DIAGRAM ELN 2110 SHT 603
4. UNLESS OTHERWISE NOTED ALL MCBs TO BE DOUBLE POLE (IE TYPE 8)

23 DEC '77

AS BUILT

AS BUILT
TO INFORMATION RECEIVED UP TO NOVEMBER 1977

CUSTOMER APPROVAL
BY P.J. Clark
DATE 20.4.1978

REV	BY	DATE	REVISIONS
0	RBC	2.12.77	ISSUED FOR P.O.C.
1	WC	3.3.78	ISSUED AS BUILT & UPDATED
2	RBC	5.10.77	ISSUED AS BUILT
3	RBC	2.10.78	REVISED & ISSUED AS BUILT

REFERENCE DRAWINGS

DRG NO	SHT NO	TITLE
ELN 2110	602	TP1 3.5 kV ONE LINE DIAGRAM
ELN 2110	603	TP1 380V ONE LINE DIAGRAM
ELN 2110	604 SH 1	MASTER ONE LINE DIAGRAM - EMER MAINTAINED ESSEN SUPPLIES
ELN 2110	C.6001	MASTER ONE LINE DIAGRAM
ELN 2110	661	LIGHTING DIST BOARD DB1 CIRCUIT SCHEDULE
ELN 2168	C.6001	TCP2 3.5kV ONE LINE DIAGRAM

ELF - NORGE
FRIGG FIELD

TREATMENT PLATFORM No 1
NORTH SEA JOB 1-40-C2 W.B 104 M

McDERMOTT - HUDSON
LONDON - ENGLAND

DRAWN BY	SCALE	DATE	DRWG NO
R.B. CLARK	NONE	7.5.76	ELN 2110
DESIGNED BY			SHT NO 604 PAGE 3

ONE LINE DIAGRAM FOR EMERGENCY/ MAINTAINED/ ESSENTIAL SUPPLIES

ENGINEERS APPROVAL

	BY	DATE
PIPE WORK		
STRUCTURAL		
PROCESS		
MECHANICAL		
ELECTRICAL		
INSTRUMENT		
PIPE STRESS		
H & V		

HAS STDS. ABO'D. THIS SHT.

REVISION	BASIC	INSTR.	PIPING	STRUCT	MECH.	BY	DATE	REVISIONS

NUMBERING SYSTEM FOR DOCUMENTS

Drawing Numbering System

TP1 JOB BOOK

VOLUME 1

SECTION 5.1. Drawing Numbering System

5.1.1. The drawing number is formed by a combination of the customer name abbreviation and the job number:

Elf Norge:	Job Number:
ELN	2110

5.1.2. Sheet Numbering Sequence

Number	Description
0000 or 000	General topographic, plot plans permits.
1000 or 100	Foundation and Jackets.
2000 or 200	Deck sections, bridges, skids and structures.
3000	Buildings.
4000	Index or front sheet - (if required).
4001-4099 or 400	Process flowsheets.
4100-4199	Utility flowsheets.
4200-4299	Line Lists.
4300-4399 or 400	Equipment arrangements and plot plans.
4400-4499	Vessel drawings.
4500-4599	Special piping item drawings.
4600-4999	Equipment drawings.
5000 or 500	Piping.
6000	Electrical
7000	Instrumentation.
8000	Marine and construction equipment mooring systems
9000	Transportation and operations (loadout drawings and installation sequence).

SECTION 5.2. Specification, Requisition and Purchase Order Numbering System.

5.2.1. Equipment and Material Specifications.

Equipment and material specifications are written to describe the technical requirements for a particular piece of equipment or specifically identified piece of material for a given project.

5.2.1. (contd)

The requirements for these specifications are as follows:-

The followings sources of information are used for producing these specifications.

a) project design premises
b) flow sheets
c) electrical one line diagrams
d) area classification drawings (electrical)
e) general specifications
f) procurement information regarding the type of equipment and material available.

Each specification consists of the project(job) number and the group number. The numbering system for these groups is as follows:-

Structural

a) '00' Group, General Topographic, Plot Plans, Permits.
b) '10' Group, Foundations and Jackets.
c) '20' Group Deck Sections, Bridges, Skids and Structures.

Buildings '30' Group

Equipment and Machinery '40' Group

a) Sub-Group '41' Vessels
b) Sub-Group '42' Pumps and Drivers
c) Sub-Group '43' Compressors and Drivers
d) Sub-Group '44' Gas Turbines
e) Sub-Group '45' Internal Combustion Engines
f) Sub-Group '46' Shell and Tube Heat Exchangers
g) Sub-Group '47' Air Cooled Heat Exchangers
h) Sub-Group '48' Packaged Units
i) Sub-Group '49' Other Capital Equipment Including Cranes etc.

Piping '50' Group

Electrical '60' Group

a) Sub-Group '60' General Specifications and Package Specifications.
Specification Numbers 600 to 609.

b) Sub-Group '61' Generator and Prime Mover Specifications.
Specification Numbers 610 to 619.

c) Sub-Group '62' H.V. Switchgear and H.V. M.C.C.
Specification Numbers 620 to 629.

d) Sub-Group '63' Transformer Specifications
Specification Numbers 630 to 639.

e) Sub-Group '64' L.V. Switchgear and L.V. M.C.C.
Specification Numbers 640 to 649.

f) Sub-Group '65' D.C. System/Batteries/ Distribution Specification Numbers 650 to 659.

g) Sub-Group '66' Control Specifications
Specification Numbers 660 to 669.

h) Sub-Group '67' Protection Systems (Cathodic, Navaids etc.)
Specification Numbers 670 to 679.

i) Sub-Group '68' Minor Control (Motor Startes, Special Switches etc.)
Specification Numbers 680 to 689.

j) Sub-Group '69' Cables and Miscellaneous
Specification Numbers 691 to 699.

Instrumentation '70' Group

Sub-Group	Subject
'702'	Thermowells, Thermo Couples and Indicating Bi-Metal Thermometers
'703'	Pressure Instrumentals
'704'	Pressure Gauges
'705'	Differential Pressure
'706'	Orifice Plates, Orifice Flanges, Fabricated Meter Run.
'707'	Level Instruments
'708'	Gauge Glasses and Cooks
'709'	Control Valves
'710'	Pressure Safety Relief Valves
'711'	Traps, Filters and Strainers
'712'	Pressure, Temperature and Level Switches.
'714'	Receiver Instruments
'717'	Analytical Instruments
'79'	Bulk Material

Marine and Construction Equipment Mooring System

'80' Group

Transportation '90' Group

5.2.2. Numbering Examples

5.2.2.1. Specification:

2110	-	610
(Project Number)		(Specification Number group '6')

5.2.2.2. Requisition

2110 - 60 - R02

Project Number	Group Number	'R' indicates Requisition Number

5.2.2.3 Purchase Order

2110 - 60 - R02 - PO - 002

Project Number	-	Group Number	Requisition Number	'P O indicates Purchase Order Number.

SECTION 5.3. Equipment and line Identification

5.3.1. For equipment identification see attached P and ID's 'Legend for Piping and Instrument Diagrams'.

5.3.2. Line Identification

The line identification may consist of six parts. The following is an illustration:-

B126C-10"-P-111

B	-	Designates the 'B' unit of a contract.
126	-	Designates the line number.
C	-	Designates the line specification.
10"	-	Designates nominal line size.
P	-	Designates the commodity in the line.
111	-	Designates the insulation type.

If unit breakdown is not required, omit unit letter from the line identification.

5.3.3 Valve Identification

Each valve on the flowsheet and isometric is marked to denote piping specification valve type, valve facing and special valve type, as illustrated below:

EA2ROW

EA - Designates valve specifications
2 - Designates valve type
R - Designates valve facing
O - Designates special valve type
W - Designates opposite end valve facing

Group Description

First Group

Valve tagging which corresponds to pressure rating in standard piping specifications shall be of the following:

VALVE SPECIFICATIONS	PRIMARY ANSI RATING
EA	150 lb
EB	300 lb
EC	300 lb
ECX	600 lb
ED	600 lb
EP	600 lb
EE	900 lb
EF	1500 lb
EFX	1500 lb
EG	150 lb
EK	150 lb
EO	5000 lb
EX	6001b

Second Group

Valve type shall be any of the following:

1	- Gate	5	- Check
2	- Ball	6	- Needle
3	- Plug	7	- Butterfly
4	- Globe		

Third Group

Valve facing shall be any of the following:

S	- Screwed	Z	- Socket Weld
R	- Raised face	V	- Victualic Coupling
F	- Flat Face	X	- Solder Joint
J	- RTJ	U	- Union
W	- Welded		

Fourth Group (only if necessary)

Special valve type shall be any of the following:

F	- Full Port	L	- Lift
S	- Short Pattern	T	- Tilting Disc
V	- Venturi	Y	- Lug Type
W	- Wafer	O	- Used if not special type valve but with different end facings
P	- Pipeline		

Fifth Group (only if necessary)

Valve facing for opposite end shall be any of the following:

S	- Screwed	W	- Welded
R	- Raised Face	Z	- Socket Weld
F	- Flat Face	V	- Victualic Coupling
J	- RTJ	X	- Solder Joing

TABLES OF CONTENTS OF THE JOB BOOK

How to Use the Tables

Table of Contents

for

Volumes 1, 2, 3, 4.

TP1 JOB BOOK

VOLUME 1

SECTION 6

6.1 How to use the Tables

TP1 Job Book consists of the following four volumes:

Volume 1 - 'Project Description'
Gives a general information on the deposit characteristics of the Frigg Field, distribution of work between the prime contractors, local conditions and principles of design. Volume 1 consists of one book. The book is divided into seven sections. Each section begins with a section card which separates the sections.

Volume 2 - 'Engineering Data' -
Gives detailed information on the design of the Platform. It consists of 16 books. The right hand colume of the Table of Contents gives the 'Book No.' of the book in which the required section can be found. Books are numbered from one to sixteen. Book number is blocked on the spine and the front of each cover.

Volume 3 - 'Vendor Data' -
Gives information obtained from the Vendors of the equipment, such as drawings, specifications, manuals and calculations. It consists of 18 books. Table of Contents is arranged by Equipment Number. The right hand column of the Index gives the 'Book No.' of the book in which the required Section can be found.

Volume 4 - 'Contract and Financial Statement'
Consists of the Main Contract between Elf Norge and McDermott Hudson, contracts awarded by Elf Norge and managed by McDermott Hudson, Purchase Orders, and the Financial Statement. This volume is divided into four sections and consists of 6 books. The right hand column of the Table of Contents gives the 'Book No.' of the book in which the required Section can be found.

TP1 JOB BOOK

VOLUME 1

PROJECT DESCRIPTION

TABLE OF CONTENTS OF VOLUME 1

SECTION 1 GENERAL

1.1 Description of the Consortium

1.2 Description of the Frigg Field

1.2.1 General information on the Frigg Field and connected projects.

1.2.2 Sketch of Frigg Field and the connected projects.

1.3 Distribution of work between the prime contractors.

SECTION 2 DESCRIPTION OF TP1

2.1 General Drawings and Plot Plans

2.2 General Description of the Platform

SECTION 3 GENERAL DATA

3.1 Climatic and Sea Data

SECTION 4 PRINCIPLES OF DESIGN

4.1 Principles of Electrical, Instrument, Process and Mechanical design.

4.2 Interconnections between platforms

4.2.1 Process Interconnections

4.2.2 Electrical Interconnections

4.2.3 Instrument Interconnections

4.2.4 Communication

4.3 Main P & ID's

4.4 Single Wire Diagrams

SECTION 5 NUMBERING SYSTEM FOR DOCUMENTS

5.1 Drawing Numbering System

5.2 Specification, Requisition and Purchase Order Numbering System.

5.3 Equipment Tag Numbering System

SECTION 6 TABLE OF CONTENTS OF THE JOB BOOK

6.1 How to Use the Tables

6.2 Table of Contents for Volumes 1, 2, 3 and 4

SECTION 7 DISTRIBUTION LIST FOR THE JOB BOOKS

TP1 JOB BOOK

VOLUME 2

ENGINEERING DATA

TABLE OF CONTENTS OF VOLUME 2

			BOOK
SECTION 1	DESIGN SHEETS		
1.1	PIPING AND INSTRUMENT DIAGRAMS		1
1.1.1	LIST OF P. AND I.D.'s		1
1.1.2	P. AND P.D.'s		1
1.1.3	PROCESS FLOW DIAGRAM		1
1.2	LIST OF EQUIPMENT		1
1.2.1	MECHANICAL		1
1.2.2	ELECTRICAL		1
1.2.3	INSTRUMENT		1
1.3	A GENERAL AND TECHNICAL DESCRIPTION		1
SECTION 2	CALCULATION NOTES		
2.1	LIST OF CALCULATION NOTES		2
2.2	CALCULATION NOTES		2
2.2.1	MECHANICAL	SECTION 2.2.1 to 2.2.3	2
2.2.2	ELECTRICAL	SECTION 2.2.4 to 2.4.1.7	3
2.2.3	INSTRUMENT	SECTION 2.4.1.8 to 2.4.2.5	4
2.2.4	STRUCTURAL	SECTION 2.4.2.6 to 2.4.4.3	5
2.2.5	PROCESS	SECTION 2.2.5 to 2.5.1.3	6
SECTION 3	DRAWINGS		
3.1	DRAWING REGISTER		7
3.2	LINE LIST		7
3.3	ISOMETRIC REGISTER		7
3.4	DRAWINGS	101 to 2449	7
	DRAWINGS	2450 to 626	8
	DRAWINGS	628 to 707	9
	DRAWINGS	708 to 7212	10

SECTION 3 DRAWINGS (cont'd)		BOOK
3.5 ISOMETRICS	1 to 499A	11
	401B to 1334	12

SECTION 4 STANDARDS AND GENERAL SPECIFICATIONS

4.1	LIST OF STANDARDS AND SPECIFICATIONS	13
4.2	STANDARDS AND SPECIFICATIONS	13

SECTION 5 EQUIPMENT SPECIFICATIONS AND REQUISITIONS

5.1	LIST (TABLE) OF REQUISITIONS - SPECIFICATIONS	13
5.2	LIST (TABLE) OF SPECIFICATION - REQUISITIONS	13
5.3	EQUIPMENT REQUISITIONS	13
	EQUIPMENT REQUISITIONS	14
	EQUIPMENT REQUISITIONS	15
5.4	EQUIPMENT SPECIFICATIONS	16

SECTION 6 CONTRACT AWARDED BY ELF UNDER McDERMOTT HUDSON MANAGEMENT - Technical aspect

6.1	LIST OF CONTRACTS, THEIR TITLE, SPECIFICATIONS AND REFERENCE DRAWINGS	16
6.2	COPIES OF SCOPE OF WORK OF EACH CONTRACT	16

TP1 JOB BOOK

VOLUME 3

VENDOR DATA

INDEX OF CONTENTS OF VOLUME 3

PROJECT NO 2110

VENDOR DATA VOLUME 3

VENDOR	DESCRIPTION	P.O. NUMBERS	ITEM NO	SECTION	BOOK NO
LEE HOWL	CONDENSATE BOOSTER PUMP	2110-42-R02-P0-004	P1 A & B	20	2
RYALAND	FUEL PUMPS	2110-42-R10-P0-014	TA 1 & 2	21	2
SPP	FIRE WATER PUMPS	2110-42-R06-P0-001	P6 A & B V11 A & B	22	2
SPP	WASHDOWN PUMP	2110-42-R04-P0-006	P7	22	2
SUMO LTD	SUBMERSIBLE PUMP	2110-42-R03-P0-005	P3	23	3
TANGIE ENGINEERING	DIESEL PUMPS	2110-42-R08-P0-002	P8 A & B P13 A & B	24	3
TANGIE ENGINEERING	GLYCOL FILL PUMPS	2110-42-R12-P0-011	P13 A & B	24	3
TANGIE ENGINEERING	METHANOL TRANSFER PUMPS	2110-42-R14-P0-013	P17 A & B	24	3
T.R.W. MISSION	MUD RECIRCULATION PUMPS	2110-42-R10-P0-010	P11	25	3
	CATEGORY 43 COMPRESSORS & DRIVERS				
HILLS McCANNA	BALL VALVE ACTUATOR	2110-43-R03-P0-002	ESDVM 4-1, HVM 4-1 HVM 4-2	26	3
HYDRAULIC & PNEUMATIC	HYRDAULIC POWER UNIT	2110-43-R02-P0-001	Q7 & Q8 P22 A & B	27	3
HYDRAULIC & PNEUMATIC	CONTROL VALVE MANIFOLD TYPE B	2110-43-R05-P0-003	ESDVM 10A1	27	3
HYDRAULIC & PNEUMATIC	CONTROL VALVE MANIFOLD TYPE A	2110-43-R08-P0-004	ESDV B7	27	3
	CATEGORY 46 - SHELL & TUBE HEAT EXCHANGERS				
CRUESOT LOIRE	GLYCOL AIR COOLERS	2110-46-R01-P0-001	E2 AB & C	28	3
JOHNSON HUNT	FUEL GAS EXCHANGER	2110-46-R02-P0-002	E3	29	3
	CATEGORY 48 - PACKAGED UNIT				
AFA MINERVA	HALON SYSTEM	2110-48-R03-P0-007	Q4	30	3
BESCON/PLENTY	GLYCOL REGENERATION UNIT	2110-48-R01-P0-002	Q1A B & C V14 A B & C V15 AB& C V16 A B & C V17 A B C V19 A to F V20 AB& C E1A B & C E4 AB & C H1 A B & C P10 A to F	31	3 & 4
COMPAIR/BROOMWADE	MUD SYSTEM AIR COMPRESSOR	2110-48-R02-P0-004	Q2	32	4
COMPAIR/BROOM & WADE	AIR COMPRESSOR PACKAGE	2110-48-R04-P0-001	Q5	32	4

VENDOR	DESCRIPTION	P.O. NUMBER	ITEM NO	SECTION	BOOK NO
	CATEGORY 20 - STRUCTURAL				
D. DILLINGER	PLATES AND SHAPES	2110-20----PO-002		1	1
EXPORT UNION	STEEL PLATE	2110-20----PO-003		2	1
RHEINSTAL	TUBE	2110-20-R01-PO-001		3	1
	CATEGORY 41 - VESSELS				
A.M.F.	CHARCOAL FILTER (GLYCOL)	2110-41-R14-PO-010	V21 - V31	4	1
BESCON PLENTY	HIGH PRESSURE VENT SCRUBBER	2110-41-R11-PO-007	V24	5	1
CAXTON NAME PLATE	NAMEPLATES ST. ST	2110-41-----PO-011		6	1
CHRISTIE HYDRAULIC	PULSATION DAMPENERS	2110-41-R12-PO-008	V29 A & B, V30 A & B	7	1
COCKERILL	FWKO SEPARATORS	2110-41-R01-PO-002	V1 AB & AC	8	1
COCKERILL	GLYCOL CONTACTORS	2110-41-R02-PO-002	AB & C	9	1
DUNBAR	OIL SKIMMER	2110-41-R05-PO-005	V5	10	1
DUNBAR	CONDENSATE STORAGE TANK	2110-41-R13-PO-009	V33	10	1
FRAM FILTERS	COALESCER	2110-41-R04-PO-004	V4	11	1
GROSVENOR STEEL	CONDENSATE SURGE VESSEL	2110-41-R03-PO-001	V3	12	1
KIRKDEAN ENG	AIR START VESSELS	2110-41-R15-PO-012	V35 A & B	13	1
NEWBANK	LOW PRESSURE VENT SCRUBBER	2110-41-R07-PO-003	V7	14	1
PREMABERG	FUEL GAS SCRUBBER	2110-41-R06-PO-006	V6	15	1
	CATEGORY 42 - PUMPS & DRIVERS				
C-MATIC SYSTEMS	BOOST PUMPS	2110-42----PO-015		16	1
DAWSON & DOWNIE	CONDENSATE RETURN PUMP	2110-42-R01-PO-009	P2 A & B	17	1
DAWSON & DOWNIE	GLYCOL INJECTION & METHANOL PUMPS	2110-42-R11-PO-007	P12 A & B P14 A & B	17 17	1 1
HAYWARD TYLER	MUD WATER PUMP	2110-42-R09-PO-008	P5	18	2
HAYWARD TYLER	CONDENSATE RECYCLE PUMP	2110-42-R13-PO-012	P15 A & B	18	2
KINDER JANES (LEWA)	SLOPS OIL PUMPS	2110-42-R05-PO-003	P9 A & B	19	2

VENDOR	DESCRIPTION	P.O. NUMBER	ITEM NO	SECTION	BOOK NO
DOWELL SCHLUMBERGER	PART OF MUD PACKAGE	2110-48-R06-PO-003	P4 VB V25 V26 V28 & V29 V8 A & B V12 A & B	33	5
DOWELL SCHLUMBERGER	FITTINGS	2110-48-----PO-009		33	5
DREXEL (UK) LTD	SEWAGE TREATMENT PLANT	2110-48-R10-PO-008	Q13	34	5
ENGINEERING & SCIENTIFIC EQUIPMENT	HARDNESS TESTER	2110-48-----PO-010		35	5
V.I.M.	WORKSHOP HEATING & PRESSURISATION	2110-48-R07-PO-006	Q11	36	5
V.I.M.	FIREWATER PUMP HOUSE HEATING AND PRESSURISATION	2110-48-R08-PO-006	Q12 A & B	36	5
V.I.M.	GENERATOR PACKAGE	2110-48-R09-PO-005	Q9 SP19	36	5
	CATEGORY 49 - OTHER EQUIPMENT				
AFA MINERVA	FIRE EXTINGUISHERS	2110-49-R51-PO-022		37	6
ANGEL TRUCK CO	HAND TROLLEY	2110-49-R08-PO-028	M16	38	6
BRISTOL UNIFORMS	FIREARMS AND RESCUE EQUIPMENT	2110-49-R52-PO-027	HT4/GT2/H57	39	6
BRITISH OXYGEN COMPANY	DC WELDING M/C WORKSHOP	2110-49-R20-PO-015		40	6
BRITISH OXYGEN COMPANY	GAS WELDING EQUIPMENT	2110-49-R21-PO-015		40	6
BRITISH OXYGEN COMPANY	PIPE CUTTERS & BEVELLERS	2110-49-R25-PO-015		40	6
BRITISH OXYGEN COMPANY	WELDING CUBICLE WORKSHOP	2110-49-R26-PO-015		40	6
BRITISH OXYGEN COMPANY	PIPE CLAMPS - WORKSHOP	2110-49-R27-PO-015		40	6
BRITISH OXYGEN COMPANY	OXYACETYLENE CYLINDER TROLLEY	2110-49-R29-PO-015		40	6
COPPERWELD	WELDING ROD OVEN	2110-49-R22-PO-013		41	6
A CROS	REFRIGERATED DRINKING FOUNTAIN	2110-49-R56-PO-029		42	6
DE SEEUW /BURYRUS ERIE	50 TON CRANES	2110-49-R03-PO-001	M7 & M8	43	6
EDMUNDSONS	BENCH LIGHTS & SPARE BULBS-WORKSHOP	2110-49-R36-PO-014		44	7
EDMUNDSONS	AVOMETER - WORKSHOP	2110-49-R37-PO-014		44	7
EDMUNDSONS	MEGATESTER - WORKSHOP	2110-49-R38-PO-014		44	7

VENDOR	DESCRIPTION	P.O. NUMBER	ITEM NO	SECTION	BOOK NO
EDMUNDSONS	SOLDERING KIT - WORKSHOP	2110-49-R39-PO-014		44	7
EDMUNDSONS	ELECTRIC DRILL - WORKSHOP	2110-49-R40-PO-014		44	7
EDMUNDSONS	BATTERY CELL TESTER	2110-49-R41-PO-014		44	7
EUROFILCO	SPHERE RECEIVERS	2110-49-R01-PO-002	M1 M2 & M9	45	7
EUROFILCO	SPHERE RECEIVERS	2110-49-R04-PO-003	M1A 2A M9A	45	7
EUROFILCO	PIG LAUNCHERS (MUD)	2110-49-R06-PO-007	M10 A & B	45	7
EUROSTAAL	SPHERE LAUNCHERS/RECEIVERS	2110-49-R02-PO-004	M3 M4 & M5	46	7
FLOPETROL	BURNER BOOM	2110-49-R09-PO-009	M17 A & B	47	7
THOMAS P HEADLAND	LATHE - WORKSHOP	2110-49-R16-PO-011		48	7
THOMAS P HEADLAND	BENCH VICES - WORKSHOP	2110-49-R23-PO-011		48	7
THOMAS P HEADLAND	PIPE DOLLIES	2110-49-R24-PO-011		48	7
THOMAS P HEADLAND	PIPE CUTTERS - WORKSHOP	2110-49-R35-PO-011		48	7
THOMAS P HEADLAND	BATTERY MAINTENANCE KIT & HAND INSPECTION KIT	2110-49-R53-PO-011		48	7
G HUNTER	SHACKLES - WORKSHOP	2110-49-R30-PO-016		49	7
G HUNTER	CHAIN SLINGS - WORKSHOP	2110-49-R31-PO-016		49	7
G HUNTER	WIRE SLINGS - WORKSHOP	2110-49-R32-PO-016		49	7
KNITMESH	FILTER PADS FOR V5	2110-49-R61-PO-031		50	7
RANDALLS LTD	WORKSHOP TOILET FACILITIES	2110-49-R44-PO-018		51	7
ROWEN & COMPANY (LIGHTNIN MIXERS)	MUD AGITATORS	2110-49-R07-PO-008	M11A B C & D	52	7
RFD LTD	LIFEBOUYS & LIFEJACKETS	2110-49-R49-PO-024		53	7
RFD LTD	INFLATABLE LIFERAFTS	2110-49-R50-PO-021		53	7

VENDOR	DESCRIPTION	P.O. NUMBER	ITEM NO	SECTION	BOOK NO
SOWERBY WELCK	HAND OPERATED CRANES - 2 TON	2110-49-R54-PO-023	M19 A & B	54	7
TANGYE EPCO	HYDRAULIC JACKS	2110-49-R33-PO-017		55	7
TOOL CENTRE	DRILL STAND - WORKSHOP	2110-49-R14-PO-012		56	7
TOOL CENTRE	GRINDER - WORKSHOP	2110-49-R15-PO-012		56	7
TOOL CENTRE	POWER HACKSAW - WORKSHOP	2110-49-R17-PO-012		56	7
TOOL CENTRE	THREADING MACHINE	2110-49-R18-PO-012		56	7
TOOL CENTRE	PROTECTIVE CLOTHING - WORKSHOP	2110-49-R28-PO-012		56	7
TOOL CENTRE	PIPE BENDER	2110-49-R34-PO-012		56	7
TOOL CENTRE	HAND TOOL KIT - WORKSHOP	2110-49-R42-PO-012		56	7
TONNES FORCE	ELECTRIC HOISTS	2110-49-R19-PO-020	M18 A & B	57	7
TONNES FORCE	10 TON HOIST	2110-49-R46-PO-026		57	7
TONNES FORCE	HOIST (6 TON) CHAIN PULLEY	2110-49-R48-PO-026	M21 & M22 A & B M23 A & B M24 A & B	57	7
TONNES FORCE	10 TON HOIST	2110-49-R55-PO-026	M22 A & B	57	7
VAMACO	10 TON HAND OPERATED CRANES	2110-49-R46-PO-025	M20 A & B	58	7
VICTUALLIC	HAND GROUVERS	2110-49-R47-PO-010		59	7
WATERCRAFT	LIFEBOATS	2110-49-R05-PO-005	M14 & M15	60	7
WELCONSTRUCT	FURNITURE-WORKSHOP	2110-49-R11-PO-019		61	7
WELCONSTRUCT	BIN UNITS-WORKSHOP	2110-49-R12-PO-019		61	7
WELCONSTRUCT	BAR RACK UNITS - WORKSHOP	2110-49-R13-PO-019		61	7
JOHN ZINK	REMOTE GAS FLARE SYSTEM	2110-49-R10-PO-006	Q6	62	7
	CATEGORY 50 - PIPING VALVES				
ALTRINHAM LABS	CHARPY IMPACT TESTING	2110-50----PO-230		63	7
ANDERMANN	PIPE	2110-50-R77-PO-079		64	7

PROJECT NO 2110

VENDOR DATA VOLUME 3

VENDOR	DESCRIPTION	P.O. NUMBER	ITEM NO	SECTION	BOOK NO
ANDERMANN	BRANCH FITTINGS	2110-50-R92-PO-110		64	7
ANDERMANN	CARBON STEEL PLATE	2110-50-R155-PO-170		64	7
ASHFORD CONTROLS	NEEDLE VALVES	2110-50-R32-PO-035	EJ6W	65	7
BARR THOMSON	FLANGES	2110-50-R79-PO-217		66	7
BARR THOMSON	T.O.M. SPEC FLANGES	2110-50-R178-PO-194		66	7
BARR THOMSON	LINE BLINDS	2110-50-R184-PO-203		66	7
BARR THOMSON	FLANGES	2110-50-R191-PO-217		66	7
BARR THOMSON	FLANGES	2110-50-R196-PO-219		66	7
BARR THOMSON	FLANGES	2110-50-R05-PO-007		66	7
BASSI LUIGI	LARGE BORE BUTT WELD FITTINGS	2110-50-R52-PO-050		67	7
BASSI LUIGI	BUTTWELD ELBOW	2110-50-R142-PO-190		67	7
BECK CRESPEL	STUD BOLTS	2110-50-R21-PO-028		68	7
BECK CRESPEL	STUD BOLTS	2110-50-R49-PO-063		68	7
BECK CRESPEL	STUD BOLTS	2110-50-R38-PO-083		68	7
BECK CRESPEL	STUD BOLTS	2110-50-R91-PO-084		68	7
BECK CRESPEL	STUD BOLTS	2110-50-R129-PO-142		68	7
BECK CRESPEL	ALLOY STEEL STUD BOLTS	2110-50-R141-PO-193		68	7
BKL ALLOYS	BUTT WELD FITTINGS	2110-50-R12-PO-017		69	7
BKL ALLOYS	FITTINGS	2110-50-R75-PO-078		69	7
BKL ALLOYS	FITTINGS	2110-50-R81-PO-075		69	7
BKL ALLOYS	BUTTWELD FITTINGS	2110-50-R89-PO-098		69	7
BKL ALLOYS	BUTTWELD FITTINGS	2110-50-R116-PO-120		69	7

PROJECT NO 2110

VENDOR DATA VOLUME 3

VENDOR	DESCRIPTION	P.O. NUMBER	ITEM NO	SECTION	BOOK NO
BKL ALLOYS	FITTINGS	2110-50-R194-PO-214		69	7
BLACKELL CHARTON	VALVES	2110-50-R07-PO-058	EFIJ E84R EF4J EBJR EESJ EFJJ	70	7
BONNEY FORGE INTERNATIONAL	BRANCH FITTINGS	2110-50-R06-PO-004		71	8
BONNEY FORGE INTERNATIONAL	BRANCH FITTINGS	2110-50-R39-PO-061		71	8
BONNEY FORGE INTERNATIONAL	FITTINGS	2110-50-R45-PO-067		71	8
BONNEY FORGE INTERNATIONAL	FITTINGS	2110-50-R76-PO-074		71	8
BONNEY FORGE INTERNATIONAL	BRANCH FITTINGS	2110-50-R97-PO-124		71	8
BONNEY FORGE INTERNATIONAL	BRANCH FITTINGS	2110-50-R117-PO-121		71	8
BONNEY FORGE INTERNATIONAL	WELDOLETS	2110-50-R126-PO-126		71	8
BONNEY FORGE INTERNATIONAL	BRANCH FITTINGS	2110-50-R149-PO-158		71	8
BONNEY FORGE INTERNATIONAL	BRANCH FITTINGS	2110-50-R164-PO-179		71	8
BONNEY FORGE INTERNATIONAL	FITTINGS	2110-50-R129-PO-211		71	8
CAMERON	PIPE	2110-50-R03-PO-003		72	8
CHEN FITTINGS	BUTTWELD FITTINGS	2110-50-R226-PO-227		73	8
COASTAL ENG CORP	VALVES	2110-50-R09-PO-152		74	8
COPROSIDER	FITTINGS & PIPE	2110-50-R238-PO-236		75	8
COPROSIDER	FITTINGS AND PIPE	2110-50-R237-PO-236		75	8
COPROSIDER	FITTINGS AND PIPE	2110-50-R239-PO-236		75	8
ROBERT CORT	BALL VALVES 900 LB	2110-50-R02-PO-001	ESDV M3-1	76	8
ROBERT CORT	BALL VALVES 900 LB	2110-50-R50-PO-023	ESDV M4-1	76	8
CRANE LTD	BUTTERFLY VALVES	2110-50-R18-PO-016	EA7R	77	8
EUROFIT	FITTINGS	2110-50-R136-PO-184		78	8
EUROFIT	FITTINGS	2110-50-R167-PO-197		78	8
EUROFIT	WELDOLET	2110-50-R172-PO-191		78	8

PROJECT NO 2110

VENDOR DATA VOLUME 3

VENDOR	DESCRIPTION	P.O. NUMBER	ITEM NO	SECTION	BOOK NO
EUROFIT	FITTINGS	2110-50-R194-PO-212		78	8
EUROFIT	GLOBE VALVES	2110-50-R230-PO-229		78	8
EUROSTAAL	BUTTWELD FITTINGS	2110-50-R26-PO-011		79	8
EUROSTAAL	FLANGES	2110-50-R27-PO-012		79	8
FITHANDEL	PIPE	2110-50-R03-PO-032		80	8
FITHANDEL	LARGE BORE PIPE	2110-50-R03-PO-040		80	8
FITHANDEL	BUTTWELD FITTINGS	2110-50-R04-PO-052		80	8
FITHANDEL	FLANGES	2110-50-R05-PO-056		80	8
FITHANDEL	PIPE	2110-50-R10-PO-077		80	8
FITHANDEL	LARGE BORE PIPE	2110-50-R11-PO-019		80	8
FITHANDEL	BUTT WELD FITTINGS	2110-50-R13-PO-009		80	8
FITHANDEL	FLANGES	2110-50-R16-PO-045		80	8
FITHANDEL	FLANGES	2110-50-R27-PO-113		80	8
FITHANDEL	3D BENDS	2110-50-R33-PO-048		80	8
FITHANDEL	BUTT WELD FITTINGS	2110-50-R43-PO-060		80	8
FITHANDEL	BUTT WELD FITTINGS	2110-50-R44-PO-099		80	8
FITHANDEL	FLANGES	2110-50-R53-PO-054		80	8
FITHANDEL	EUQAL SPHERE FLOW TUBE	2110-50-R56-PO-128		80	8
FITHANDEL	3D BENDS	2110-50-R61-PO-059		80	8
FITHANDEL	CAPS	2110-50-R62-PO-065		80	8
FITHANDEL	FITTINGS	2110-50-R71-PO-068		80	8
FITHANDEL	FITTINGS	2110-50-R72-PO-068		80	8
FITHANDEL	FITTINGS	2110-50-R73-PO-069		80	8

PROJECT NO 2110

VENDOR DATA VOLUME 3

VENDOR	DESCRIPTION	P.O. NUMBER	ITEM NO	SECTION	BOOK NO
FITHANDEL	FITTINGS	2110-50-R74-P0-069		80	8
FITHANDEL	FLANGES	2110-50-R79-P0-076		80	8
FITHANDEL	BUTTWELD FITTINGS	2110-50-R89-P0-118		80	8
FITHANDEL	CARBON STEEL PIPE	2110-50-R110-P0-106		80	8
FITHANDEL	CAPS	2110-50-R62-P0-065		80	8
FITHANDEL	FITTINGS	2110-50-R71-P0-068		80	8
FITHANDEL	FITTINGS	2110-50-R72-P0-068		80	8
FITHANDEL	FITTINGS	2110-50-R73-P0-069		80	8
FITHANDEL	FITTINGS	2110-50-R74-P0-069		80	8
FITHANDEL	FLANGES	2110-50-R79-P0-076		80	8
FITHANDEL	BUTTWELD FITTINGS	2110-50-R89-P0-118		80	8
FITHANDEL	CARBON STEEL PIPE	2110-50-R110-P0-106		80	8
FITHANDEL	BUTTWELD FITTINGS	2110-50-R111-P0-104		80	8
FITHANDEL	CARBON STEEL FLANGES	2110-50-R112-P0-100		80	8
FITHANDEL	BUTTWELD FITTINGS	2110-50-R116-P0-130		80	8
FITHANDEL	BUTTWELD FITTINGS	2110-50-R119-P0-117		80	8
FITHANDEL	FLANGES	2110-50-R127-P0-129		80	8
FITHANDEL	BUTTWELD ELBOW	2110-50-R142-P0-132		80	8
FITHANDEL	FLANGES & FITTINGS	2110-50-R152-P0-153		80	8
FITHANDEL	PIPE FITTINGS	2110-50-R154b-P0-167		80	8
FITHANDEL	BUTTWELD FITTINGS	2110-50-R157-P0-165		80	8
FITHANDEL	CARBON STEEL PIPE	2110-50-R160-P0-172		80	8
FITHANDEL	REDUCER	2110-50-R163-P0-202		80	8
FITHANDEL	PIPE NIPPLES	2110-50-R168-P0-183		80	8
FITHANDEL	BUTTWELD SCREWED FITTINGS	2110-50-R197A-P0-215		80	8
FITHANDEL	BUTTWELD SCREWED FITTINGS	2110-50-194A-P0-215		80	8

VENDOR	DESCRIPTION	P.O. NUMBER	ITEM NO	SECTION	BOOK NO
FLEXITALLIC	GASKETS	2110-50-R20-PO-029		81	8
FLEXITALLIC	GASKETS	2110-50-R48-PO-071		81	8
FLEXITALLIC	GASKETS	2110-50-R28-PO-080		81	8
FLEXITALLIC	GASKETS	2110-50-R137-PO-134		81	8
FLEXITALLIC	GASKETS	2110-50-R175-PO-193		81	8
FLOTEC	VALVES	2110-50-R38-PO-051		82	8
GAS OIL & CONSTRUCTION	CARBON STEEL PIPE	2110-50-R10-PO-173		83	8
GAS OIL & CONSTRUCTION	PIPE FITTINGS	2110-50-R90-PO-102		83	8
GAS OIL & CONSTRUCTION	REDUCING TEES	2110-50-R102-PO-093		83	8
GAS OIL & CONSTRUCTION	FLANGES	2110-50-R104-PO-108		83	8
GAS OIL & CONSTRUCTION	CARBON STEEL FLANGED	2110-50R106-PO-101		83	8
GAS OIL & CONSTRUCTION	FLANGES	2110-50-R115-PO-111		83	8
GAS OIL & CONSTRUCTION	STEEL PIPE	2110-50-R166-PO-192		83	8
GAS OIL & CONSTRUCTION	CARBON STEEL PIPE	2110-50-R166-PO-196		83	8
GAUCHON	FLANGES	2110-50-R30-PO-044		84	8
GAUCHON	BLIND FLANGE	2110-50-R63-PO-096		84	8
GAUCHON	BLIND FLANGE	2110-50-R86-PO-096		84	8
GENERAL DESCALING	SPHERE FLOW TEE	2110-50-R24-PO-013		85	8
GENERAL DESCALING	SPHERE FLOW TEES	2110-50-R56-PO-033		85	8
HILLS McCANNA	VALVES	2110-50-R07-PO-053	EA1R EB1R EA1R (M) EA4R EB4R EA5R EB5R	86	8
HINDLE VALVES	GATE VALVES	2110-50-R40-PO-160	EG1R	87	8
KIPKISS SLINGSBY	CARBON STEEL PIPE	2110-50-R165-PO-182		88	8
IVCO (WORCESTER VALVES)	VALVES	2110-50-R08-PO-020		89	8
IVCO (WORCESTER VALVES)	BALL VALVES	2110-50-R08-PO-177		89	8
IVCO (WORCESTER VALVES)	VALVES	2110-50-R28-PO-036	EG2R	89	8

VENDOR	DESCRIPTION	P.O. NUMBER	ITEM NO	SECTION	BOOK NO
IVCO (WORCESTER VALVES)	CHAINWHEELS	2110-50-R88-PO-125	EA1R & EA2R	89	8
IVCO (WORCESTER VALVES)	BALL VALVES	2110-50-R181-PO-201	ED2S EF2W ED2JFB	89	8
KURT KOHORN	SHUT OFF VALVES	2110-50-R185-PO-205	ESDV B7	90	8
KURVERS INT LTD	CHARPY IMPACT TESTING	2110-50----PO-225		91	8
LION TUBE	SMALL BORE PIPE	2110-50-R10-PO-015		92	8
LION TUBE	CARBON STEEL PIPE	2110-50-R195-PO-218		92	8
LION TUBE & STEEL	CARBON STEEL PIPE	2110-50-R199-PO-216		92	8
MACHINEFAB RIEK	VALVES	2110-50-R173-PO-189		93	8
MARCEL MALBRANQUE	FLANGED VALVES	2110-50-R27-PO-133	EA1R (M)	94	8
MARCEL MALBRANQUE	VALVES	2110-50-R122-PO-140		94	8
MAPEGAZ	BALL VALVE ACTUATORS	2110-50-R01-PO-002	ESDV M12	95	8
MAPEGAZ	VALVES	2110-50-R08-PO-021	EA2W EB2W	95	8
MAPEGAZ	CHECK VALVES	2110-50-R17-PO-026	EF5JW	95	8
MAPEGAZ	VALVES	2110-50-R53-PO-046	EC2S	95	8
MAPEGAZ	BALL VALVES 900LB	2110-50-R51-PO-022	HVM 4 - 6 HVM 5 - 6 HVSG - 1	95	8
MAPEGAZ	BALL VALVES	2110-50-R80-PO-109		95	8
MAPEGAZ	BALL VALVES	2110-50-R94-PO-119	EA2W EF2Z	95	8
MAPEGAZ	BALL VALVES	2110-50-R113-PO-141	EDJ2	95	8
MAPEGAZ	BALL VALVES	2110-50-R120-PO-136	EF2W	95	8
MAPEGAZ	BALL VALVES	2110-50-R121-PO-145	EF2W	95	8
MAPEGAZ	BALL VALVES	2110-50-R139-PO-157	E-TF2Z	95	8
MAPEGAZ	BALL VALVES	2110-50-R146-PO-156	EF2Z	95	8
MAPEGAZ	VALVES	2110-50-R181-PO-200		95	8
McEVOY OIL FIELD	FLANGES PROTECTORS	2110-50-R203-PO-223		96	9
MERCANTILE MARINE	SPOOL PIPE	2110-50-R36-PO-043		97	9
MOIZIEUX	FLANGES	2110-50-R14-PO-006		98	9
MOIZIEUX	FLANGES	2110-50-R42-PO-092		98	9

VENDOR	DESCRIPTION	P.O. NUMBER	ITEM NO	SECTION NO	BOOK NO
MOIZIEUX	FLANGES	2110-50-R182-PO-198		98	9
MOIZIEUX	FLANGES	2110-50-R148-PO-159		98	9
MOKVELD	CHECK VALVES	2110-50-R54-PO-055		99	9
MOKVELD	VALVES	2110-50-R173-PO-189		99	9
MOORSIDE MACHINING	GASKETS	2110-50-R175-PO-210		100	9
MUNRO & MILLER	3D BENDS	2110-50-R25-PO-014		101	9
MUNRO & MILLER	BUTT WELD FITTINGS	2110-50-R55-PO-034		101	9
NEWELLS UK	INSULATION MATERIAL	2110-50-R68/70-PO-072		102	9
NEWMAN HATTERSLEY	VALVES	2110-50-R09-PO-042		103	9
NEWMAN HATTERSLEY	GLOBE VALVES	2110-50-R140-PO-155	EF4Z	103	9
NEWMAN HATTERSLEY	GLOBE CHECK VALVES	2110-50-R144-PO-162	EG4R EG5R	103	9
NEWMAN HATTERSLEY	GLOBE CHECK VALVES	2110-50-R145-PO-162	EG4R EG5R	103	9
C A NORGREN LTD	FILTER LUBRICATOR	2110-50-R109-PO-115	SP4	104	9
NORTH SEA EXP	CHANNEL PLATE U BOATS	2110-50-R225-PO-226		105	9
OLSTILL PIPE FITTINGS	FITTINGS	2110-50-R152-PO-176		106	9
OLSTILL PIPE FITTINGS	FLANGES	2110-50-R163-PO-180		106	9
PHOCEENE DE METAL	C/S FITTINGS	2110-50-R44-PO-094		107	9
PHOCEENE DE METAL	VALVES	2110-50-R84b-PO-169	EA5R	107	9
PHOCEENE DE METAL	BUTTWELD FITTINGS	2110-50-R111-PO-105		107	9
PHOCEENE DE METAL	FLANGES	2110-50-R123-PO-123		107	9
PHOCEENE DE METAL	CARBON STEEL FLANGES	2110-50-R131-PO-143		107	9
PHOCEENE DE METAL	BUTTWELD FITTINGS	2110-50-R133-PO-146		107	9
PHOCEENE DE METAL	BUTTWELD FITTING	2110-50-R134-PO-146		107	9
PHOCEENE DE METAL	SMALL BORE FLANGES	2110-50-R136-PO-147		107	9
PHOCEENE DE METAL	CARBON STEEL	2110-50-R138-PO-138		107	9
PHOCEENE DE METAL	BUTTWELD FITTINGS	2110-50-R147b-PO-150		107	9
PIPE CHEM	CARBON STEEL PIPE	2110-50----PO-220		108	9

VENDOR	DESCRIPTION	P.O. NO	ITEM NO	SECTION NO	BOOK NO
PREMABURG PIPELINE	PIPE PLUGS (ADJUSTABLE)	2110-50-R67-PO-122		109	9
SAPAG	VALVES	2110-50-R35-PO-047	EC15	110	9
SCANARMATUR	VALVES	2110-50-R98a-PO-164	EA7R EF4J	111	9
SCANARMATUR	POWER OPERATED BALL VALVES	2110-50-R161-PO-188	ESDV-M1DA-1	111	9
SCANARMATUR	BALL VALVES	2110-50-R181-PO-199	E02J-FB	111	9
SCANARMATUR	GLOBE VALVES	2110-R186-PO-207	EF4J	111	9
SCANARMATUR	CHARPY IMPACT TESTING	2110-50-R236-PO-233		111	9
SECK AUDCO VALVES	BALL VALVES	2110-50-R229-PO-228		112	9
SIMMONS & HAWKER	FLANGES	2110-50-R16-PO-008		113	9
SOCOMAT LTD	SHUT OFF VALVE	2110-50-R214-PO-224		114	9
PAOLO SORELLI	FITTINGS	2110-50-R183-PO-206		115	9
PAOLO SORELLI	FLANGES	2110-50-R16-PO-208		115	9
PAOLO SORELLI	PIPE	2110-50-R78B-PO-161		115	9
PAOLO SORELLI	CARBON STEEL PIPE	2110-50-R166-PO-186		115	9
PAOLO SORELLI	CARBON STEEL PIPE	2110-50-R160-PO-171		115	9
PAOLO SORELLI	LATROLETS	2110-50-R117-PO-174		115	9
SOUTH EASTERN FLANGE	FITTINGS	2110-50-R204-PO-221		116	9
STAVANGER RORHANDEL	CARBON STEEL PIPE	2110-50-R234-PO-232		117	9
TECHMATION	SWAGELOCK FITTINGS	2110-50-R56-PO-o97		118	9
TECHNITUB ITILIANA	BUTTWELD FITTINGS	2110-50-R04-PO-005		119	9
THEVIGNOT (AJ WATERS)	BALL VALVES	2110-50-R121-PO-144	EC2Z	120	9
TK VALVE LTD	BALL VALVES	2110-50-R19-PO-025	E02R E02RF	121	9

VENDOR	DESCRIPTION	P.O. NUNBER	ITEM NO	SECTION NO	BOOK NO
TK VALVE LTD	VALVES	2110-50-R113-PO-178		121	9
TK VALVE LTD	VALVES	2110-50-R153-PO-154	EF2W	121	9
TROUVAY & CAUVIN	CHARPY IMPACT TESTING	2110-50----PO-234		122	9
TROUVAY & CAUVIN	BUTTWELD FITTINGS	2110-50-R12-PO-018		122	9
TROUVAY & CAUVIN	PIPE	2110-50-R29-PO-037		122	9
TROUVAY & CAUVIN	BUTT WELD FITTINGS	2110-50-R31-PO-038		122	9
TROUVAY & CAUVIN	CARBON STEEL PIPE	2110-50-R41-PO-103		122	9
TROUVAY & CAUVIN	SCREWED FITTINGS	2110-50-R47-PO-127		122	9
TROUVAY & CAUVIN	PIPE	2110-50-R78-PO-089		122	9
TROUVAY & CAUVIN	PIPE	2110-50-R85-PO-085		122	9
TROUVAY & CAUVIN	PIPE	2110-50-R99-PO-087		122	9
TROUVAY & CAUVIN	PIPE	2110-50-R103-PO-088		122	9
TROUVAY & CAUVIN	FLANGES	2110-50-R104-PO-086		122	9
TROUVAY & CAUVIN	COUPLINGS	2110-50-R105-PO-082		122	9
TROUVAY & CAUVIN	CARBON STEEL PIPE	2110-50-R110-PO-107		122	9
TROUVAY & CAUVIN	CARBON STEEL PIPE	2110-50-R124-PO-131		122	9
TROUVAY & CAUVIN	BUTTWELD FITTINGS	2110-50-R125-PO-116		122	9
TROUVAY & CAUVIN	CARBON STEEL PIPE	2110-50-R130-PO-135		122	9
TROUVAY & CAUVIN	SEAM CARBON STEEL SWAGED NIPPLES	2110-50-R135b-PO-137		122	9
TROUVAY & CAUVIN	CARBON STEEL PIPE	2110-50-R143-PO-148		122	9
TROUVAY & CAUVIN	BUTTWELD FITTINGS	2110-50-R147a-PO-149		122	9
TROUVAY & CAUVIN	FLANGES	2110-50-R158-PO-166		122	9
TROUVAY & CAUVIN	BUTTWELD FITTINGS	2110-50-R163-PO-187		122	9
TROUVAY & CAUVIN	CARBON STEEL PIPE	2110-50-R167-PO-185		122	9
TROUVAY & CAUVIN	PIPE SWAGES	2110-50-R193-PO-213		122	9

VENDOR	DESCRIPTION	P. O. NUMBER	ITEM NO	SECTION NO	BOOK NO
TUBE-TURNE	TESTERS	2110-50-R177-PO-204		123	9
TUNGUM HYDRAULICS	TUBING	2110-50-R64-PO-057		124	9
UNIT CONTROL	VALVES	2110-50-R66-PO-095	EZ1S	125	9
VALVATEC LTD	BALL VALVES	2110-50-R190-PO-231		126	9
VAN DER AKKER	SPADES & SPACES	2110-50-R23-PO-030		127	9
VAN DER AKKER	STUD BOLTS	2110-50-R34-PO-031		127	9
VAN DER AKKER	STUD BOLTS	2110-50-R34-PO-031		127	9
VAN DER AKKER	STUD BOLTS	2110-50-R34-PO-031		127	9
VICTUALIC	JOINTS	2110-50-R60-PO-066		128	9
VICTUALIC	JOINTS	2110-50-R87-PO-073		128	9
VICTUALIC	JOINTS	2110-50-R107-PO-091		128	9
A.J.G. WATERS	BUTT WELD FITTINGS	2110-50-R31-PO-039		129	9
WILSON PIPE	BRANCH FITTINGS	2110-50-R15-PO-010		130	9
WILSON PIPE	BRANCH FITTINGS	2110-50-R15-PO-010		130	9
WILSON PIPE	FITTINGS	2110-50-R22-PO-027		130	9
WILSON PIPE	PIPE NIPPLES	2110-50-R37-PO-041		130	9
WILSON PIPE	SWAGE NIPPLES	2110-50-R46-PO-064		130	9
WILSON PIPE	FITTINGS	2110-50-R47-PO-062		130	9
WILSON PIPE	FITTINGS	2110-50-R90-PO-081		130	9
WILSON PIPE	PIPE FITTINGS	2110-50-R118-PO-112		130	9
WILSON PIPE	SWAGE NIPPLES	2110-50-R151-PO-151		130	9
WILSON PIPE	PIPE FITTINGS	2110-50-R152-PO-175		130	9
WOLVERHAMPTON ENG	STUDBOLTS	2110-50-R174-PO-195		131	9

VENDOR	DESCRIPTION	P.O. NUMBER	ITEM NO	SECTION	BOOK NO
WOLVERHAMPTON ENG	STUD BOLTS	2110-50-R170-PO-181		131	9
ZIDELL	VALVES	2110-50-R95-PO-114	EF 4J EE 5J EF 4Z	132	9
ZIEFLE	INSULATING JOINT	2110-50-R57-PO-049	SP8	133	9
ZIEFLE	SPECIAL TEE FITTINGS	2110-50-R108-PO-090		133	9
	CATEGORY 51 - PIPING SPECIALITIES				
AIROIL	PIPE SILENCERS	2110-51-R09-PO-006	SP17	134	10
AMENDOLA ENG	FIRE MONITOR	2110-51-R14-PO-009	SP25	135	10
AMENDOLA ENG	HOSES	2110-51-R18-PO-014	SP31	135	10
ANGUS FIRE ARMOUR	FOAM MAKING ACCESSORIES	2110-51-R23-PO-018	SP38 AB & C	136	10
APV SPIRO GILLS	TRAYS	2110-51-R01-PO-001	SP1	137	10
AUTOMOTIVE PRODUCTS	FILTERS	2110-51-R07-PO-016		138	10
COMPOFLEX	HOSE	2110-51-R04-PO-005	SP10 & SP34	139	10
FERGUSON RAMSY LTD	PADLOCKS	2110-51-R19-PO-012	SP32 SP33	140	10
FILTRATION & VALVES	STRAINERS	2110-51-R05-PO-004	SP14 & SP15	141	10
FLAREGAS ENGINEERING LTD	INVERTED LIGHT GAS SEAL	2110-51-R13-PO-011	SP24	142	10
FRAM EUROPE	COALSCERS	2110-51-R21-PO-017	SP35	143	10
NORBO	REMOTE OPERATOR FOR MONITOR BALL VALVES	2110-51-R251-PO-019	SP42	144	10
C. A. NORGREN	LUBRICATORS	2110-51-R08-PO-008	SP18	145	10
NORSK HAMMERVERK	WASHDOWN HOSE REELS	2110-51-R10-PO-013	SP21 SP41	146	10
PREAMBURG	VANE TYPE MIST EXTRACTOR	2110-51-R02-PO-002	SP3	147	10

VENDOR	DESCRIPTION	P.O. NUMBER	ITEM NO	SECTION	BOOK NO
S.I.C.L.	SPRINKLES	2110-51-R11-PO-010	SP22	148	10
TAMO LTD	VALVES	2110-51-R08-PO-015		149	10
VESTEC	VENT FILTER (BIRD CAGE)	2110-51-R06-PO-007	SP16	150	10
ALBERT ZIEFEL	INSULATING JOINTS	2110-51-R03-PO-003	SP 6, 9 & 12 13 ,20	151	10
	CATEGORIES 60 - 69 ELECTRICAL				
AARONITE	TREATMENT	2110-60-R05-PO-004		152	10
ACOUSTIC TECH	NOISE & VIBRATION STUDY	2110-60-R04-PO-003		153	10
GEC MACHINES	MOTORS	2110-60-R09-PO-005		154	10
ELF BELGIQUE	FUEL OIL	2110-60----PO-006		155	10
PARSONS PEEBLES	GENERATOR PACKAGE	2110-60-R01-PO-001	Q3 V18A & B SP37A&B	156	10 11 12 13 & 14
PARSONS PEEBLES	ALTERNATOR	2110-60-R02-PO-002		156	10 11 12 13 & 14
HUSBANDS SHIPYARDS	DISTRIBUTION BOARD	2110-64-R01-PO-001	DB8 DB9 A & B DB10 A/B DB11 A/B	157	15
A.E.G. TELEFUNKEN	RECTIFIER/INVERTER SYSTEM	2110-65-R01-PO-001	EM5	158	15
A.E.G. TELEFUNKEN	POWER SYSTEM	2110-65-R02-PO-002	EM6	158	15
A.E.I.	TERMINATION KITS	2110-69-R68-PO-035		159	15
ANIXTER	CABLE	2110-69-R02-PO-017		160	15
ANIXTER UK LTD	CABLE	2110-69-R67-PO-033		160	15
BARDUCTS	BUSBARS	2110-69-R40-PO-014		161	15
M.C. BIGNELL	SWITCHES	2110-69-R48-PO-019		162	15
BRITISH INSULATED CALENDER CABLES	JOINTS	2110-69-R64-PO-032		163	15
BRITISH INSULATED CALENDER CABLES	BARRIER GLANDS	2110-69-R701PO-038		163	15
BRIBOND SIGNS LTD	NAMEPLATES	2110-69-R90-PO-042		164	15

PROJECT NO 2110

VENDOR DATA VOLUME 3

VENDOR	DESCRIPTION	P.O. NUMBER	ITEM NO	SECTION NO	BOOK NO
BRODRENE STEEN HANSEN	ALARM FLASHING LIGHTS	2110-69-R66-PO-036		165	15
CABLOCK CO	CABLE CLEATS	2110-69-R34-PO-010		166	15
ANDREW CHALMERS	FLOODLIGHTS	2110-69-R21-PO-018		167	15
CITY ELECTRICAL FACTORS	MATTING SAFETY EQUIPMENT RELAYS INDICATOR LIGHTS	2110-69-R71/72/74/ 76/81-PO-039		168	15
C.M.P. GLANDS	GLANDS	2110-69-R62-PO-031		169	15
DANIEL INDUSTRIES	ILLUMINATORS	2110-69-R54-PO-023		170	15
DELTA ENFIELD	CABLE	2110-69-R02/03-PO-012		171	15
EDMUNDSONS	CABLE	2110-69-R01/2/3-PO-002		172	15
EDMUNDSONS	ELECTRICAL	2110-69-R69RVAR-PO-003		173	15
ERICO EUROPA	CONNECTORS	2110-69-R13-PO-013		174	15
EXEM (DOMINIT) LTD	ELECTRICAL FITTINGS	2110-69-R05-PO-015		175	15
GREEINIGS	CABLE TRAY	2110-69-R32-PO-011		176	15
HAWKE CABLE	MULTI CABLE TRANSITS	2110-69-R38-PO-026		177	15
HEATRAE	HEATER	2110-69-R33-PO-006		178	15
HUSBANDS SHIPYARDS	DISTRIBUTION BOARDS	2110-69-R51-PO-024		179	15
ISOPAD LTD	TRACE HEATING EQUIPMENT	2110-69-R30-PO-001		180	15
KLIPPON	MATERIALS	2110-69-R53-PO-021		181	15
A. LATTER	INDICATORS	2110-69-R52-PO-020		182	15
M & C SWITCHGEAR LTD	FLAMEPROOF SWITCHES	2110-69-R58-PO-029		183	15
MARDALE CONTROLS	CONTROL PANEL	2110-69-R50-PO-022		184	15
MARTIN & LUNEL	SOCKET OUTLETS	2110-69-R12-PO-004		185	15
MOGUL ELECT	TY RAPS	2110-69-R61-PO-028		186	15

PROJECT NO 2110

VENDOR DATA NUMBER 3

VENDOR	DESCRIPTION	P.O.NUMBER	ITEM NO	SECTION	BOOK NO
PIRELLI GENERAL	CLAMPS	2110-69-R60-PO-030		187	15
SIMPLE DE LTD	JUNCTION BOXES	2110-69-R57-PO-025		188	15
SYBERG & SYBERG	TRANSIT FRAMES & BLOCKS	2110-69-R84-PO-040		189	15
THOMAS & BELTS	TY RAPS	2110-69-R61-PO-027		190	15
VESTEC LTD	BOX	2110-69-R39-PO-016		191	15
WARWICK MIM	CABLE LADDER	2110-69-R04-PO-005		192	15
ALLEN WEST	GLAND PLATES	2110-69-R73-PO-037		193	15
WHOLESALE FITTINGS	RECTANGULAR & CIRCULAR JUNCTION BOXES	2110-69-R86/87-PO-041		194	15
	CATEGORY 70 & 79 INSTRUMENTATION				
A.F.A. MINERVA	FIRE DETECT SYSTEM	2110-70-R17-PO-007	A1C -2, A1C - 2-1 AE -2 -1	195	15
A.E.P. INT	SWITCHES	2110-70-R99-PO-046		196	15
J AGAR	GAS DENSITY METERS	2110-70-R105-PO-058		197	15
J AGAR INSTRUMENT	MEASURING SYSTEM	2110-70-R74-PO-035		197 contd	16
AMOT CONTROLS	PNEUMATIC ANNUNCIATOR	2110-70-R37-PO-020	A-AN-1	198	16
AMOT CONTROLS	PNEUMATIC RELAY BOX	2110-70-R59-PO-037		198	16
ASCO DEWRANCE CONT	SOLENOID VALVES	2110-70-R77-PO-036		199	16
AURIEMA	FLOW SWITCH	2110-70-R101-PO-054		200	16
AUXITROL	PRESSURE GAUGES	2110-70-R31-PO-013	LI VI3-I	201	16
AUXITROL	PRESSURE GAUGES	2110-70-R84-PO-042	PI-IFT-1, 2 & 3	201	16
W H BAILEY	RELIEF VALVES	2110-70-R28-PO-006	PSV-V5-4, 5 & 7 PSV-V3-5x, 6x & 7 PSV-P14-1 & 2 PSV-M3 -1 PSV-P12-3 & 4 PSV-V34 A & B - 2	202	16

PROJECT NO 2110

VENDOR DATA VOLUME 3

VENDOR	DESCRIPTION	P.O. NUMBER	ITEM NO	SECTION NO	BOOK NO
BECKMAN/COMSIP	MOISTURE ANALYSER	2110-70-R97-PO-051		203	16
BECKMAN/COMSIP	MOISTURE ANALYSER	2110-70-R13-PO-103		203	16
BRODRENE STEEN HANSEN	PUBLIC ADDRESS & ALARM SYSTEMS	2110-70-R55-PO-027		204	16
CAMCO	WATER MONITOR	2110-70-R47-PO-018		205	16
CAMCO LTD	GAS FLOW COMP	2110-70-R110-PO-067		205	16
COMSIP	CONTROL PANELS	2110-70-R14-PO-005		206	16
COMSIP	DIESEL DAY TANK PANEL	2110-70-R40-PO-021		206	16
COMSIP	INTERFACE ROOM RACKS	2110-70-R86-PO-043		206	16
COMSIP	INSTRUMENT RACK	2110-70-R122-PO-063		206	16
CONTROLEC	EQUIPMENT	2110-70----PO-076		207	16
CONTROLEC	MOISTURE ANALYSER PANEL	2110-70-R103-PO-050		207	16
COPPAS INTERNATIONAL	SOLENOID VALVES	2110-70-R94-PO-044		208	16
DANIEL INDUSTRIES	MAGNETROL SWITCHES	2110-70-R18-PO-004		209	16
DANIEL INDUSTRIES	FABRICATED METER RUN	2110-70-R27-PO-001		209	16
DANIEL INDUSTRIES	JUNIOR ORIFICE FITTINGS	2110-70-R32-PO-012		209	16
DANIEL INDUSTRIES	GAUGE GLASSES	2110-70-R41-PO-023		209	16
DANIEL INDUSTRIES	TURBINE METER INDICATORS	2110-70-R51/53-PO-019	FT-4V-1A & B FT-VH-2, FT V12-1 FQ1-P12-1 FQ1-V12-4/1A & B FT-V4-1C/FQ1-V4-1C	209	16
DRESSER EUROPE	THERMO METERS	2110-70-R48-PO-022	TI-E4A-1, TI E4B-1 TI E4C-1	210	16
DRESSER EUROPE	THERMO METERS	2110-70-R126-PO-065		210	16

VENDOR	DESCRIPTION	P. O. NUMBER	ITEM NO	SECTION NO	BOOK NO
R.E. ENFIELD	SAMPLE PROBES	2110-70-R138-PO-082		211	16
EUROFILCO	PIG SIGNALS	2110-70-R72-PO-033		212	16
EUROFILCO	PIG SIGNALS	2110-70-R97-PO-047		213	16
FISCHER PORTER	FLOW METERS	2110-70-R100-PO-052		213	16
FLOW CONTROL	FIRE WATER DELUGE VALVES	2110-70-R23-PO-008		214	16
FOXBORO/CONSIP	CONTROLLERS	2110-70-R114/115-PO-057		215	17
FOXBORO	TRANSMITTERS	2110-70-R116-PO-060		215	17
FOXBORO	CURRENT AIR TRANSMITTER	2110-70- R44-PO-026		215	17
GAS OIL & CONSTRUCTION	MANHOLE COVERS	2110-70-R14/15-PO-003		216	17
G.E.C. ELLIOTT	LEVEL CONTROLLERS	2110-70-R14/15-PO-003	A-LC-VIA-1 & 5 A-LC-VIC-1 & 5 A-LC V3-2 & 5 A-LSH-VIA-6A A-LS11-VIB-7A A-LSLL-VIC-7A A-LSH-VS-2A A-LC-V2A,B & C14 A-LSH-VIC-6A A-LSLL-V2A-5A A-LSH-V2A-2A A-LSL-V2B-1A A-LSH-V6-2A A-LC-V6-1 A-LSLL-VIA-7A A-LSH-V2C-5A A-LSH-V2C-2A A-LSH-V3-1A A-LSH-V4-1A A-LSH-V24-3A & 4A A-LC-VIB1 & 5 A-LSL-VIB-2A & 6A A-LC-V24-1 & 2 A-LSHH-VIA-8A A-LSHH-VIB-8A A-LSL-VIC-2A A-LSH-V33-5A A-LC-V4-2 A-LSHH-VIC-8A S-LSL-V2A-1A A-LSLL-V2B-5A A-LSH V2B-2A ALCV5-7 A-LC-V7-2 A-LSL-VIA-2A A-LSL-V2C-1A A-LSL-V3-3A A-LSL-V4-4A A-LSL-V5-1A	217	17

VENDOR	DESCRIPTION	P.O. NUMBER	ITEM NO	SECTION NO	BOOK NO
G.E.C. ELLIOTT	CONTROL VALVES	2110-70-R21-PO-002	FCV-V2A-2A,BC&D FCV-V28-2ABC&D FCV-V2C-2A,BC&D LCV-VIA-1 & 5 LCV-VIB-1 & 5 LCV-VIC 1 & 5 LCV-V2C-4 LCV V7-2 PCV-V6-2 TCV-V2C-2 LCV-V3-2 LCV-V24-1 PCV-P6A-3 LCV-3A-5A LCV-V2A-4 LCV-V4-2 PCV-V3-3 PCV P6B-3 LCV-V3-5B LCV-V2B-4 LCV-V5-7 PCV-V3-4 TCV-V2A-2 LCV-V6-1 PCV-V6-1 TCV-V2B-2 ESDV-VIA-5 & 6 ESDV-VIB-5 & 6 ESDV-VIC-5 6 &7 ESDV-V2A-3 & 8 ESDV-V2B 3 & 8 ESDV-V2C-3,6,7&8 ESDV-M1 & 2-3 PCV-Q5-5 & 8 PCV-V33-3A & B	217	17
G.E.C. ELLIOTT	VALVE	2110-70-R152-PO-089		217	17
G.E.C. ELLIOTT	3 WAY PILOT VALVES	2110-70-R22- PO-010	PV-V3-1X	217	17
G.E.C. ELLIOTT	AIR PILOT VALVES	2110-70-R140-PO-008		217	17
G.E.C. ELLIOTT	AIR VOLUME TANKS	2110-70-R24-PO-011	A-XV-P6-5,6,7,8 & 9 A-XV-P6-10, 11, 12 & 13 A-XV-P6-14, 15, 16, 17 & 18 A-XV-P6-18, 19 & 1 A-XV-ESD-1		
G.X. ENGINEERING	AIR FILTER/REGULATOR	2110-70-R82/83-PO-041		218	17
HADEN FIRE PROTECTION	PRESSURE OPERATED RELIEF VALVES	2110-70-R25-PO-016		219	17
HEECO LTD	ORIFICE PLATES	2110-70-R73-PO-032		220	17
HELIPEBS CONTROLS	PNEUMATIC M VALVES	2110-70-R26-PO-009	AHS-P6-9 & 20	221	17
ISOPAD	THERMOSTATS	2110-70-R107-PO-056		222	17
ITT & MTI (COMSIP)	ALARM RELAY CABINETS	2110-70-R57-PO-111		223	17
WALTER KIDD	HAND SWITCHES	2110-70-R79-PO-039		224	17
LAUTRETTE IND	FLANGES	2110-70-R127-PO-073		225	17
LOBA	PRESSURE SWITCHES	2110-70-R35-PO-030	PSH-V4-8 & 9 PS-P14-7, 8 & 9	226	17

PROJECT NO 2110

VENDOR DATA VOLUME 3

VENDOR	DESCRIPTION	P.O. NUMBER	ITEM NO	SECTION NO	BOOK NO
MARSTON EXCELSIOR	BURSTING DISC EQUIPMENT	2110-70-R34-PO-014		227	18
MARSTON EXCELSIOR	SAFETY DISCS	2110-70-R34-PO-048	PSE-V24-4 PSE-V8-1	227	18
NORTH SEA DRILLING	PILOT OPERATED RELIEF VALVES	2110-70-R33-PO-017		228	18
OTIS PRESSURE	FUSIBLE PLUGS	2110-70-R130-PO-072		229	18
OXYFLUID CONTROLS	RELAYS	2110-70-R65/67-PO-029		230	18
POKE INT	FILTERS	2110-70-R106-PO-053		231	18
P P CONTROLS	PRESSURE SWITCHES	2110-70-R112-PO-059		232	18
P.S.I. LTD	INSTRUMENT ENCLOSURES	2110-70-R80-PO-038		233	18
P.S.I LTD	INSTRUMENT ENCLOSURES	2110-70-R85-PO-045		233	18
P.S.I. LTD	INSTRUMENT ENCLOSURES	2110-70-R121-PO-062		233	18
B RHODES & SONS LTD	FLOW INDICATORS	2110-70-R71-PO-034	FGP6A1 FGP6B1	234	18
ROSEMOUNT ENG	THERMOCOUPLES & THERMOWELLS	2110-70-R70-PO-031		235	18
SCAMA LTD	ALARM ANNUNCIATORS	2110-70-R108-PO-055		236	18
SERCO RYAN	VALVES	2110-70-R104-PO-040		237	18
SEVERN INSTRUMENT	CHOKE VALVES	2110-70-R56-PO-024	SP-5-A1,2 & 3 SP-5-B1,2,3,4,5 & 6 SP-5-C1 & 2 SP-5-D1 SP-5-E1 & 2	238	18
J S SIEGER (G C DAVIS) SIEGAR LTD	GAS DETENTION SYSTEM	2110-70-R16-PO-015		239	18
THERMOPOCKET ENGINEERING LTD	THERMOWELLS	2110-70-R125-PO-064		240	18
VALTEK ENGINEERING	CONTROL VALVES	2110-70----PO-071		241	18
VISUAL ENGINEERS	MANOMETERS	2110-70-R119-PO-068		242	18

VENDOR	DESCRIPTION	P.O. NUMBER	ITEM NO	SECTION NO	BOOK NO
WESTING HOUSE	RAPID EXHAUST VALVE	2110-70-R132-PO-075		243	18
WHESSOE LTD	BREATHER VALVES	2110-70-R43-PO-025		244	18
WHESSOE LTD	RELIEF VALVES	2110-70-R62-PO-028	PSV-VSS-Y	244	18
WILLIAN & JAMES	PNEUMERSTAT	2110-70-R123-PO-066		245	18
WILLIS OIL TOOL	MONITOR PILOT	2110-70-R95-PO-049	PV-V2C-6	246	18
ARNE AANESTAD	CHANNEL SECTION	2110-79-R31-PO-052		247	18
ARNE AANESTAD	STEEL PLATE	2110-79-R32-PO-043		247	18
ASHFORD CONTROLS	VALVE MANIFOLDS	2110-79-R21-PO-005		248	18
ASHFORD CONTROLS	NEEDLE VALVES	2110-79-R27-PO-016		248	18
ASHFORD CONTROLS	NEEDLE VALVES	2110-79-R29-PO-026		248	18
BECK CRESPEL	NUTS BOLTS & WASHERS	2110-79-R45-PO-027		249	18
BRITISH INSULATED CALLENDER CABLES	CABLE STRAPPINGS	2110-79-R43-PO-020		250	18
R G BROWN	SS TUBING	2110-79----PO-047		251	18
R G BROWN	TUBING	2110-79-R01-PO-001		251	18
BROWNALL LTD	COMPRESSION FITTINGS	2110-79-R02-PO-051		252	18
BROWNLIE & MURRAY	STEEL WORK	2110-79-R67-PO-001		253	18
BRUN FRERES LTD	MILD STEEL PLATE	2110-79-R32-PO-015		254	18
CABLOCK LTD	CABLE	2110-79-R61-PO-044		255	18
CABLOCK	CABLE CLEATS	2110-79-R66-PO-002		255	18
DELTA ENFIELD	CABLE	2110-79-R39-PO-029		256	18
GAS OIL & CONSTRUCTION	STAINLESS STEEL TUBING	2110-79-R01-PO-025		257	18
GAS OIL & CONSTRUCTION	SWAGE LOCK FITTINGS	2110-79-R02-PO-006		257	18
GAS OIL & CONSTRUCTION	CARBON STEEL PIPE	2110-79-R-4-PO-012		257	18
GAS OIL & CONSTRUCTION	SWAGE LOCK FITTINGS	2110-79-R17-PO-006		257	18
GAS OIL & CONSTRUCTION	ANGLE CHANNEL	2110-79-R30-PO-031		257	18

PROJECT NO 2110

VENDOR DATA VOLUME 3

VENDOR	DESCRIPTION	P.O. NUMBER	ITEM NO	SECTION NO	BOOK NO
GAS OIL & CONSTRUCTION	ANGLE CHANNEL	2110-79-R31-PO-031		257	18
GAS OIL & CONSTRUCTION	DRIP POTS	2110-79-R40-PO-030		257	18
GAS OIL & CONSTRUCTION	STEEL TUBES	2110-79-R102-PO-037		257	18
GAS OIL & CONSTRUCTION	PIPES & FITTINGS	2110-79-R103-PO-035		257	18
GAS OIL & CONSTRUCTION	PIPES & FITTINGS	2110-79-R105-PO-035		257	18
GAS OIL & CONSTRUCTION	PIPE & FITTINGS	2110-79-R106-PO-035		257	18
G.X. ENGINEERING	AIR FILTERS	2110-79-R62-PO-036		258	18
HAWKE CABLE GLANDS LTD	GLANDS	2110-79-R33-PO-017		259	18
HAWKE CABLE GLANDS LTD	TRANSIT FRAMES	2110-79-R60-PO-042		259	18
HAWKE CABLE GLANDS LTD	CONVERTION KITS	2110-79-R69-PO-049		259	18
HECCO INTERNATIONAL	MONEL SPACE PLATES	2110-79-R03-PO-050		260	18
HOKE INTERNATIONAL	COMPRESSION FITTINGS	2110-79-RT-PO-049		261	18
(IVCO) WORCESTER VALVES	VALVES	2110-79-R24-PO-011		262	18
IVCO LTD	VALVES	2110-79-R100-PO-040		262	18
KLIPPON ELECTRICAL	JUNCTION BOXES	2110-79-R08-PO-028		263	18
KLIPPON ELECTRICAL	ELECTRICAL ITEMS	2110-79-R39-PO-007		263	18
C.A.NORGREN	AIR SETS	2110-79-R06-PO-023		264	18
SAUNDERS VALVES	VALVES	2110-79-R07-PO-013		265	18
J SMITH	BRASS PIPE	2110-79-R107-PO-045		266	18
STERLING CABLE CO	CABLE	2110-79-R64-PO-039		267	18
STERLING CABLE CO	COPPER CABLE	2110-79-R38-PO-022		267	18
SWIFTS OF SCARBOROUGH	CABLE TRAY	2110-79-R44-PO-019		268	18
TECHMATION	FITTINGS	2110-79-R101-PO-041		269	18
TECHMATION	FITTINGS	2110-79-R108-PO-014		269	18
THEVIGNOT	BALL VALVES	2110-79-R23-PO-034		270	18

VENDOR	DESCRIPTION	P.O. NUMBER	ITEM NO	SECTION	BOOK NO
THEVIGNOT (A.J. WATERS)	HAND BALL VALVES	2110-79-R28-PO-021		270	18
TROUVAY & CAUVIN	CARBON STEEL PIPE	2110-79-R05-PO-018		271.	18
TROUVAY & CAUVIN	VALVES & FITTINGS	2110-79-R11-PO-053		271	18
TROUVAY & CAUVIN	PIPE & FITTINGS	2110-79-R11-PO-014		271	18
TROUVAY & CAUVIN	CARBON STEEL FITTINGS	2110-79-R12-PO-010		271	18
TROUVAY & CAUVIN	CARBON STEEL FITTINGS	2110-79-R13-PO-010		271	18
TROUVAY & CAUVIN	PIPE FITTINGS	2110-79-R15-PO-009		271	18
TROUVAY & CAUVIN	FLANGES	2110-79-R18-PO-024		271	18
TROUVAY & CAUVIN	CARBON STEEL	2110-79-R26-PO-008		271	18
TROUVAY & CAUVIN	PIPE FITTINGS	2110-79-R56-PO-032		271	18
VALVATEC LTD	BALL VALVES	2110-79-R24-PO-054		272	18
WANDLESIDE CABLES	CABLE	2110-79-R41-PO-033		273	18
WEIR PACIFIC	CARBON STEEL BALL VALVES	2110-79-R23-PO-003		274	18
WEIR PACIFIC	CARBON STEEL BALL VALVES	2110-79-R25-PO-003		274	18
WHOLESALE FITTINGS	CABLE	2110-79-R39-PO-038		275	18
WHOLESALE FITTINGS	JUNCTION BOXES	2110-79-R53-PO-046		275	18
HENRY WIGGIN	MONEL TUBING	2110-79-R16-PO-002		276	18
ARNOLD WRAGG	BOLTS & NUTS	2110-79-R34/35/36/37-PO-004		277	18
	CATEGORY - MISCELLANEOUS				
HULLES RENAULT	OIL FOR COMMIS	2110-90----PO-008		278	18
BROM SUPPLIES	MANUAL TYPEWRITER	2110-90----PO-009		279	18

TP1 JOB BOOK

VOLUME 4

CONTRACT AND FINANCIAL STATEMENT

TABLE CONTENTS OF VOLUME 4

		Book No.
SECTION 1	Main Contract	
	Between Elf Norge and Prime Contractor McDermott Hudson.	1
SECTION 2	Contracts AwardedBy Elf Norge and managed by McDermott Hudson (CMP,UIE,SBV) and other Contracts (like Wagley, Fieldco,Comsip -Hook-up Contracts	1
2.1	List of contracts,table of contents,place of each part of the contract in the Job Book.	
2.2	Contractors (contractual part only)	
SECTION 3	Purchase Orders	1
3.1	Purchase Orders register	1
3.2	Purchase orders	1,2,3,4,56
SECTION 4	The Final Statement of Costs	6

Index of Documents

DISTRIBUTION OF JOB BOOKS

Destination	Vol. 1	Other Volumes (2,3,4,5)	
TCP2, TP1 and OP.			
M Curutchet, Elf-Norge Group Frigg Tour Franklin, Cedex No. 11, 92081 Paris La Defense FRANCE	X		
M Laffont/Gregoire Elf-Norge Group Frigg, Tour Franklin, Cedex No. 11, 92081 Paris La Defense FRANCE	X	X	
M Laffont, Technip, c/o Elf-Norge Group Frigg, Tour Franklin, Cedex No. 11, 92081 Paris La Defense FRANCE	X	X	
M Tartera, Elf Aquitaine Norge o be sent P O Box 168 eparately) 4001 Stavanger, NORWAY	X	X	
M Pol/De Saint Palais Elf Aquitaine Norge Production P O Box 168 Department 4001 Stavanger, NORWAY	X	X	
M Rouilloux, Elf Aquitaine Norge P O Box 168 4001 Stavanger, NORWAY	X	X	
. Olderkjaer Elf Aquitaine Norge Central P O Box 168 Filing, 4001 Stavanger, NORWAY	X	X	

Destination	Vol. 1	Other Volumes (2,3,4,5)	
M Guerin Villaubreuil Elf, UK Limited Knightsbridge House 197 Knightsbridge London S.W.7 1RZ	X		
Mr Dorgebray, Elf Aquitaine Norge A/S Hillevaagsveien 12 4000 Stavanger Norway	X	X	
Offshore Production Filing on QP Production Elf Aquitaine Norge P O Box 168 4001 Stavanger, NORWAY C/O Mr. Letourmy	X	X	
M Veibust Spare Copy Purchase Elf Aquitaine Norge Department P O Box 168 4001 Stavanger, NORWAY	X 5 copies	X	
TCP2 ONLY			
M R Guillo Elf Aquitaine Norge A/S Start Up P O Box 168 Department 4001 Stavanger, NORWAY Onshore Offshore	X X	X X	
Y Wautelet Elf Aquitaine Norge A/S Hook-Up Consul Sigvald Bergesen Vei Supervision Hillevaag/4000 Stavanger Onshore Norway Offshore	X X	X X	
Strat Sofresid Maintenance 59 rue de la Republique Manual 93108 Montreuil sous Bois Updating Paris FRANCE	X	X	