VIEW 1.1.

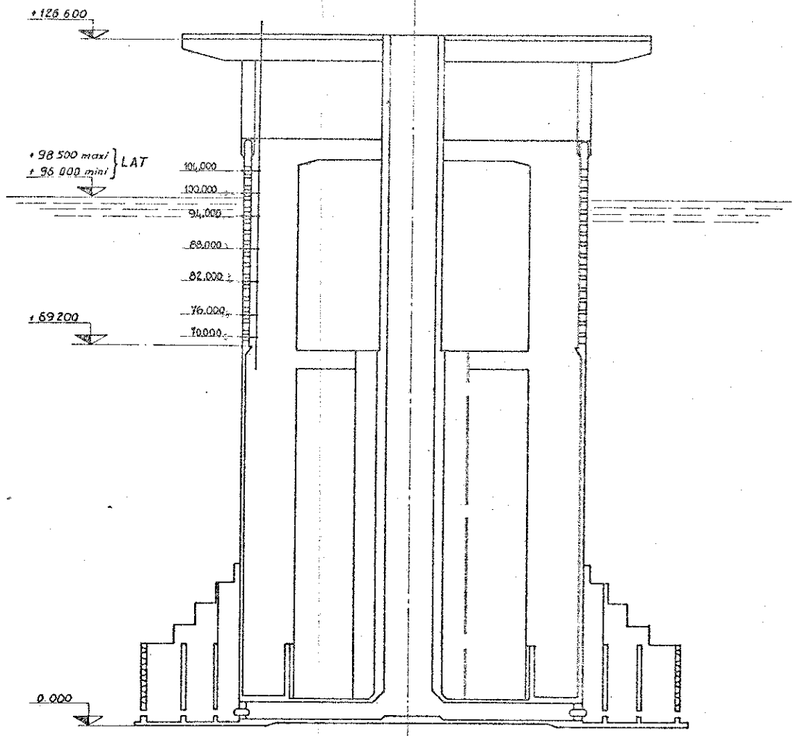

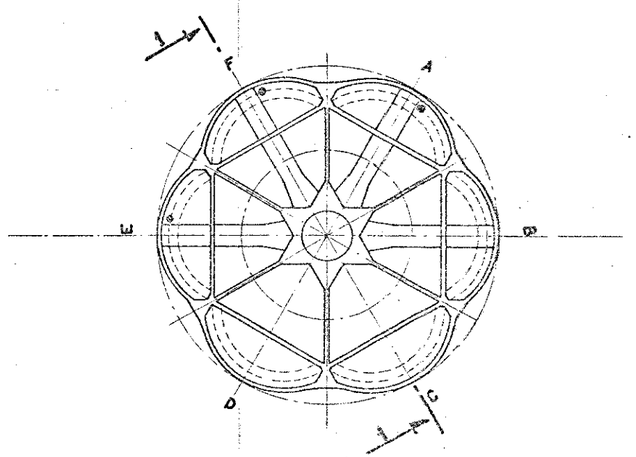

THE INFORMATION CONTAINED IN THIS DOCUMENT MUST BE CONSIDERED AS AN INDUSTRIAL SECRET AND THE PROPERTY OF COMPAGNIE GENERALE DORIS IT CANNOT BE COMMUNICATED TO ANY THIRD PERSON OR ANYONE NOT DIRECTLY CONCERNED WITHOUT THE FORMAL AGREEMENT OF THE MANAGING DIRECTOR OF THIS COMPANY. THE HOLDER OF THE DOCUMENT WILL BE HELD RESPONSIBLE FOR ALL DEVIATIONS FROM THIS SERVICE.

REFERENCE DRAWINGS		REV NO	REVISION	BY	DATE	CKD
NUMBER	TITLE	1	for approval	PA	3.2.76	

C.G DORIS
John Howard

TOTAL OIL MARINE LIMITED
LONDON

Frigg field to Scotland pipe line
Intermediate manifold platform

660 01 352

VIEW ELEVATION For pipe 8"

	DRAWN	CHECKED	CHECKED	APPROVED	SCALE	PROJECT Nº	DRAWING NUMBER	REV
BY	P.A				1/250		AIMPM 1242	1
DATE	10.2.76							